DOCKET

SUPREME COURT
OF THE UNITED STATES

No. 12-1184
Title: Octane Fitness, LLC, Petitioner
v.
ICON Health & Fitness, Inc.
Docketed: March 29, 2013
Lower Ct: United States Court of Appeals for the Federal Circuit
Case Nos.: (2011-1521, 2011-1636)
Decision Date: October 24, 2012
Rehearing Denied: December 27, 2013
Questions Presented

~~Date~~~	~~~~~~~Proceedings and Orders~~~~~~~~~~~~~~~~~~~~
Mar 27 2013	Petition for a writ of certiorari filed. (Response due April 29, 2013)
Apr 19 2013	Order extending time to file response to petition to and including May 29, 2013.
May 29 2013	Brief of respondent ICON Health & Fitness, Inc. in opposition filed.
Jun 4 2013	DISTRIBUTED for Conference of June 20, 2013.
Jun 6 2013	Reply of petitioner Octane Fitness, LLC filed. (Distributed)
Jun 26 2013	DISTRIBUTED for Conference of September 30, 2013.
Oct 1 2013	Petition GRANTED.
Oct 31 2013	Blanket consent to the filing of amicus curiae briefs, in support of either party or of neither party, received from counsel for the petitioner and counsel for the respondent.
Nov 6 2013	The time to file the joint appendix and petitioner's brief on the merits is extended to and including December 2, 2013.
Nov 6 2013	The time to file respondent's brief on the merits is extended to and including January 17, 2014.
Nov 25 2013	SET FOR ARGUMENT ON Wednesday, February 26, 2014
Dec 2 2013	Brief of petitioner Octane Fitness, LLC filed.
Dec 2 2013	Motion to file the joint appendix under seal with redacted copies for the public record filed by petitioner Octane Fitness, LLC.
Dec 2 2013	Joint appendix filed. (Redacted copy)
Dec 4 2013	Record received from U.S.C.A. Federal Circuit. (1 Box)
Dec 6 2013	Brief amici curiae of Robin Feldman, and U.C. Hastings Institute for Innovation Lawin support of either party filed.
Dec 9 2013	Brief amicus curiae of BSA - The Software Alliance filed.
Dec 9 2013	Brief amicus curiae of American Intellectual Property Law Association in

	support of neither party filed.
Dec 9 2013	Brief amici curiae of Google Inc., et al. filed. VIDED (see 12-1163).
Dec 9 2013	Brief amicus curiae of Apple Inc. in support of neither party filed. VIDED (see 12-1163).
Dec 9 2013	Brief amici curiae of Electronic Frontier Foundation, et al. filed.
Dec 9 2013	Brief amicus curiae of Food Marketing Institute filed.
Dec 9 2013	Brief amicus curiae of Intellectual Property Owners Association filed.
Dec 9 2013	Brief amici curiae of Computer & Communications Industry Association, et al. filed.
Dec 9 2013	Brief amici curiae of Vermont, et al. filed.
Dec 9 2013	Brief amicus curiae of Intellectual Property Law Association of Chicago in support of neither party filed.
Dec 9 2013	Brief amici curiae of Yahoo! Inc., et al. filed. VIDED.
Dec 9 2013	Brief amicus curiae of United States filed.
Dec 9 2013	Brief amici curiae of 3M Co., et al filed.
Dec 9 2013	Brief amicus curiae of New York Intellectual Property Law Association in support of neither party filed.
Dec 11 2013	Motion DISTRIBUTED for Conference of January 10, 2014.
Dec 12 2013	Record received from U.S.D.C. District of Minnesota (1 Box) The record is SEALED. Record also received from U.S.D.C. District of Minnesota (1 Envelope).
Dec 23 2013	Motion of the Solicitor General for leave to participate in oral argument as amicus curiae and for divided argument filed.
Jan 13 2014	Motion to file the joint appendix under seal with redacted copies for the public record GRANTED.
Jan 17 2014	CIRCULATED.
Jan 17 2014	Brief of respondent ICON Health & Fitness, Inc. filed. (Distributed)
Jan 27 2014	Motion of the Solicitor General for leave to participate in oral argument as amicus curiae and for divided argument GRANTED.
Feb 18 2014	Reply of petitioner Octane Fitness, LLC filed. (Distributed)
Feb 26 2014	Argued. For petitioner: Rudolph A. Telscher, Jr., St. Louis, Mo.; and Roman Martinez, Assistant to the Solicitor General, Department of Justice, Washington, D. C. (for United States, as amicus curiae.) For respondent: Carter G. Phillips, Washington, D. C.
Apr 29 2014	Judgment REVERSED and case REMANDED. Sotomayor, J., delivered the opinion of the Court, in which Roberts, C. J., and Kennedy, Thomas, Ginsburg, Breyer, Alito, and Kagan, JJ., joined, and in which Scalia, J., joined except as to footnotes 1-3.

PETITION FOR WRIT OF CERTIORARI

12 1184

No. 12-

MAR 2 7 2013

IN THE

Supreme Court of the United States

OCTANE FITNESS, LLC,

Petitioner,

v.

ICON HEALTH & FITNESS, INC.,

Respondent.

ON PETITION FOR A WRIT OF CERTIORARI TO THE UNITED STATES COURT OF APPEALS FOR THE FEDERAL CIRCUIT

PETITION FOR A WRIT OF CERTIORARI

RUDOLPH A. TELSCHER, JR.,
Counsel of Record
KARA R. FUSSNER
HARNESS, DICKEY & PIERCE, PLC
7700 Bonhomme Avenue,
Suite 400
St. Louis, MO 63105
(314) 726-7500
rtelscher@hdp.com

Attorneys for Petitioner,
Octane Fitness, LLC

246465

COUNSEL PRESS

(800) 274-3321 • (800) 359-6859

QUESTION PRESENTED

1. Does the Federal Circuit's promulgation of a rigid and exclusive two-part test for determining whether a case is "exceptional" under 35 U.S.C. § 285 improperly appropriate a district court's discretionary authority to award attorney fees to prevailing accused infringers in contravention of statutory intent and this Court's precedent, thereby raising the standard for accused infringers (but not patentees) to recoup fees and encouraging patent plaintiffs to bring spurious patent cases to cause competitive harm or coerce unwarranted settlements from defendants?

PARTIES TO THE PROCEEDING AND CORPORATE DISCLOSURE STATEMENT

The Plaintiff-below is Icon Health & Fitness, Inc. ("Icon).

The Defendant-below/Petitioner is Octane Fitness, LLC ("Octane"). Octane is wholly owned by OF Holdings, Inc.

TABLE OF CONTENTS

Page

QUESTION PRESENTED i

PARTIES TO THE PROCEEDING AND CORPORATE DISCLOSURE STATEMENT ii

TABLE OF CONTENTS iii

TABLE OF APPENDICES v

TABLE OF CITED AUTHORITIES vi

OPINIONS BELOW 1

BASIS FOR THIS COURT'S JURISDICTION 1

STATUTE INVOLVED 2

STATEMENT OF THE CASE 2

a. Octane and Its Commercially-Successful Elliptical Machines 4

b. Icon and the Commercially Defunct Elliptical Machine Claimed in the '710 Patent 5

c. The '710 Patent 6

d. The Linkage System of Octane's Elliptical Machines 9

e. The Lawsuit 11

Table of Contents

Page

ARGUMENT.....17

I. The standard for awarding fees to a prevailing accused infringer has strayed from the statutory "exceptional case" mandate, resulting in a standard that is near-impossible to meet, and serves no deterrent value 20

II. There is no basis in the statute, this Court's precedent, or policy for a standard that requires a higher showing by prevailing accused infringers versus prevailing patentees 26

III. The "exceptional case" standard for a prevailing accused infringer should allow district courts discretion to award fees in any case in which the patentee unreasonably pursues a case having an objectively low likelihood of success.....33

A. Exceptional case status should not require proof of a Rule 11 violation.....33

B. Exceptional case status should not require proof of bad faith.....35

CONCLUSION 37

TABLE OF APPENDICES

Page

APPENDIX A — ORDER OF THE UNITED STATES COURT OF APPEALS FOR THE FEDERAL CIRCUIT, FILED JANUARY 7, 2013 ..... 1a

APPENDIX B — JUDGMENT OF THE UNITED STATES COURT OF APPEALS FOR THE FEDERAL CIRCUIT, FILED JANUARY 7, 2013 ..... 18a

APPENDIX C — MEMORANDUM OPINION AND ORDER OF THE UNITED STATES DISTRICT COURT, DISTRICT OF MINNESOTA, FILED SEPTEMBER 6, 2011 ... 19a

APPENDIX D — JUDGMENT OF THE UNITED STATES DISTRICT COURT, DISTRICT OF MINNESOTA, FILED JULY 15, 2011 ..... 29a

APPENDIX E — MEMORANDUM OPINION AND ORDER OF THE UNITED STATES DISTRICT COURT, DISTRICT OF MINNESOTA, FILED JUNE 17, 2011 ..... 31a

APPENDIX F — MEMORANDUM OPINION AND ORDER OF THE UNITED STATES DISTRICT COURT, DISTRICT OF MINNESOTA, FILED DECEMBER 22, 2010 ... 62a

APPENDIX G — ORDER DENYING PETITION FOR REHEARING AND REHEARING *EN BANC* OF THE UNITED STATES COURT OF APPEALS FOR THE FEDERAL CIRCUIT, DATED DECEMBER 27, 2012 ..... 87a

TABLE OF CITED AUTHORITIES

Page

CASES

Amsted Indus. Inc. v. Buckeye Steel Castings Co., 24 F.3d 178 (Fed. Cir. 1994) 27

Automated Bus. Cos. v. NEC America, Inc., 202 F.3d 1353 (Fed. Cir. 2000) 18

Bayer Aktiengesellschaft v. Duphar Int'l Research B.V., 738 F.2d 1237 (Fed. Cir. 1984) 21

Bilski v. Kappos, 130 S.Ct. 3218 (2010) 31

Brooks Furniture Mfg., Inc. v. Futailer Int'l, Inc., 393 F.3d 1378 (Fed. Cir. 2005) ..... *passim*

Central Soya Co., Inc. v. Geo. A. Hormel & Co., 723 F.2d 1573 (Fed. Cir. 1983) 18

Checkpoint Systems, Inc. v. All-Tag Security S.A., No. 2012-1085 (Fed. Cir. Mar. 25, 2013) 23

Eltech Sys. Corp. v. PPG Industries, Inc., 903 F.2d 805 (Fed. Cir. 1990) 21, 27, 29, 30

Cited Authorities

Page

Eon–Net LP v. Flagstar Bancorp,
653 F.3d 1314 (Fed. Cir. 2011) 23

Fogerty v. Fantasy, Inc.,
510 U.S. 517 (1994) 30

Forest Labs., Inc. v. Abbott Labs.,
339 F.3d 1324 (Fed. Circ. 2003) 20

Hartman v. Hallmark Cards, Inc.,
833 F.2d 117 (8th Cir. 1987) 36

Highmark, Inc. v.
Allcare Health Mgmt. Sys., Inc.,
687 F.3d 1300 (Fed. Cir. 2012), *rehearing denied* with opinion and dissent, 701 F.3d 1351 (Dec. 6, 2012) 20, 21, 23, 27

iLOR, LLC v. Google, Inc.,
631 F.3d 1372 (Fed. Cir. 2011) 23, 29

In re Ciprofloxacin Hydrochloride Antitrust Litig.,
544 F.3d 1323 (Fed. Cir. 2008) 31

In re Seagate Technology, LLC,
497 F.3d 1360 (Fed. Cir. 2007) 27

Machinery Corp. of America v. Gullfiber AB,
774 F.2d 467 (Fed. Cir. 1985) 27

Cited Authorities

Page

Marctec, LLC v. Johnson & Johnson,
07-CV-825-DRH, 2010 WL 680490
(S.D. Ill. Feb. 23, 2010) 18

Mathis v. Spears,
857 F.2d 749 (Fed. Cir. 1988).....18, 21

Multiform Desiccants, Inc. v. Medzam, Ltd.,
133 F.3d 1473 (Fed. Cir. 1998).....21

Phonometrics, Inc. v. Westin Hotel Co.,
350 F.3d 1242 (Fed. Cir. 2003) 29

Precision Instrument Mfg. Co. v.
Auto. Maint. Mach. Co.,
324 U.S. 806 (1945).....31

Professional Real Estate Investors v.
Columbia Pictures Industries,
508 U.S. 49, 113 S.Ct. 1920,
123 L.Ed.2d 611 (1993) 22, 23

Raylon v. Complus Data Innovations, Inc.,
700 F.3d 1361 (Fed. Cir. 2012).....29, 34

Rohm & Haas Co. v. Crystal Chem. Co.,
736 F.2d 688 (Fed. Cir. 1984) 22

S.C. Johnson & Son, Inc. v. Carter-Wallace, Inc.,
781 F.2d 198 (Fed.Cir. 1986) 27

Page

Sun-Tek Indus., Inc. v. Kennedy Sky Lites, Inc.,
929 F.2d 676 (Fed. Cir. 1991) 21

Transclean Corporation v.
Bridgewood Services, Inc.,
290 F.3d 1364 (Fed. Cir. 2002) 27

Zenith Radio Corp. v. Hazeltine Research, Inc.,
395 U.S. 100 (1969) 31

STATUTES

17 U.S.C. § 505 36

28 U.S.C. § 1254 1

28 U.S.C. § 1331 11

28 U.S.C. § 1338 11

35 U.S.C. § 284 35

35 U.S.C. § 285 ..... *passim*

42 U.S.C. § 1988 36

42 U.S.C. § 3613 36

Page

OTHER AUTHORITIES

Fed. R. Civ. P. 11 ..... 33, 34, 35

P.J. Federico, Commentary on the New Patent Act, Title 35, United States Code Annotated 22

F. Scott Kieff, *The Case for Preferring Patent-Validity Litigation Over Second-Window Review and Gold-Plated Patents: When One Size Doesn't Fit All, How Could Two Do the Trick?*, 157 U. Pa. L. Rev. 1937 (2009) 32

Michael J. Meurer, *Controlling Opportunistic and Anti-Competitive Intellectual Property Litigation*, 44 B.C. L. Rev. 509, 512 (2003) 25

S.Rep. 93-1400, 1974 U.S.C.C.A.N. 7134, 7135 36

S.Rep. No. 1503, 79th Cong., 2d Sess. (1946), *reprinted in* 1946 U.S.Code Congressional Service 1386, 13871 22

S.Rep. No. 1979, 82nd Cong., 2d Sess. (1952), *reprinted in* 1952 U.S.Code Cong. & Ad. News 2394, 2423 22

OPINIONS BELOW

The below-action was a patent infringement case in the District of Minnesota. The District Court for the District of Minnesota construed the asserted claims of the patent in a *Markman* decision that issued on December 22, 2010, is reported at 2010 WL 5376209, and is reproduced in the appendix to the Petition ("App.") at App. 62a-86a. The District Court for the District of Minnesota then granted summary judgment of non-infringement, in a decision that issued on June 17, 2011, is reported at 2011 WL 2457914, and is reproduced at App. 31a-61a. Octane then moved for attorney fees under 35 U.S.C. §285 (the subject of the current petition), and the District Court denied that motion in a decision that issued on September 6, 2011, is reported at 2011 WL 3900975, and is reproduced at App. 19a-28a.

Both decisions (the underlying summary judgment decision and the fee decision) were appealed to the Federal Circuit Court of Appeals. The opinion of the United States Court of Appeals for the Federal Circuit issued on October 24, 2012, and can be found at 2012 WL 5237021. App. 1a-17a. The order denying the petition for rehearing and rehearing en banc, dated December 27, 2012, is reproduced at App. 87a-88a.

BASIS FOR THIS COURT'S JURISDICTION

The opinion and judgment of the court of appeals issued on October 24, 2012. A timely petition for rehearing and rehearing en banc was denied on December 27, 2012. This Court has jurisdiction pursuant to 28 U.S.C. § 1254.

STATUTE INVOLVED

At issue in this case is 35 U.S.C. § 285, which states:

> "The court in exceptional cases may award reasonable attorney fees to the prevailing party."

STATEMENT OF THE CASE

The plaintiff in the underlying action was Icon Health and Fitness, Inc. ("Icon"), a larger manufacturer/seller of exercise equipment. In February 2000, Icon obtained U.S. Patent No. 6,019,710, entitled "Exercising Device with Elliptical Movement" ("the '710 patent"). The patent is directed to the linkage system of an elliptical machine. Though it sells elliptical machines, it was undisputed in the case below that Icon never sold a commercial product covered by the '710 patent and that the design disclosed in that patent was not commercially viable.

The defendant in the case below was Octane Health & Fitness ("Octane"), a much smaller start-up company. In 2001, Octane took a license from two prolific elliptical machine inventors, and designed two commercially successful lines of elliptical machines which were at issue below. These elliptical machines, which employ technology covered by patents that *pre-date* the '710 patent, employ a linkage which is nothing like that shown in the '710 patent.

Years after Octane introduced its elliptical machines to the market, Icon, in internal emails, recognized Octane's success and hatched a plan to extort royalties out of Octane with a weak patent case. As reflect in the

examples below, Icon took an "old patent . . .that was sitting on the shelf", and asserted it for competitive gain:

From: Pat McGinnis
Sent: Sunday, August 24, 2008 7:53 PM
To: Jeff Kazan; Adam Wilk
Subject: FW: SNEWS News Update for August 22

We are suing Octane. Not only are we coming out with a great product to go after them, but throwing a lawsuit on top of that.

Pat McGinnis
Vice President of Global Sales
FreeMotion Fitness
[illegible]
[illegible]
[illegible]

From: Pat McGinnis
Sent: Wednesday, September 18, 2008 2:53 PM
To: Adam Wilk
Subject: RE: I heard we are suing Octane!

Yes – old patent we had for a long time that was sitting on the shelf. They are just looking for royalties.

Pat McGinnis
Vice President of Global Sales

As found by the courts below, the '710 patent is directed to a linkage system having a "stroke rail" and one end of the rail must move in a linear path (the patent calls for "linear reciprocating displacement"). This limitation is recited by the Patent Office as a reason for allowance. Octane's machine, in addition to many stark differences, has no part that moves in a straight line, much less something that could be construed as a "stroke rail."

After Octane had spent over $1,300,000 defending itself through *Markman* and ultimately prevailing at summary judgment, the district court denied fees, finding that under the Federal Circuit's two-part test, the case was not "objectively baseless" or brought in "subjective

bad faith," even though no hearing was ever held to assess witness credibility. The Federal Circuit affirmed the grant of summary judgment (multiple claim limitations were lacking, as a matter of law, both literally and equivalently), but summarily affirmed the district court's fee decision, declining to reassess its fee standard. Further details of this case are set forth below.

a. Octane and Its Commercially-Successful Elliptical Machines

Octane is a Minneapolis company that was founded in 2004 by Tim Porth and Dennis Lee, two former executives from a large exercise company. (CTA App. A1665 at 10:6-21; A1670 at 6:15-20, 8:1-3). Sensing a void in the marketplace, both Mr. Porth and Mr. Lee had a vision of a company that focused solely on high-end elliptical exercise machines that are sold to fitness clubs, specialty fitness stores, and the like. (CTA App. A1668, 53:2-54:1).

At the outset of their business endeavor, Mr. Lee and Mr. Porth identified a specific linkage system that would form the basis of their elliptical machines and licensed that system, shown in U.S. Patent No. 6,248,044 ("the '044 patent"), from two prolific elliptical inventors, Ken Stearns and Joe Maresh. (CTA App. A1666, 34:9-36:14). Octane engineers then took that patented linkage system and developed Octane's lines of elliptical machines, including the Q45 and Q47 series machines that were ultimately at issue in the lower court case. (CTA App. A1667, 37:6-14). Notably, that technology largely *predates* the Icon patent asserted in the below case, which is discussed in more detail below.

Octane's Q45 and Q47 machines enjoyed great success in the marketplace. (CTA App. A1685, 69:18-A1686, 70:1). In addition to significant coverage in industry publications (CTA App. A1680-A1683), Octane enjoyed strong sales. (CTA App. A1687-A1688). For three years in a row, Octane was rated as the best elliptical supplier in the industry by a third party industry publication. (CTA App. A1678, 166:25-167:3; A1680-A1683).

b. Icon and the Commercially Defunct Elliptical Machine Claimed in the '710 Patent

Icon is the self-proclaimed "world's largest developer, manufacturer and marketer of fitness equipment." *See* www.iconfitness.com. However, with regard to elliptical machines, Icon primarily sells lower to mid-range elliptical machines, having had less success in the high-end elliptical machine market. (CTA App. A1674, 30:11-A1675, 35:17; A1676, 80:13-22; A1679, 187:16-188:11). The '710 patent-in-suit relates to one of Icon's commercially unsuccessful elliptical machine designs.

Icon filed the application resulting in the '710 patent on January 6, 1998. (CTA App. A87-A100). The '710 patent, entitled "Exercising Device with Elliptical Movement," describes and claims an elliptical exercise machine with a specific linkage system. (CTA App. A94, 2:22-58). Because of the specificity of the disclosed invention and narrowness of the claims contained in the application, Icon received a first office action allowance of the claims. (CTA App. A1695-A1697).

Icon never commercialized an elliptical machine under the '710 patent. (CTA App. A1607, 82:10-16; A1677, 148:17-

19; A1694, 54:13-15). After developing the machine and showing it to Icon's customers, no customers expressed sufficient interest in purchasing that type of elliptical. (CTA App. A1603, 26:20-A1604, 31:4; A1607, 84:9-12). Instead, Icon sold a different front drive elliptical machine that it did not invent, paying a royalty to a competitor on those sales. (CTA App. A1691, 185:11-A1692, 186:11).

c. The '710 Patent

In addition to a frame and foot rails (which all elliptical machines have), Claim 1 of the '710 patent, which is representative of the claims asserted by Icon, claims a linkage system comprising:

> c) a pair of *stroke rails* each having a first end and an opposing second end, *the second end of each stroke rail being hingedly attached to the first end of a corresponding foot rail*;
>
> (d) *means for connecting* each stroke rail to the frame *such that linear reciprocating displacement of the first end of each stroke rail results in displacement of the second end of each stroke rail in a substantially elliptical path*; and
>
> (e) means for selectively varying the size of the substantially elliptical path that the second end of each stroke rail travels.

'710 patent col. 7 ll. 11–26 (emphases added).

Figure 1 (below) from the '710 patent (labeled for ease of this Court's reference) illustrates the core features of the linkage system described and claimed in the '710 patent. (CTA App. A88).

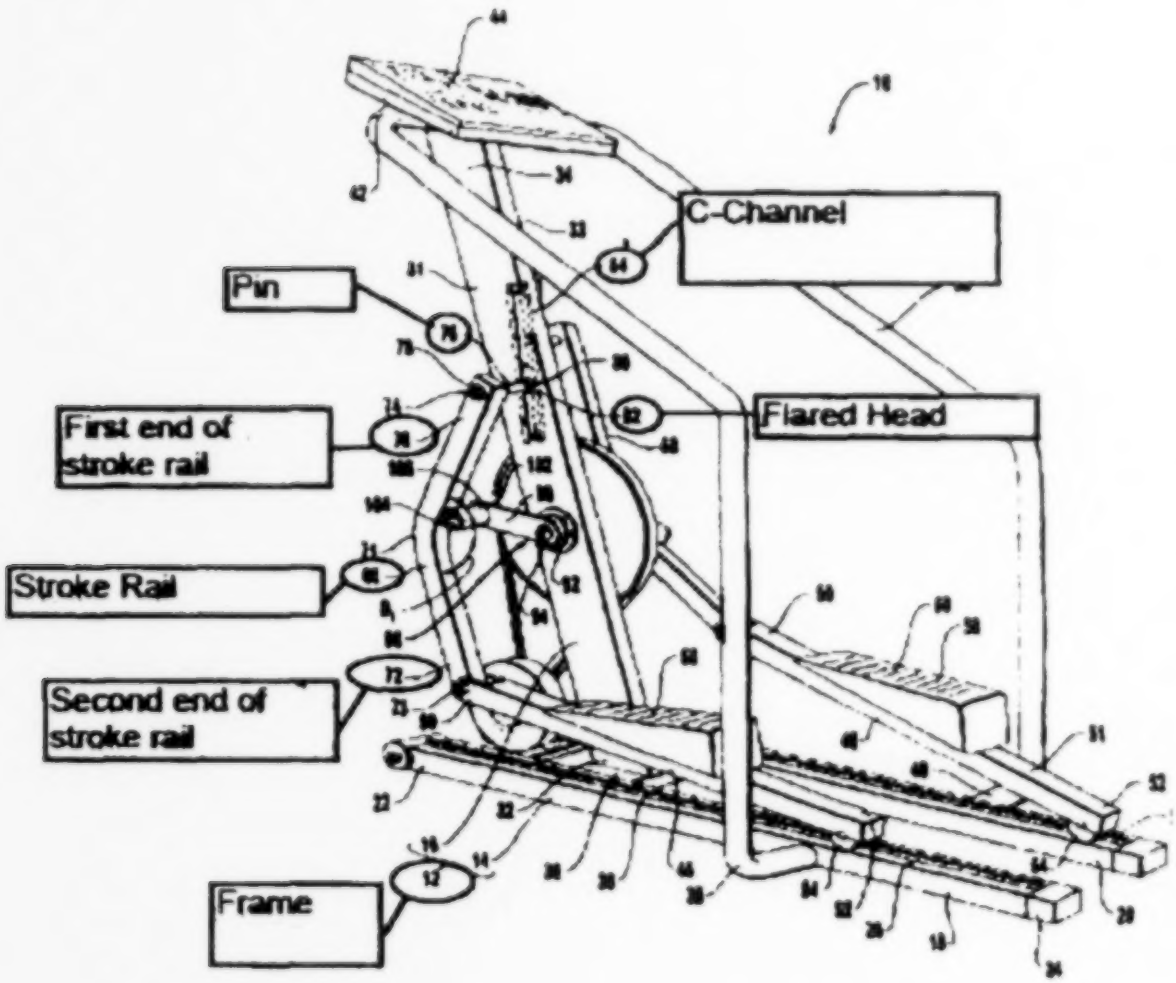

(*Id.*)

As shown, Icon's linkage system connects a "second end" 72 of a stroke rail 66 to a foot rail 50. The stroke rail extends to a "first end" 70 and the first end is

connected to the frame of the elliptical machine by, *inter alia*, a c-channel and pin/flared head arrangement (84 and 76 respectively). The pin 76 slides up and down in a straight path within the c-channel (*i.e.*, causing "linear reciprocating displacement").

Ultimately, the Patent Office granted the patent for the '710 linkage system, but was specific about what the patent covered:

> The prior art fails to show or teach applicant's claimed exercise apparatus comprising a frame; a pair of foot rails having foot supports; *a pair of stroke rails* each having one end hingedly connected to a respective foot rail and having the opposite end connected to the frame *for linear reciprocating movement* and for producing an elliptical path.

(CTA App. A1697, ¶3 (emphasis added)). Because all elliptical machines have a frame and foot rails that have foot supports, the patent examiner clearly regarded the "stroke rails each having one end hingedly connected to a respective foot rail and having the opposite end connected to the frame" and for producing "linear reciprocating movement" as the points of novelty in the '710 patent.

d. The Linkage System of Octane's Elliptical Machines

As can be seen below, Octane's commercially successful elliptical machines are nothing like the commercially unsuccessful elliptical machine shown and claimed in the '710 patent (compare above). The similarity begins and ends with the fact that they are elliptical machines.

Octane's Q45 Linkage System

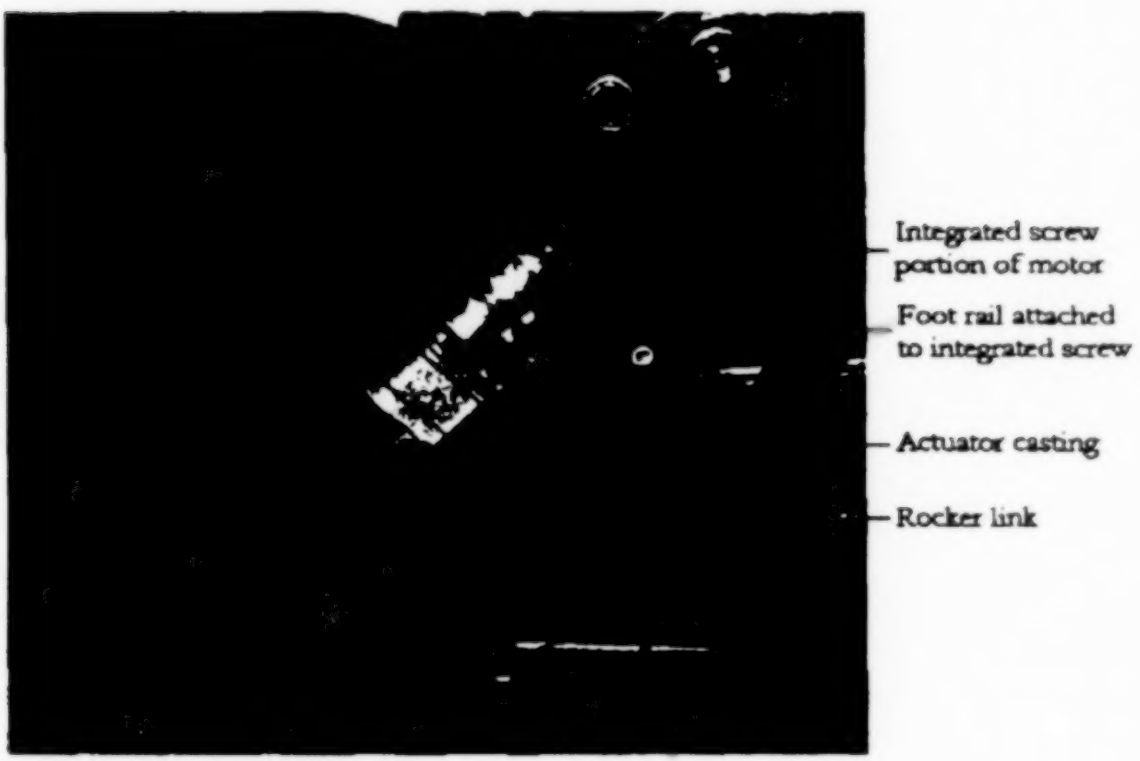

(CTA App. A1944).

Octane's Q47 Linkage System

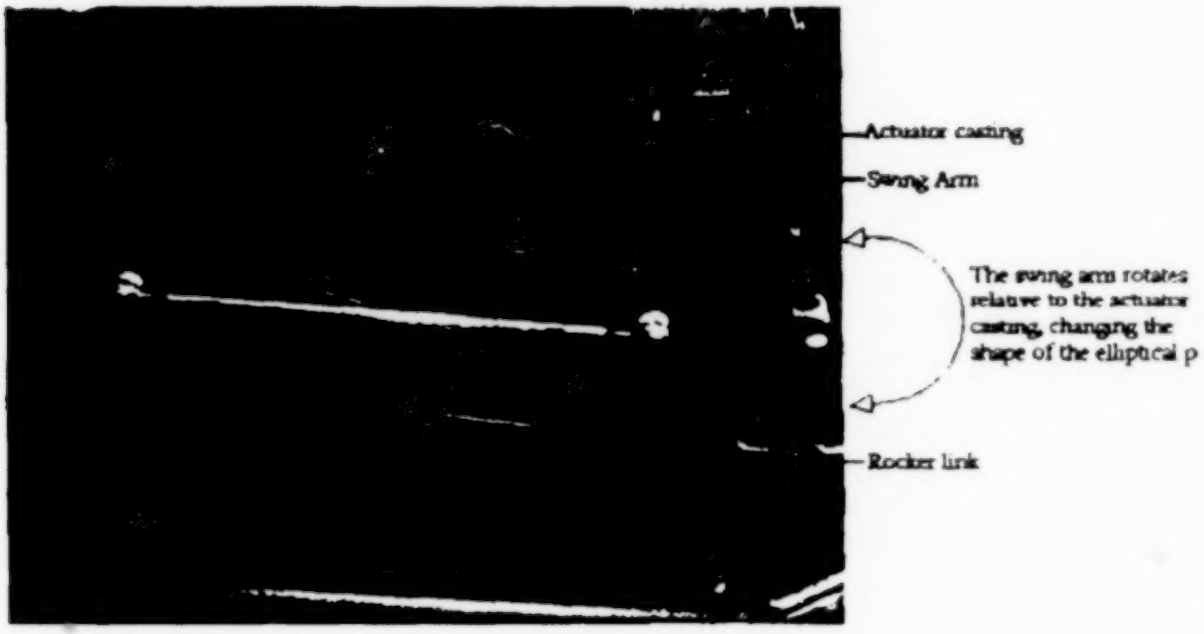

(*Id.*)

Most obviously, and as found by the lower court in the summary judgment ruling (discussed below), the '710 patent requires that one end of a stroke rail slide within a c-channel in a straight or "linear" line while the other end of the stroke rail moves the foot rails in an elliptical path. (CTA App. A36-A41). Octane's elliptical machines do not employ a c-channel linkage structure (or anything close– requiring Icon to argue that Octane's linkage system, including a "rocker link", is somehow "analogous"), and no part of the linkage moves along a straight or "linear" path (forcing Icon to ignore the main thrust of its invention and argue that curved paths are covered by its patent). (CTA App. A1046-A1062; A1090-A1094). Icon also had to assert that a "stroke rail" could include limitless parts – even though the patent only shows a single stroke rail component. (*Id.*) In short, Octane's linkage, (which in any

event was based on a pre-dating patented linkage system), bears no rational resemblance to anything that Icon could reasonably claim it invented.

e. The Lawsuit

By joining a small Octane distributor located in California, Icon (a Utah-based company) filed a complaint against Octane (a Minnesota-based company) in the United States District Court for the Central District of California on April 23, 2008. Upon motion by Octane, the action was subsequently severed and the case against Octane was transferred to the District of Minnesota, while the case against the California distributor was predictably dismissed. (CTA App. A2; A61;. A101-A106; A320-A324; A329; A2610-A2613).[1]

The complaint as initially filed by Icon alleged infringement of two unrelated patents: the '710 patent and U.S. Patent No. 5,104,120, entitled "Exercise Machine Control System" ("the '120 patent"). (CTA App. A101-A106; 339-341). That complaint specifically identified only Octane's Q47 series of elliptical machines of allegedly infringing each of the two patents, but Icon broadly sought discovery on all of Octane's products, claiming that its infringement allegations were not only limited to the Q47 series. (CTA App. A104; A438-A441; A2453-A2454).

Neither patent-in-suit–each of which utilize means-plus-function claim terms extensively–disclosed or claimed an elliptical machine linkage system (the subject

1. The District Court had subject matter jurisdiction pursuant to 28 U.S.C. §§ 1331 and 1338.

matter of the '710 patent) or an exercise machine control system (the subject matter of the '120 patent) similar to the setup of Octane's commercial exercise machine products. For this reason, and from the start of the case, Octane's counsel tried, unsuccessfully, to convince Icon to drop its claims (*e.g.*, CTA App. A478-A479). Ultimately, but over one year into the litigation, the claims relating to the '120 patent were dismissed after Icon received an adverse claim construction ruling in an Eastern District of Texas infringement action against another Icon competitor.

As detailed more fully below, Icon's assertions relating to the '710 patent were equally baseless and in June 2010, after repeated efforts to resolve the dispute failed, (*e.g.*, CTA App. A478-A479; A2453-A2454), Octane moved for summary judgment of non-infringement. (CTA App. A75). At Icon's insistence, however, the district court decided that a separate *Markman* hearing was needed before reaching summary judgment, and on June 21, 2010, the district court held that Octane's then pending Motion for Summary Judgment "must be rescheduled after th[e] Court rules on issues to be presented at the scheduled Markman hearing." (CTA App. A76).

In October 2010, following claim construction briefing by the parties, the district court held a *Markman* hearing and, in December 2010, issued a Memorandum Opinion and Order construing various terms of the '710 patent. (CTA App. 62a-86a). In that Opinion, the district court largely adopted Octane's constructions, which properly construed the means-plus-function limitations in the claims consistent with the structure recited in the specification for performing the claimed functions, and rejected Icon's overly-broad and baseless constructions which had little to no support in the specification. *Id.*

Despite a *Markman* ruling largely rejecting its assertions, and which made Icon's infringement contentions even more unreasonable, Icon continued to prosecute its claims undeterred. Octane renewed its motion for summary judgment of non-infringement of the '710 patent, noting that multiple claim limitations were lacking as a matter of law both literally and equivalently.

Constrained by the district court's adverse *Markman* ruling, in order to oppose the motion, Icon simply reargued its unreasonably-broad and previously-rejected claim constructions and advanced expert testimony removed from the disclosures of the patent and unrelated to anything Icon actually invented. For example, in order to oppose summary judgment, Icon speciously argued that a "stroke rail" as used in the patent could include any combination of parts and linkages–so long as some linkage connects the foot rail of an elliptical machine to the frame, the limitation is supposedly met. Of course, this is true of every elliptical machine.

Further, because Octane's machines did not utilize a c-channel linkage configuration that moved in a linear path, Icon repeatedly tried to read the limitation for "linear reciprocating displacement" out of the claims. When this strategy failed, Icon relied on the doctrine of equivalents, putting up an expert who generally discussed similarities of elliptical machines without regard to the functional purposes recited in the patent. For example, to support his unreasonable position that Octane's rocker link was equivalent to a c-channel, Icon's expert contended that both constrain lateral movement. Yet, the '710 patent does not recite constraining lateral movement as a function of the claimed means; the patent only discusses a structure that causes the stroke rail to move up and down in a *linear*

path. Herein lies the problem: where competitive products are involved, there is always some similarity of operation, but the question is whether the similarity resides in the patentable invention, not ancillary functions that are common to all competitive devices. Litigants, like Icon here, use experts to exploit the situation in an effort to create fact issues and disguise the case as meritorious.

On June 17, 2011, the court issued a Memorandum Opinion and Order granting Octane's motion for summary judgment. App. 31a-61a. The district court found several elements missing both literally and equivalently, including the "stroke rail" and "means for connecting" limitations noted above. A complete copy of the district court's opinion is included in the Appendix. *Id.* Icon and Octane then stipulated to the dismissal of Octane's counterclaim for a declaratory judgment of invalidity of the '710 patent, and the district court entered final judgment on July 15, 2011. App. 29a-30a. Icon appealed that decision to the Federal Circuit. (CTA App. A2614-A2615).

Meanwhile, in the district court, Octane, which had by that point incurred attorney's fees and costs of over $1.3 million, moved the district court to declare the case exceptional and award it fees pursuant to 35 U.S.C. § 285. (CTA App. A2619-A2641). The unreasonable and baseless positions taken and maintained by Icon throughout the litigation, in addition to damning emails and deposition testimony, showed the litigation to be vexatious and unjustified in nature, warranting a finding of exceptional case status and fees. (*See e.g.*, CTA App. A2645; A1608; A1233, 87:24-88:10).

More specifically, documents uncovered in the litigation reflected that Icon decided to sue Octane

with an ***"old patent"*** it had ***"sitting on the shelf"*** as a way of hampering the upstart competitor. In email correspondence sent soon after the start of the litigation, Pat McGinnis, Icon's Vice President of Global Sales, wrote to other Icon employees suggesting that the lawsuit was a tool against a competitor: ***"We are suing Octane. Not only are we coming out with a great product to go after them, but throwing a lawsuit on top of that"***. (CTA App. A2645). The August 2008 email by Mr. McGinnis was forwarded on to a potential customer/retailer with a message from another Icon employee stating ***"just clearing the way and making sure you guys have all your guns loaded!"***. (CTA App. A2645). Then, in an email dated September 16, 2009, another Icon sales associate wrote to Mr. McGinnis stating, "I heard we are suing Octane!" (CTA App. A1608). In response, Mr. McGinnis wrote back, ***"Yes – old patent we had for a long time that was sitting on the shelf. They are just looking for royalties."*** (*Id.*) Further, when asked in deposition if Icon sought to gain a competitive advantage over the smaller Octane with the lawsuit, Icon's corporate designee indicated that this is implied in every litigation. (CTA App. A1233, 87:24-88:10). In other words, Icon filed suit as a way to hamper a smaller competitor and potentially extract a royalty from Octane's successful high-end elliptical machine sales.

Despite the above evidence, and without conducting a hearing on the fee motion, on September 6, 2011, the district court denied Octane's motion for attorney's fees. App. 19a-28a. The district court, citing the line of Federal Circuit cases holding that in the absence of litigation misconduct, fees may ***only*** be awarded if the allegations are both objectively baseless and there is clear and convincing evidence of subjective bad faith, found that neither prong was met. According to this standard,

the district court stated that in order to be exceptional "'the plaintiff's case must have no objective foundation, and the plaintiff must actually know this.'" Applying that standard, the district court reasoned that the case was not objectively baseless, finding that Icon's proposed claim constructions were not frivolous because they were not necessarily precluded by the broad language of the claim or the disclosures in the specification, and that Icon's reassertion of its previously-rejected claim construction in its summary judgment argument was "confused and repetitive," but not objectively baseless. Further, the district court "had no reason to doubt" Icon's mere representations that it had actually purchased and inspected a Q47 machine and had secured opinions from experts and counsel, despite the fact that Icon did not raise this assertion until Octane moved for attorney fees, and never produced any documentation supporting this assertion.

With respect to the subjective bad faith element, the district court disregarded Icon's incriminating emails as "stray remarks by employees with no demonstrated connection to the lawsuit" (even though the emails were from Icon's Vice President of Global Sales) and that "[s] imply bringing suit to gain a competitive advantage is not evidence of bad faith." The full text of this decision is included in the Appendix. *Id.*

Octane timely appealed the denial of fees to the Federal Circuit and the two appeals (Icon's appeal of the decision granting summary judgment and Octane's appeal of the decision denying fees) were consolidated on January 10, 2012. On October 24, 2012, the Federal Circuit affirmed both rulings. App. 1a-17a. First, the Federal Circuit

found that the district court properly granted summary judgment, agreeing that the "stroke rail" and "means for connecting" limitations were not present literally or under the doctrine of equivalents as a matter of law. *Id.* at App. 8a-17a.

As to the denial of fees, the Federal Circuit devoted only *one* paragraph to the issue, summarily concluding that "we have reviewed the record and conclude that the court did not err in denying Octane's motion to find the case exceptional," and stating "[w]e have no reason to revisit the settled standard for exceptionality." *Id.* at 17a. Octane filed a Petition for Rehearing and Rehearing En Banc, which was summarily denied on December 27, 2012. App. 87a-88a.

ARGUMENT

The proliferation of weak patent cases by those who did not invent, or bring to fruition, the subject of the alleged infringement is an issue that has garnered national attention. Just recently, the President of the United States publicly espoused the view that the America Invents Act did not go far enough in reforming the patent system to prevent abuse, and a bill targeting non-practicing entities is presently in debate in Congress.[2] The statutory means to restrain abusive patent litigation practices, however, already exists. The Patent Act already includes a provision

2. For a transcript of the President's comments see http://www.patentlyo.com/patent/2013/02/obama-on-patent-reform.html. For a discussion of the pending bill, introduced by Congressman Peter DeFazio and known as the SHIELD Act, see http://defazio.house.gov/index.php?option=com_content&view=article&id=792:defazio-introduces-shield-act-to.

that permits the award of attorney fees to the prevailing party in "exceptional cases." 35 U.S.C. § 285. The purpose of this statute is "to compensate the prevailing party for its monetary outlays in the prosecution or defense of the suit." *Automated Bus. Cos. v. NEC America, Inc.*, 202 F.3d 1353, 1355 (Fed. Cir. 2000) (*quoting Central Soya Co., Inc. v. Geo. A. Hormel & Co.*, 723 F.2d 1573, 1578 (Fed. Cir. 1983)); *see also Mathis v. Spears*, 857 F.2d 749, 753 (Fed. Cir. 1988). "In addition, § 285 serves as a deterrent to 'improper bringing of clearly unwarranted suits' for patent infringement." *Automated Bus. Cos.*, 202 F.3d at 1355 (*quoting Mathis*, 857 F.2d at 754); *see also Marctec, LLC v. Johnson & Johnson*, 07-CV-825-DRH, 2010 WL 680490 (S.D. Ill. Feb. 23, 2010).

The problem is that this statutory provision, as interpreted by the courts over time–and most significantly as articulated by the Federal Circuit Court of Appeals in a line of cases beginning in 2005–has strayed from the original intent of preventing "gross injustice" to an accused infringer (the result of a defendant having to spend $1 million plus to defend itself against overreaching and unfounded contentions), to a standard that is near-impossible for an accused infringer to meet no matter the unreasonableness of the litigation, and that consequently serves as no deterrent to the assertion of spurious claims.

Moreover, and despite sharing the same statutory "exceptional case" mandate, the high standard for prevailing accused infringers (a showing that the litigation is objectively baseless and brought in subjective bad faith) conflicts with the lower bar set for prevailing patent owners (a showing "that the infringer acted despite an objectively high likelihood that its actions constituted

infringement of a valid patent."). It only makes sense that a patent owner can recoup its attorney fees if the patent owner proves that its case is so strong that it had a high likelihood of success and the defendant proceeded with its actions despite this, *i.e.*, willful infringement. In contrast, though, that same patent-litigant should be subjected to a fee award *against* it, if the accused infringer demonstrates that the plaintiff's case had an objectively low likelihood of success, and yet the patentee proceeded to maintain and prosecute the case. If anything, the patent holder, who has been granted a limited-term legal monopoly by society, should have *more* of an obligation to exercise that power responsibly, not less.

Neither the statute, this Court's precedent, nor public policy supports the inexplicably and unfairly higher (bordering on impossible) standard that has evolved for finding a case exceptional and awarding fees to a prevailing accused infringer. The proliferation of patent troll cases over the last five years is well known and problematic for commerce in this country. There are legislative efforts to redress this problem, but even these proposals may not adequately protect smaller competitors, like Octane, from the costs of defending spurious patent cases. The discretion of courts to award fees – under a standard that is in accord with the statute, fair to both patentees and accused infringers and does not discriminate between practicing and non-practicing entities – is the deterrent needed.

Octane respectfully requests, for the reasons explained more fully below, that this Court grant *certiorari* review to bring the common law precedent back into line with the Congressional intent behind the "exceptional case"

statute; namely to provide district courts with reasonable discretion to award fees to prevailing accused infringers where patent owners bring and maintain patent cases having an objectively low likelihood of success.

I. The standard for awarding fees to a prevailing accused infringer has strayed from the statutory "exceptional case" mandate, resulting in a standard that is near-impossible to meet, and serves no deterrent value.

The current standard articulated by the Federal Circuit holds that the award of attorney fees under Section 285 is a two-step process. *Highmark, Inc. v. Allcare Health Mgmt. Sys., Inc.*, 687 F.3d 1300, 1308 (Fed. Cir. 2012), *rehearing denied* with opinion and dissent, 701 F.3d 1351 (Dec. 6, 2012); *Forest Labs., Inc. v. Abbott Labs.*, 339 F.3d 1324, 1327-28 (Fed. Circ. 2003). First, the court must determine whether the prevailing party has established by clear and convincing evidence that the case is exceptional. *Forest Labs*, 339 F.3d at 1328. Second, for those cases that are exceptional, the court must decide if fees are warranted under the circumstances and the amount of any fees to be awarded. *Id.*

According to the Federal Circuit, in the absence of litigation misconduct or fraud in securing the patent, *for a prevailing accused infringer* a case is exceptional ***only if*** it is both "objectively baseless" *and* "brought in subjective bad faith" by the patentee. *Brooks Furniture Mfg., Inc. v. Futailer Int'l, Inc.*, 393 F.3d 1378, 1381 (Fed. Cir. 2005); *Highmark*, 687 F.3d at 1308. To be objectively baseless, "the infringement allegations must be such that no reasonable litigant could reasonably expect success

on the merits." *Highmark*, 687 F.3d at 1308-09. With respect to the subjective element, the Federal Circuit holds that "there is a presumption that an assertion of infringement of a duly granted patent is made in good faith," and thus, "the subjective prong of *Brooks Furniture* must be established with clear and convincing evidence." *Highmark*, 687 F.3d at 1309. To establish this element, the Federal Circuit directs that "even if the claim is objectively baseless, it must be shown that lack of objective foundation for the claim 'was either known or so obvious that it should have been known' by the party asserting the claim'." *Id.* (citing *Seagate Tech., LLC*, 497 F.3d 1360, 1371 (Fed. Cir. 2007)).

Prior to *Brooks Furniture*, Federal Circuit precedent generally held that "exceptional case" status is warranted in a variety of contexts depending upon the "totality of the circumstances," to prevent "gross injustice." *See, e.g., Mathis v. Spears*, 857 F.2d 749 (Fed. Cir. 1988); *Eltech Systems Corp. v. PPG Industries, Inc.*, 903 F.2d 805, 810 (Fed. Cir. 1990); *Sun-Tek Indus., Inc. v. Kennedy Sky Lites, Inc.*, 929 F.2d 676, 679 (Fed. Cir. 1991). These cases provide ***examples*** of conduct that may constitute an "exceptional case," such as vexatious or unjustified litigation or pursuing frivolous suits. *See e.g., Multiform Desiccants, Inc. v. Medzam*, Ltd., 133 F.3d 1473, 1481–82 (Fed. Cir. 1998) ("Findings of exceptional case have been based on a variety of factors; for example, willful or intentional infringement, inequitable conduct before the Patent and Trademark Office, vexatious or unjustified litigation, or other misfeasant behavior."); *Bayer Aktiengesellschaft v. Duphar Int'l Research B.V.*, 738 F.2d 1237, 1242 (Fed. Cir. 1984) ("In awarding attorney fees to a prevailing accused infringer, such exceptional circumstances include, *inter*

alia, inequitable conduct during prosecution of a patent, misconduct during litigation, vexatious or unjustified litigation, or a frivolous suit.")

The "gross injustice" language of these pre-*Brooks Furniture* cases originated from the legislative history of the statute itself. The 1946 Act, which first adopted the discretionary fee shifting provision, explained that "[t]he provision is also made general as to enable the court to prevent a *gross injustice* to the alleged infringer." *See* S.Rep. No. 1503, 79th Cong., 2d Sess. (1946), *reprinted in* 1946 U.S.Code Congressional Service 1386, 1387 (emphasis added).[3] The pre-*Brooks Furniture* cases deferred to the legislative intent of Section 285 by employing a general "totality of the circumstances" test, rather than the rigid and virtually insurmountable test set forth by *Brooks Furniture*.

With the *Brooks Furniture* decision in 2005, the Federal Circuit – citing this Court's decision in *Professional Real Estate Investors v. Columbia Pictures Industries*, 508 U.S. 49, 60-61, 113 S.Ct. 1920, 123 L.Ed.2d 611 (1993) (hereafter "PRE") – held that "[a]bsent misconduct in conduct of the litigation or in securing the patent, sanctions may be imposed against the patentee

---

3. In 1952, the statute was amended to add the "exceptional case" language. S.Rep. No. 1979, 82nd Cong., 2d Sess. (1952), *reprinted in* 1952 U.S.Code Cong. & Ad. News 2394, 2423. However, according to a Revision Note to this section, the amendment was not meant to alter the legislative intent of the original statute (*i.e.* to afford discretion to award fees to prevent gross injustice). *See Rohm & Haas Co. v. Crystal Chem. Co.*, 736 F.2d 688 (Fed. Cir. 1984) (citing P.J. Federico, Commentary on the New Patent Act, Title 35, United States Code Annotated, page 1, at 56).

only if both (1) the litigation is brought in subjective bad faith, and (2) the litigation is objectively baseless." *Brooks Furniture*, 393 F.3d at 1381 (emphasis added) (citing *Professional Real Estate Investors*, 508 U.S. at 60-61; *see also Eon–Net LP v. Flagstar Bancorp*, 653 F.3d 1314, 1324 (Fed. Cir. 2011); *iLOR, LLC v. Google, Inc.*, 631 F.3d 1372, 1377 (Fed. Cir. 2011).

In PRE this Court addressed the "sham" exception to the Noerr-Pennington antitrust immunity doctrine in the context of an asserted copyright infringement action. *See Prof Real Estate Investors, Inc.*, 508 U.S. 49. In *Brooks Furniture*, the Federal Circuit, though citing to PRE, provides no analysis as to why the same two-part test for sham litigation and assertion of an antitrust cause of action (with the potential for not only attorney fees, but treble damages) should necessarily apply to the discretionary fee shifting of 35 U.S.C. § 285. However, subsequent Federal Circuit authority confirms that the Federal Circuit's Section 285 standard as stated in the 2005 *Brooks Furniture* decision is based on its interpretation of this Court's holdings in PRE. *See Highmark*, 687 F.3d at 1309 n.1. And as recently as August 2012, the Federal Circuit called its two-part objective/subjective test for fee shifting "established law under section 285."[4] *Id.*, at 1308.

---

4. In an opinion released just two days before the filing of this Petition, the Federal Circuit, applying its two-part "exceptional case" test, once again reversed an award of attorneys' fees to prevailing accused infringers (due to the patentee's failure to inspect the accused product) in a case before the United States District Court for the Eastern District of Pennsylvania wherein the court entered judgment on a jury verdict finding that the asserted patent was not infringed, invalid and unenforceable. *Checkpoint Systems, Inc. v. All-Tag Security S.A.*, No. 2012-1085 (Fed. Cir. Mar. 25, 2013).

The threshold for fee shifting has always been high, but the Federal Circuit's articulation of the "exceptional case" standard in this manner has made it near-impossible for prevailing accused infringers to recoup attorney fees, and it has gutted the otherwise deterring-effect of the statute on the assertion of spurious patent claims. According to LegalMetric, a company providing statistical analyses of federal court cases, attorney fees are granted in only about 1% of all patent cases that are filed, with plaintiffs (typically the patent owners) being almost twice as likely as defendants (typically the accused infringers) to win a contested fee motion. As the instant case aptly illustrates, given the nature of patent cases, even in thin-beyond-reason cases with documented evidence of bad faith motivations, there is virtually no chance for accused infringers to recoup fees, even in the rare case where a defendant makes it to the fee consideration stage.

By setting the standard too high, it encourages overly aggressive and unscrupulous patent owners to assert weak patent claims to coerce patent settlements or otherwise gain unfair competitive advantage in the United States marketplace. Patent litigation is expensive. According to a survey published in 2011 by the American Intellectual Property Law Association ("AIPLA") the median cost for a patent litigation in which the amount in controversy is from $1-25 million, through the end of discovery, is $2.5 million (inclusive of all costs). (*See* A2649 for 2009 data which is unchanged in 2011 for this category). Large companies know this, as do patent trolls, and, unfortunately, can use patent litigation as a weapon against competitors, especially smaller competitors. Many smaller competitors simply do not have the financial resources or wherewithal to defend a patent infringement case,

no matter how spurious the contentions. *See* Michael J. Meurer, *Controlling Opportunistic and Anti-Competitive Intellectual Property Litigation*, 44 B.C. L. Rev. 509, 512 (2003) (Characterizing weak patent infringement lawsuits as either (1) "anti-competitive lawsuit[s] seeking to impair the defendant's performance in their shared market or even to exclude the defendant from the market completely"; or (2) "opportunistic lawsuit[s] seeking a settlement payment").

Complicating matters, there is almost no economical or expeditious way for an accused infringer to extract itself from baseless litigation. Unlike certain forms of litigation (*e.g.*, securities litigation or antitrust litigation), rarely is a patent infringement action dismissed at the pleading stage. Rather, before a defendant accused of infringement has any hope of extricating itself from a litigation, often-times (as here) substantial discovery (both fact and expert), *Markman* briefing and hearing, and summary judgment briefing and hearing, must occur. By the time summary judgment is granted, substantial time is invested in the case not only by the parties, but by the district court, as well.

For their part, district court judges—who, in many instances, have no technical background and little familiarity with the patent system—are often faced with complex technology, difficult-to-read patent language and a body of case law that is both robust and nuanced. (The case law surrounding Section 112 ¶6 means-plus-function claim construction, as was at issue here, is a good example of this). No matter how preposterous the merits of the infringement case may be, in order to reach a resolution on the merits, the district court judge must

invest significant time and energy to decipher the claim scope and understand the defendant's position.

For these reasons, no matter how unreasonable the patentee's contentions, it is a rare district court judge who will have the courage to call a patentee's claims "baseless" after the investment of time and effort necessitated by these cases. Combined with the necessity of showing clear and convincing evidence of "subjective bad faith" (evidence that is virtually impossible to come by absent a corporate representative's confession), the standard is all but unreachable and not in accord with the legislative goals of providing discretion to courts to prevent gross injustice to accused infringers.

II. There is no basis in the statute, this Court's precedent, or policy for a standard that requires a higher showing by prevailing accused infringers versus prevailing patentees.

The fee shifting provision of Section 285 (discretion to award fees to the prevailing party in an "exceptional case") should apply equally to prevailing accused infringers and prevailing patentees; yet it does not. As reflected in the district court's decision to deny fees in this case and as described more fully below, the Federal Circuit's precedent sets the bar higher for prevailing accused infringers, than it does for prevailing patentees.

Since 1990 and continuing up to today, the Federal Circuit has maintained that the standard for the award of fees under 35 U.S.C. § 285 is the same for patentees

and accused infringers.[5] Yet in the case of prevailing patentees, the Federal Circuit holds that a case may be deemed exceptional based on a finding of willful patent infringement. *Amsted Indus. Inc. v. Buckeye Steel Castings Co.*, 24 F.3d 178 (Fed. Cir. 1994) (willful infringement alone is a sufficient basis for classifying a case "exceptional"). Indeed, when a trial court denies attorney fees in spite of a finding of willful infringement, the court must explain why the case is *not* "exceptional" within the meaning of the statute. *S.C. Johnson & Son, Inc. v. Carter-Wallace, Inc.*, 781 F.2d 198, 201 (Fed.Cir. 1986); *see also Transclean Corporation v. Bridgewood Services, Inc.*, 290 F.3d 1364, 1379 (Fed. Cir. 2002). To prove willful patent infringement, "a patentee must show by clear and convincing evidence that the infringer acted despite an objectively high likelihood that its actions constituted infringement of a valid patent." *In re Seagate Technology, LLC*, 497 F.3d 1360, 1371 (Fed. Cir. 2007) (*en banc*). If this threshold objective standard is satisfied, the patentee must then also demonstrate that "this objectively-defined risk (determined by the record developed in the infringement proceeding) was either known or so obvious that it should have been known to the accused infringer." *Id.*

---

5. In *Machinery Corp. of America v. Gullfiber AB*, 774 F.2d 467 (Fed. Cir. 1985), the Federal Circuit reserved judgment as to whether there is a higher standard for receipt of fees by an alleged infringer. In *Eltech Sys. Corp. v. PPG Industries, Inc.*, 903 F.2d 805, 810-11 (Fed. Cir. 1990), the Federal Circuit resolved that question stating that the standard for receipt of fees under Section 285 is the same for patentees and accused infringers. The Federal Circuit maintains in a recent precedent that the "same objective/subjective standard applies for both patentees asserting claims of infringement and alleged infringers defending against claims of infringement." *See Highmark*, 687 F.3d at 1309.

Contrary to the Federal Circuit's assertion, this is not the same fee shifting standard for prevailing accused infringers. The corollary for an accused infringer in the first instance would be to show that the patentee brought and maintained the claims of infringement despite an objectively *low likelihood* that it would prevail on its infringement cause of action. Instead, the accused infringer must show that the case was "objectively baseless", *i.e.*, that "no reasonable litigant could reasonably expect success." As made clear by the analysis of the district court in the case below (which the Federal Circuit affirmed), this is a much higher standard to meet. According to the district court, "[a] proposed claim construction is not frivolous if not precluded by the language of the claim or the disclosures in the specification." Because Icon was able to conceive of claim construction arguments whereby a means-plus-function claim requiring "linear reciprocating displacement" could somehow not require straight-line movement like that shown in the specification of the '710 patent (the point of novelty of the '710 patent), the district court concluded the suit could was not "objectively baseless." This reasoning, however, makes any argument about a means-plus-function limitation non-frivolous, no matter how outrageous – as here – the proposed construction. Means-plus-function limitations, by definition, do not recite the claimed structure in the claim, and, instead require resort to the specification to discern the claimed structure. But this does not make any argument about the scope of the claim reasonable.

In order to secure the possibility of fees, the accused infringer must also prove, by clear and convincing evidence, that the action was brought in "subjective bad

faith." In a recent concurring opinion, Judge Reyna of the Federal Circuit Court of Appeals noted that "[o]ur cases have not established a precise definition for 'bad faith' in the exceptional case context." *Raylon v. Complus Data Innovations, Inc.*, 700 F.3d 1361, 1373-74 (Fed. Cir. 2012) (concurring). Judge Reyna, in that concurring opinion, goes on to suggest it involves pursuit of litigation based on "wrongful intent, recklessness, or gross negligence," a standard admittedly more in line with the recklessness standard of willful infringement, and pre-*Brooks Furniture* cases.[6] Yet, as demonstrated by the district court's decision in this case – which, again, the Federal Circuit summarily affirmed – this is not the standard of the Federal Circuit majority. Citing *iLOR* and *Brooks Furniture*, the district court stated that to meet the subjective bad faith element, "'the plaintiff's case must have no objective foundation, and the plaintiff must actually know this.'" Slip Op. at 6 (*quoting iLOR*, 631 F.3d at 1377). Applying this standard and looking at the evidence in isolation, the district court went on to conclude that the email evidence that Icon had pulled an "old patent" from off "the shelf" was not shown to be Icon's "official position," and, in any event according to the court, "[e]ven if the emails suggest Icon commenced this lawsuit to gain a competitive advantage against a smaller company, that fact does not make the lawsuit frivolous." Slip Op. at 8. This is a far different standard than the known or should have known of a high likelihood of infringement of a valid

---

6. "Where, as here, the patentee is manifestly unreasonable in assessing infringement, while continuing to assert infringement in court, an inference is proper of bad faith, whether grounded in or denominated wrongful intent, recklessness, or gross negligence." *Eltech Systems*, 903 F.2d at 811; *See also Phonometrics, Inc. v. Westin Hotel Co.*, 350 F.3d 1242, 1246 (Fed. Cir. 2003).

patent that is the standard for prevailing patentees, which explains why patentees prevail on contested fee motions almost twice as often as accused infringers. (Statistical data provided by LegalMetric).

Neither the statutory framework, nor this Court's precedent, nor public policy supports this result. First, nothing in the statute distinguishes between the prevailing parties. Rather, fees may be awarded to either plaintiff or defendant prevailing parties in exceptional cases. 35 U.S.C. § 285.

Second, in the analogous context of Copyright law, this Court has directed that prevailing plaintiffs and prevailing defendants must be treated alike for purposes of awarding attorney fees. *Fogerty v. Fantasy, Inc.*, 510 U.S. 517 (1994). The fee shifting provision of the Copyright Act is similar to the Patent Act and to the Lanham [Trademark] Act, except that the Copyright Act excludes the "exceptional case" language, merely permitting an award of fees to the prevailing party. Because of this, in *Fogerty*, this Court called the fee-shifting statutes in the patent and trademark fields "closely related" to that of Copyright, and cited to these provisions as supporting a party-neutral approach in the Copyright Act. *Id.* at n.12.[7] Further, in *Fogerty*, this Court rejected a rigid formulation of the fee-shifting standard, instead directing fees to be awarded on a discretionary basis in light of considerations identified. *Id.* at 534 (stating "[t]here is no precise rule or formula

7. The proposition that the Patent Act employed a party-neutral fee approach was based on the Federal Circuit's pre-*Brooks Furniture* pronouncement in Eltech that the standards should be the same. *Id. (citing Eltech Sys. Corp. v. PPG Industries, Inc.*, 903 F.2d 805, 811 (Fed. Cir. 1990)).

for making these [equitable] determinations). There is no reason to believe that Congress intended any different approach in the patent context.

From a policy perspective, a patent grants to its holder a legalized monopoly. *See Zenith Radio Corp. v. Hazeltine Research, Inc.*, 395 U.S. 100, 135 (1969) ("The heart of [the patentee's] legal monopoly is the right to invoke the State's power to prevent others from utilizing his discovery without consent"); *see also Precision Instrument Mfg. Co. v. Auto. Maint. Mach. Co.*, 324 U.S. 806, 816 (1945) ("a patent is an exception to the general rule against monopolies and to the right of access to a free and open market"). This is permitted because the overall good of encouraging innovation and promoting disclosure is thought to outweigh the anticompetitive effects of a time-limited monopoly. *See generally Bilski v. Kappos*, 130 S.Ct. 3218, 3255 (2010) ("even when patents encourage innovation and disclosure, 'too much patent protection can impede rather than 'promote the Progress of ... useful Arts'.'"). But a patent is, nevertheless, by its nature anticompetitive, and for this reason, the ways in which a patentee may grant, utilize and leverage a patent are not without limit and are often carefully scrutinized. *See In re Ciprofloxacin Hydrochloride Antitrust Litig.*, 544 F.3d 1323, 1333 (Fed. Cir. 2008) (noting that patents are by nature anticompetitive and examining whether agreements improperly restricted competition beyond the exclusionary zone of the patent); *see also Bilski*, 130 S.Ct. at 3229 (noting "the tension, ever present in patent law, between stimulating innovation by protecting inventors and impeding progress by granting patents when not justified by the statutory design.")

Patentees (including both practicing and non-practicing patentees) asserting their legal monopolies should at least have to assert objectively reasonable causes of action, or else the risk of paying for the litigation should shift to the patentee, regardless of counsel's conduct. This is fair and consistent with the overarching goals of the patent system. Notably, the prevailing defendant is not receiving a punitive award. It merely secures return of its attorney fees and is in no way compensated for the time it spent on the litigation or disruptions to its business that result from a patent plaintiff using the lawsuit as a competitive weapon. The alternative – leaving patentees unchecked to assert thin-beyond-reason causes of action – has a huge anticompetitive impact on society and constitutes a gross injustice to innocent defendants. Indeed, if attorney fee shifting was more symmetrical, it would incentivize accused infringers to challenge bad patents, thereby protecting future accused infringers and the public from the anti-competitive effects of spurious lawsuits based on patents that should have never issued in the first place. *See* F. Scott Kieff, *The Case for Preferring Patent-Validity Litigation Over Second-Window Review and Gold-Plated Patents: When One Size Doesn't Fit All, How Could Two Do the Trick?*, 157 U. Pa. L. Rev. 1937 (2009) (fee shifting would help accused infringers of "junk patents" raise the funds needed to challenge validity, and would "help align the parties' incentives to communicate with each other about the evidence that each has about the weaknesses in the other's case.")

III. The "exceptional case" standard for a prevailing accused infringer should allow district courts discretion to award fees in any case in which the patentee unreasonably pursues a case having an objectively low likelihood of success.

As indicated above, the statutory goal of fee shifting is the prevention of gross injustice to accused infringers. As any defendant accused of patent infringement could attest, the mere existence of litigation typically has a detrimental impact on business, as customers become nervous about buying a product accused of infringement. When the allegations are unfounded, and yet a defendant must invest one to three *years*, and one to three *million* dollars to establish the fallacy of the patentee's claims, the result is grossly unjust.

To be clear, Octane is not proposing that "exceptional case" means any case in which an alleged infringer prevails. But cases that have an objectively low likelihood of success should be "exceptional", and not the norm. The cost of weak infringement claims should be borne by the patentee, not the alleged infringer trying to compete fairly in the marketplace. In those instances (instances which would be even less frequent under this standard than at present), fee shifting is appropriate.

A. Exceptional case status should not require proof of a Rule 11 violation.

By calling for a standard that allows for the award of fees in cases having an objectively low likelihood of success, Octane is not necessarily arguing for a departure from the line of cases that would allow an award of fees

in "frivolous" or "baseless" cases, unless those terms are synonymous with Rule 11-type conduct. Octane *is* proposing that the "exceptional" case standard of 35 U.S.C. § 285 should ***not*** be commensurate with a Rule 11 violation, contrary to the most recent Federal Circuit case addressing Section 285. In *Raylon*, the Federal Circuit took no issue with the district court merging its Rule 11 and Section 285 analyses, stating that "[s]imilar to the evaluation under Rule 11, for litigation to be objectively baseless, the allegations must be such that no reasonable litigant could reasonably expect success on the merits." *Raylon*, 700 F.3d at 1370.

To begin, Rule 11 already includes provisions for sanctions, which would render Section 285 unnecessary if they require proof of the same conduct. Fed. R. Civ. P. 11. Beyond this, labeling a case "frivolous" such that it constitutes a violation of Rule 11 is not a step that most courts take lightly, not only because of the time and money investment in these cases, but also because labeling a case "frivolous" such that it constitutes a violation of Rule 11 requires condemnation of *litigation counsel's* conduct. Rule 11 provides, among other things, that by signing all materials submitted to the Court an attorney is representing that "the claims, defenses, and other legal contentions are warranted by existing law or by a non-frivolous argument for extending, modifying, or reversing existing law or for establishing new law. . ." If a case is "frivolous" under Rule 11, then a patentee's counsel must have acted inappropriately, a conclusion that most courts are loathe to reach.

A case should not have to rise to the level of a Rule 11 violation before it is deemed "exceptional" for fee shifting

purposes. Pursuing cases having a low likelihood of success (though perhaps not rising to the level of a Rule 11 violation), should not be the norm for patentees, and when it does occur and the patentee is unsuccessful, the case should bear the moniker of an "exceptional case," with the District Court having discretion in those cases to award fees.

B. Exceptional case status should not require proof of bad faith.

In a patent case, the most an accused infringer can ever hope for is recoupment of reasonable attorney fees and costs. Even in the rare cases where this is awarded, however, the accused infringer is not made whole. That party is still out the hundreds of hours dedicated by company personnel to the defense of the case (hours that could have been spent on research and development, sales efforts and other endeavors), not to mention the often-significant cost that the suit may have had on the accused infringer in the marketplace. Unlike on the patentee side, where the plaintiff may get treble damages against a willful infringer under 35 U.S.C. § 284, the wrongfully-accused infringer has no such remedy against a patentee.[8] The accused infringer is entitled to, at most, recoupment of reasonable fees.

Why is this significant? It is significant because under the law, subjective bad faith (*i.e.*, the willful, wonton or

8. Though this would be a matter for Congress by amendment to the statute, if bad faith were established a fair result would be an award of treble the amount of reasonable attorney fees to the alleged infringer as a punitive measure against a patentee acting in bad faith.

reprehensible nature of a party's conduct), while often the critical factor in an award of *punitive or treble damages* (which an alleged infringer cannot recover), is not a pre-requisite, in most statutory schemes, to an award of *reasonable attorney fees. See, e.g.,* 17 U.S.C. § 505 (authorizing the court to award fees to the prevailing party in copyright cases); 42 U.S.C. § 1988 (allowing court, in its discretion, to award attorney fees to the prevailing party in civil rights actions); 42 U.S.C. § 3613 (allowing court, in its discretion, to award attorney fees to the prevailing party in fair housing actions). Indeed, trademark law has the *exact same* fee provision as the Patent Act,[9] and yet the Eighth Circuit – where this case originated – has held that the "absence of bad faith is not alone determinative on the Lanham Act fee issue." *Hartman v. Hallmark Cards, Inc.*, 833 F.2d 117, 123 (8th Cir. 1987). In this instance, the statute merely requires that the court find the case "exceptional" before awarding fees. It says nothing about requiring a showing of subjective bad faith, and the Federal Circuit should not impose its own requirements.

Octane submits that in view of the differences between punitive damages and reasonable attorney fees and the ways in which these are typically dealt with in statutes and by the courts, an alleged infringer should not have to make a showing of subjective bad faith in order to show a case is "exceptional." Regardless of intent (which is inevitably almost impossible to prove), a patentee that asserts a cause of action having an objectively low likelihood of success

---

9. In passing the Lanham Act attorney fee provision, Congress expressly noted that fees were available under the patent and copyright laws, but not, up until that point, under trademark law. *See* S.Rep. 93-1400, 1974 U.S.C.C.A.N. 7134, 7135.

against its competitor should bear the risk of paying that competitor's fees if it is unsuccessful.

At the very least, the standard should clarify the meaning of "subjective bad faith" as merely a gross negligence or recklessness standard on par with the willful infringement standard, *i.e.*, district court should have discretion to deem a case exceptional and award reasonable attorney fees where a patentee institutes and maintains a patent infringement case having an objectively low likelihood of success and the patentee knew *or should have* known it.

CONCLUSION

For the foregoing reasons, Octane Fitness, LLC respectfully requests that the Court grant this Petition for Writ of Certiorari.

Dated: March 27, 2013

Respectfully submitted,

RUDOLPH A. TELSCHER, JR.,
Counsel of Record
KARA R. FUSSNER
HARNESS, DICKEY & PIERCE, PLC
7700 Bonhomme Avenue,
Suite 400
St. Louis, MO 63105
(314) 726-7500
rtelscher@hdp.com

Attorneys for Petitioner,
Octane Fitness, LLC

APPENDIX

APPENDIX A — ORDER OF THE UNITED STATES COURT OF APPEALS FOR THE FEDERAL CIRCUIT, FILED JANUARY 7, 2013

UNITED STATES COURT OF APPEALS
FOR THE FEDERAL CIRCUIT

2011-1521, 1636

ICON HEALTH & FITNESS, INC.,

Plaintiff-Appellant,

v.

OCTANE FITNESS, LLC,

Defendant-Cross-Appellant.

Appeals from the United States District Court for the District of Minnesota in Case No. 09-CV-0319, Judge Ann D. Montgomery.

Decided: October 24, 2012

Before RADER, *Chief Judge*, NEWMAN and LOURIE, *Circuit Judges*.

LOURIE, *Circuit Judge*.

ICON Health & Fitness, Inc. ("ICON") appeals from the final judgment of the United States District Court for the District of Minnesota, which granted summary

judgment of noninfringement of claims 1-5, 7, and 9-10 of U.S. Patent 6,019,710 (the "'710 patent"). *ICON Health & Fitness, Inc. v. Octane Fitness, LLC*, No. 09-319 ADM/SER, 2011 WL 2457914 (D. Minn. Jun. 17, 2011) (the "*Summary Judgment Op.*"). Octane Fitness, LLC ("Octane") cross-appeals the court's denial of a motion to find the case exceptional under § 285. Because the court did not err in its underlying claim construction, in granting summary judgment of noninfringement, and in denying the motion to find the case exceptional, we *affirm*.

Background

The '710 patent, owned by ICON, is directed to an elliptical machine that allows for adjustable stride length. The patent claims at issue focus on the "linkage system" connecting the foot rail to the frame via the "stroke rail."

Appendix A

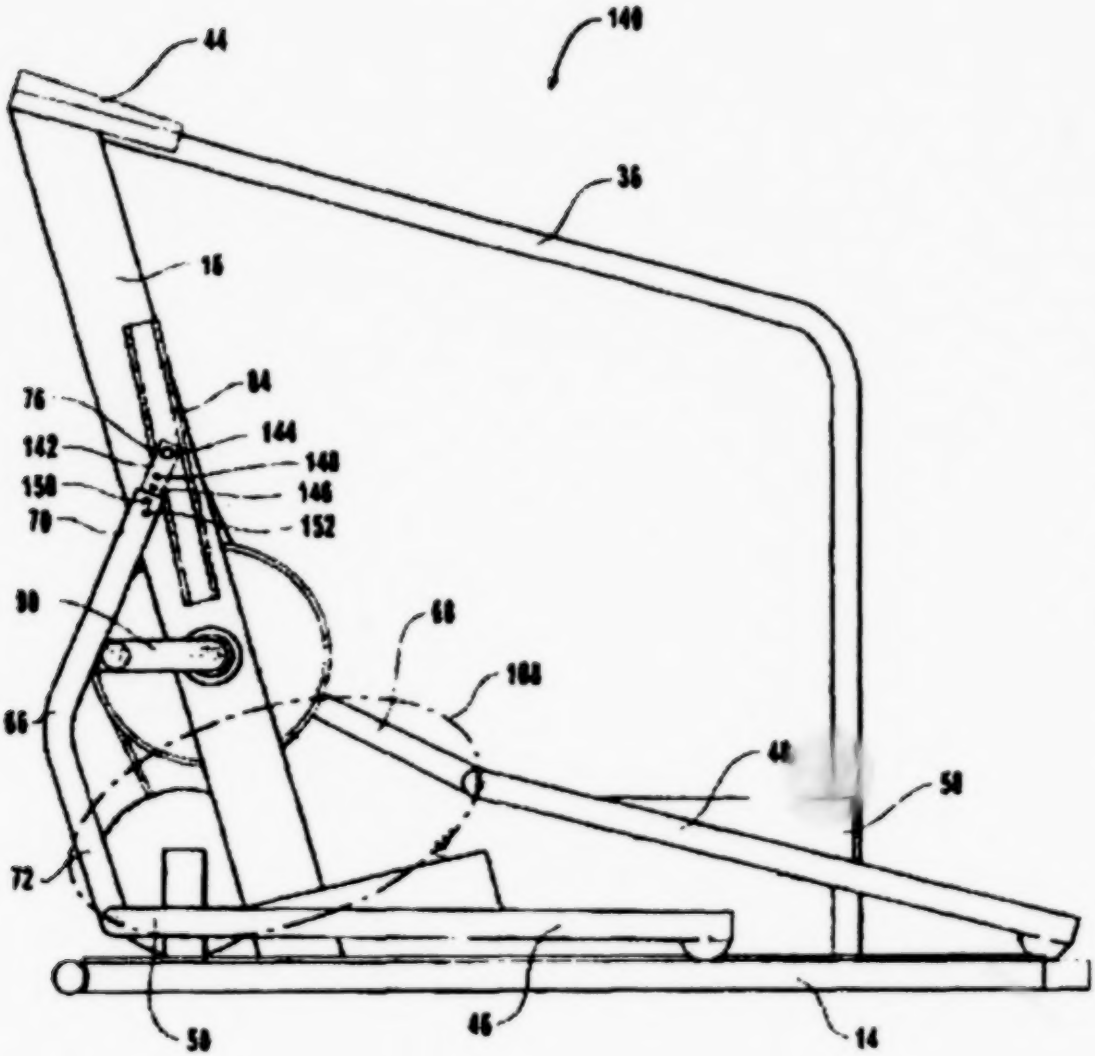

FIG. 5

As described in the specification and shown in Figure 5 above, the stroke rail (66) is attached to the frame in three places: to the forward end of a foot rail (72, 50); to a rotatable crank arm connected to an axle (90); and to the frame via a pin mounted within a C-shaped channel,

encircling the pin (76, 84). The stride length is adjusted by changing the length of the stroke rail using either manual adjustment (slots and pins, *e.g.*, 142) or a motor with a gear as shown in Figure 6:

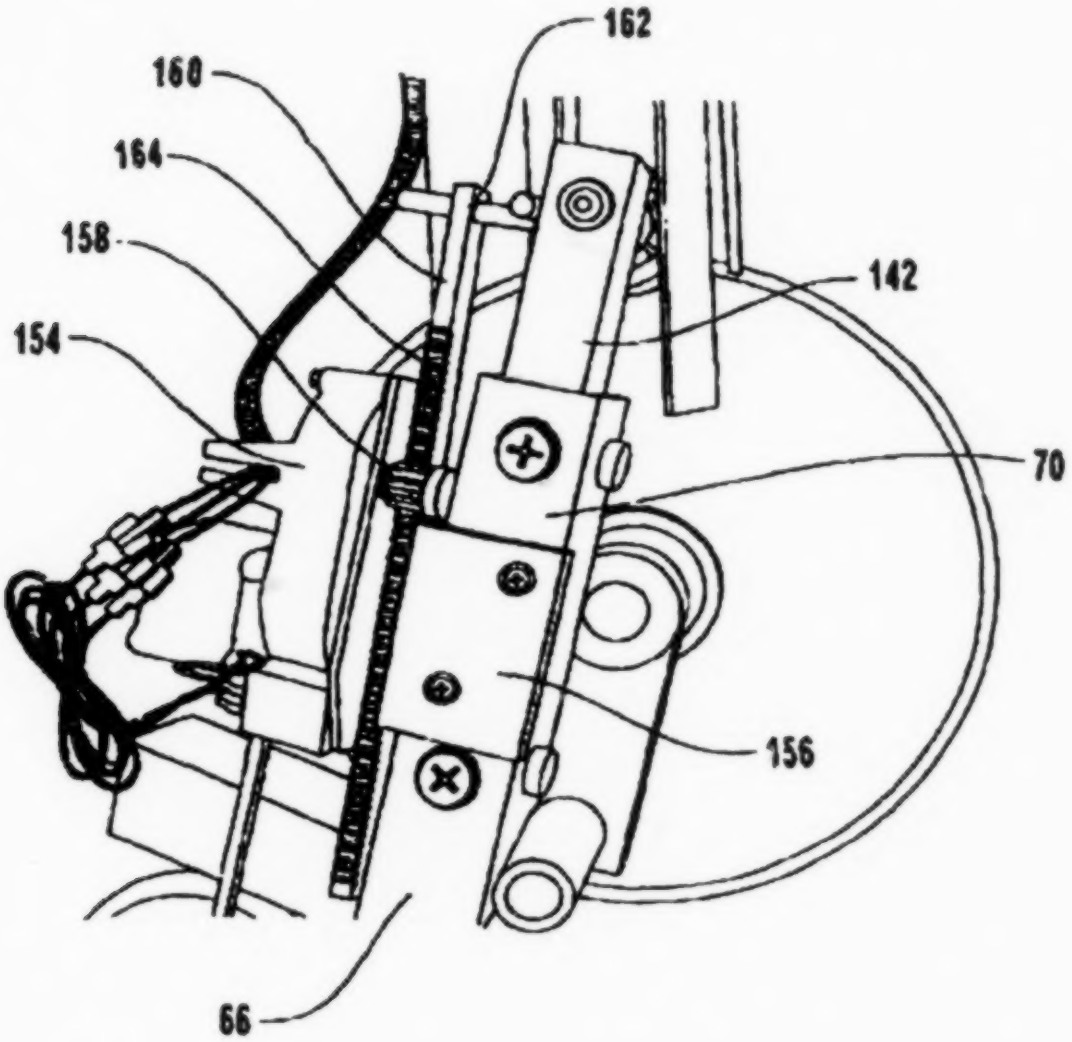

FIG. 6

Appendix A

ICON filed a complaint against Octane alleging that Octane's elliptical machines infringe claims 1, 2-5, 7, and 9-11 of the '710 patent. Octane sells two families of elliptical machines, the Q45 and Q47; those machines and their linkage systems are licensed under U.S. Patent 5,707,321 (the "Maresh patent"), which is prior art to the '710 patent. The primary differences between the Q45 and Q47 models and the '710 patent that are relevant in the current appeal are that (1) Octane's machines do not use a C-shaped channel and pin to attach to the frame, instead using a "rocker link" (a lever-based design); and (2) Octane's alleged "stroke rail" has multiple parts, including a motor, and is not a single rail.

Claim 1 is representative of the contested claims:

1. An exercise apparatus comprising:

(a) a frame configured for resting on a ground surface;

(b) a pair of spaced apart foot rails each having a first end and an opposing second end, each foot rail being configured to receive a corresponding foot of a user;

(c) a pair of *stroke rails* each having a first end and an opposing second end, the second end of each stroke rail being hingedly attached to the first end of a corresponding foot rail;

(d) *means for connecting* each stroke rail to the frame such that linear reciprocating

displacement of the first end of each stroke rail results in displacement of the second end of each stroke rail in a substantially elliptical path; and

(e) means for selectively varying the size of the substantially elliptical path that the second end of each stroke rail travels.

'710 patent col. 7 ll. 11-26 (emphases added).

The court construed "stroke rail" to be "a linear or curved rail, which may be made to vary in length, extending from a foot rail to a frame on an elliptical machine," and which can be both a "unitary stroke rail and an adjustable stroke rail" with multiple parts "used to vary the length of the stroke rail." *ICON Health & Fitness, Inc. v. Octane Fitness, LLC*, No. 09-319 ADM/SER, 2010 WL 5376209, at *3 (D. Minn. Dec. 22, 2010) (the "*Claim Construction Op.*"). The court construed "means for connecting" as a means-plus-function limitation, identifying the corresponding structure as including both the C-shaped channel and pin structure as well as the crank arm structure. *Id.* at *5-6 (adopting Octane's proposed list of structures). The court found no need to construe the function of the means. *Id.* at *4.

On summary judgment, the district court concluded that the "stroke rail" and "means for connecting" limitations were absent in the Q45 and Q47 machines and granted summary judgment of noninfringement. The court held that the Q45 and Q47 did not have a stroke rail

that "extends from a foot rail to the frame," but instead has an intervening rocker link. The court also held that the accused devices could not infringe under the doctrine of equivalents because the linkage system used was present in the prior Maresh patent and ICON did not propose a hypothetical claim that did not encompass Maresh. As for the "means for connecting" limitation, the court found that there was no evidence that the Q45 and Q47 machines underwent linear displacement. The court also found that there was no infringement by equivalence because linear displacement was required by the claims and was critical to the invention as stated both by the examiner in the reasons for allowance and by ICON's expert, and also because the arc-like movement of the rocker link was present in the prior Maresh patent. The court also held that the rocker link was not an equivalent structure to the C-shaped channel. The court denied a subsequent motion to find the case exceptional. ICON timely appealed. We have jurisdiction under 28 U.S.C. § 1295(a)(1).

DISCUSSION

I.

We review *de novo* the district court's grant of summary judgment, drawing all reasonable inferences in favor of the nonmovant. *Anderson v. Liberty Lobby, Inc.*, 477 U.S. 242, 255, 106 S. Ct. 2505, 91 L. Ed. 2d 202 (1986); *Hologic, Inc. v. SenoRx, Inc.*, 639 F.3d 1329, 1334 (Fed. Cir. 2011). Summary judgment is appropriate when there is "no genuine dispute as to any material fact and the movant is entitled to judgment as a matter of law." Fed.

R. Civ. P. 56(a). Infringement, whether literal or under the doctrine of equivalents, is a question of fact, which we review on appeal from a grant of summary judgment of non-infringement without deference. *Schindler Elevator Corp. v. Otis Elevator Co.*, 593 F.3d 1275, 1281 (Fed. Cir. 2010). We address claim construction as a matter of law, which we review without formal deference on appeal, although we give respect to the reasoning of the district courts. *See Cybor Corp. v. FAS Techs., Inc.*, 138 F.3d 1448, 1456 (Fed. Cir. 1998) (en banc).

A.

ICON argues that the district court erred in construing "means for connecting" and in its summary judgment determination of noninfringement. According to ICON, the phrase for "means for connecting" is a means-plus-function limitation, where the function is "connecting," and the crank arm attached to the middle of the stroke rail is the corresponding structure. As the accused devices have both of these features, ICON argues that it was error to grant summary judgment of noninfringement. Alternatively, ICON argues that if the "means for connecting" includes the C-shaped channel and pin, then the accused devices still have an equivalent structure: the rocker link that moves in a substantially straight path.

Octane responds that the claim term "means for connecting" requires "linear reciprocating displacement" and that the only structure disclosed in the patent that performs that function is the C-shaped channel design. Octane contends that the claim requires the motion to

be "linear" and notes that the rocker link in the accused products moves in an arcuate manner. Because Octane's devices do not contain a structure similar to the C-shaped channel and do not move in a linear manner, Octane argues that the district court properly granted summary judgment of noninfringement.

Neither party disputes that "means for connecting" is a means-plus-function limitation. Additionally, the claim language makes clear that the function of the "means for connecting" is to connect "each stroke rail to the frame such that linear reciprocating displacement of the first end of each stroke rail results in displacement of the second end of each stroke rail in a substantially elliptical path." '710 patent col. 7 ll. 19-23. To identify the proper structure, we look for the structure disclosed in the specification that actually performs the recited function. *Cardiac Pacemakers, Inc. v. St. Jude Med., Inc.*, 296 F.3d 1106, 1119 (Fed. Cir. 2002).

We agree with the district court that the corresponding structure here must both connect the stroke rail to the frame and allow the first end to undergo linear displacement. There are two structures recited in the specification that connect the stroke rail to the frame. First, the specification clearly identifies the crank arm attached to the middle of the stroke rail as part of that structure. '710 patent col. 4 ll. 26-51. Second, the specification also describes another attachment at the first end of the stroke rail to the frame via the C-shaped channel and pin structure. *Id.* at col. 4 ll. 3-17. While that second connection is not specifically identified as a "means for connecting" in the specification, it is required to enable the

claimed function, including the linear displacement of the first end. Indeed, the C-shaped channel and pin structure attached to the first end is necessary "to simultaneously enable annular rotation and linear displacement of the first end 70," as previously shown in Figure 5 above (76, 84). *Id.* at col. 4 ll. 3-6. These two connections work in tandem both to connect the stroke rail to the frame and to allow the linear displacement of the first end of the stroke rail to result in a substantially elliptical path of the second end.

ICON argues that the C-shaped channel and pin cannot constitute a connecting means because it is described in the specification as the "attaching means." ICON relies on the specification's lack of discussion of the C-shaped channel and pin structure in the "connecting means" paragraph to argue that the connecting means cannot include the C-shaped channel and pin. However, that argument is without merit. No claim uses the phrase "attaching means" or "means for attaching" to describe the C-shaped channel. Instead, the claim language uses "attached" and "connected" interchangeably. For example, claim 24 states that "the crank arm" is "attached to the first stroke rail . . . being attached so as to enable rotation of the crank arm." *Id.* at col. 9 ll. 6-9. That is the same crank arm that the specification states is part of the "connecting means." Regardless, it is the combination of the C-shaped channel and pin, and the crank arm, that performs the recited function. That the C-shaped channel is also described as the "attaching means" does not change that fact for the purposes of section 112(6). Accordingly, the district court did not err in construing the term "means for connecting."

Applying that construction, it is undisputed that the accused products do not contain the C-shaped channel and pin structure. Octane's products instead employ a "rocker link" that is a bar pivotally attached at one end to the end of the stroke rail and pivotally attached at the other end to the frame. When in motion, the rocker link rotates around its frame-anchored end in an arcuate motion. ICON argues that the slightly arcuate motion of the rocker link is equivalent to the linear motion of the C-shaped channel. However, arcuate motion, at least in this case, is not equivalent to linear motion.

ICON's expert testified at his deposition that the linkage system was patentable in part because it "convert[s] the reciprocating motion of one end *along a linear path* to [an] essentially elliptical path . . . ." J.A. 1729 (emphasis added). Indeed, the examiner, in his reasons for allowance, made a similar statement in distinguishing prior art:

> The prior art fails to show or teach applicant's claimed exercise apparatus comprising . . . a pair of stroke rails each having one end hingedly connected to a respective foot rail and *having the opposite end connected to the frame for linear reciprocating movement* and for producing an elliptical path.

J.A. 1697 (emphasis added). If ICON had wanted the claim to cover other types of nonlinear motion, such as an arcuate path, it could have simply omitted the term "linear" to broaden the claims. In the context of these

claims, the structure of a lever design that moves in an arcuate pattern is not equivalent to a C-shaped channel design that locks in a pin to move in a straight line.

ICON also argues that because claims 8 and 22 state that the first end of a stroke rail is "slidably attached" to the frame, the "means for connecting" in claim 1 cannot also include the same slidably attached structure under the theory of claim differentiation. That supposition is incorrect. In *Laitram Corp.*, the plaintiff argued that a means-plus-function limitation, "means for joining," could not include a structure of a "cross member" because another dependent claim specifically required such a cross member. *Laitram Corp. v. Rexnord, Inc.*, 939 F.2d 1533, 1538 (Fed. Cir. 1991). We disagreed and stated:

> A means-plus-function limitation is not made open-ended by the presence of another claim specifically claiming the disclosed structure which underlies the means clause or an equivalent of that structure. If [plaintiff's] argument were adopted, it would provide a convenient way of avoiding the express mandate of section 112(6).

Id. In other words, claim differentiation cannot override the effect of section 112(6). As noted in *Laitram Corp.*, the scope of the limitation literally covers structures described in the specification and equivalents thereof not withstanding the existence of dependent claims.

In summary, as the supposed equivalents in the accused products do not perform the same function by

moving in a linear fashion and do not contain a structure equivalent to the C-shaped channel and pin, the accused products cannot literally infringe the claims. *See Odetics, Inc. v. Storage Tech. Corp.*, 185 F.3d 1259, 1267 (Fed. Cir. 1999). Moreover, the lack of equivalent structure for the "means for connecting" limitation for literal infringement also precludes finding equivalence under the doctrine of equivalents. *See Chiuminatta Concrete Concepts, Inc. v. Cardinal Indus., Inc.*, 145 F.3d 1303, 1311 (Fed. Cir. 1998) ("[A] finding of non-equivalence for § 112, ¶ 6, purposes should preclude a contrary finding under the doctrine of equivalents.").

B.

ICON also argues that the court erred in its construction of "stroke rail" and thus in its determination that the accused devices do not infringe the '710 patent. Specifically, ICON contends that "stroke rail" does not require extension "from a foot rail to a frame" and can include additional parts, such as a motor or a rocker link on the accused products. ICON proposes an alternative construction that requires, at most, that the stroke rail be "attached to a foot rail" and "connected to the frame" without regard to the number of intervening parts.

Octane responds, noting that the specification and claim language both describe the stroke rail as extending from the foot rail to the frame. In particular, Octane contends that every time the word "stroke rail" is used in the specification, it references number 66 or 68 in the figures, a bar that is shown extending from the foot rail

to the frame. Octane also notes that in allowing the claims the examiner stated that the stroke rails each have one end connected to the foot rail and to the opposite end connected to the frame. Finally, Octane points out that ICON's definition would broaden the scope of the '710 patent to an infinite combination of parts between the stroke rail and frame. We agree with Octane that the district court did not err in its construction of "stroke rail" or its subsequent grant of summary judgment of noninfringement.

Starting with the language of the claims themselves, the stroke rails "each hav[e] a first end and an opposing second end, the second end of each stroke rail being hingedly attached to the first end of a corresponding foot rail." '710 patent col. 7 ll. 16-19. That claim language requires a direct attachment of one end of the stroke rail to the foot rail.

The other end (the "first" end) of the stroke rail is described in the next limitation via a "means for connecting": "means for connecting each stroke rail to the frame" in such a way that allows for "linear reciprocating displacement of the first end." *Id.* at col. 7 ll. 19-23. The specification describes only one such location and type of connection to the frame that allows linear reciprocating displacement of the first end of the stroke rail. The specification states that "[e]ach stroke rail also has a first end slidably attached to the support stand of the frame." *E.g.*, *id.* at col. 2 ll. 10-13. That connection is depicted in each figure as the C-shaped channel and pin. Consistent with that understanding, the examiner found the claims

novel over the prior art in his reasons for allowance in part because the stroke rails have "one end hingedly connected to a respective foot rail and having the opposite end connected to the frame." J.A. 1697. Thus, the claims, when read in light of the specification, require that a stroke rail extend from the foot rail to the frame, with each end attached to the frame using a hinge on one end and a C-shaped channel on the other. The district court was therefore correct to require that the stroke rail extend from the foot rail to the frame.

The accused products, to the extent they have a stroke rail, connect one end of that stroke rail to the frame using a number of parts including a motor, an integrated screw, a swing arm, a bracket holding the motor, and other pieces. The other end is connected to the frame using the previously discussed rocker link. We agree with the district court that the rocker link "is a separate, independently moving, intervening element of the linkage system interposed between the frame and the proposed stroke rail, and its presence prevents the stroke rail from extending to the frame." *Summary Judgment Op.*, 2011 WL 2457914, at *12. It is undisputed that the rocker link is not part of the stroke rail and is not a means for connecting as discussed above. Thus, because the alleged stroke rail extends from the rocker link, not the frame, there was no genuine material issue of fact that the accused products do not contain a stroke rail that extends from the foot rail to the frame.

As for the doctrine of equivalents, we have previously held that a patentee also cannot assert equivalents that

would encompass—or "ensnare"—the prior art. *See Depuy Spine, Inc. v. Medtronic Sofamor Danek, Inc.*, 567 F.3d 1314, 1322 (Fed. Cir. 2009); *Wilson Sporting Goods Co. v. David Geoffrey & Assoc.*, 904 F.2d 677, 684 (Fed. Cir. 1990) ("[A] patentee should not be able to obtain, under the doctrine of equivalents, coverage which he could not lawfully have obtained from the PTO by literal claims."), *overruled in part on other grounds by Cardinal Chem. Co. v. Morton Intern., Inc.*, 508 U.S. 83, 113 S. Ct. 1967, 124 L. Ed. 2d 1 (1993). Octane contends that its linkage system is covered by the Maresh patent, and, as prior art, such a linkage system lies beyond the reach of the doctrine of equivalents as a matter of law.

In circumstances such as these, where there is evidence that prior art would be included in an asserted range of equivalents, the patentee must show that its proposed equivalent does not encompass the prior art. *Streamfeeder, LLC v. Sure-Feed Sys., Inc.*, 175 F.3d 974, 983 (Fed. Cir. 1999). Here, Octane presented evidence that ICON's asserted range of equivalents would encompass the Maresh patent, a conclusion with which the district court agreed. *Summary Judgment Op.*, 2011 WL 2457914, at *12. ICON, in response, argued that the Maresh patent does not anticipate the '710 patent because it is missing the "means for selectively varying" limitation. However, even a cursory read of the Maresh patent shows a discussion of altering the elliptical path by changing the length of the linkage system parts. Maresh patent, col. 10 ll. 13-19 ("To change the shape of the elliptical path . . . adjust and change the length of any or all of the three dynamic links (cranks, connector links, and rockers)."). Thus, ICON has

failed to meet its burden of persuasion. The district court was correct in determining that the equivalents alleged by ICON are outside the scope of the '710 patent because they ensnare the prior art; thus the accused products do not infringe the claims.

II.

Octane argues in its cross-appeal that the court applied an overly restrictive standard in refusing to find the case exceptional under § 285. Octane relies on ICON's allegedly unreasonable claim construction positions, its privilege assertions over its pre-suit investigation, and e-mails allegedly supporting bad faith litigation in an effort to "go after" Octane. In addition, Octane seeks to lower the standard for exceptionality to "objectively unreasonable" to rebalance what it alleges as the power of large companies over smaller companies in patent infringement litigation. However, we have reviewed the record and conclude that the court did not err in denying Octane's motion to find the case exceptional. We have no reason to revisit the settled standard for exceptionality.

CONCLUSION

We have considered the parties' remaining arguments and conclude that they are without merit. For the foregoing reasons, the judgment of the district court is

AFFIRMED

APPENDIX B — JUDGMENT OF THE UNITED STATES COURT OF APPEALS FOR THE FEDERAL CIRCUIT, FILED JANUARY 7, 2013

UNITED STATES COURT OF APPEALS
FOR THE FEDERAL CIRCUIT

2011-1521, -1636

ICON HEALTH & FITNESS, INC.,

Plaintiff-Appellant,

v.

OCTANE FITNESS, LLC,

Defendant-Cross-Appellant.

JUDGMENT

ON APPEAL from the	UNITED STATES DISTRICT COURT FOR THE DISTRICT OF MINNESOTA
in CASE NO(S).	09-cv-0319

This CAUSE having been heard and considered, it is ORDERED and ADJUDGED:

AFFIRMED

ENTERED BY ORDER OF THE COURT

/s/_____
Jan Horbaly, Clerk

DATED: Oct. 24, 2012

APPENDIX C — MEMORANDUM OPINION AND ORDER OF THE UNITED STATES DISTRICT COURT, DISTRICT OF MINNESOTA, FILED SEPTEMBER 6, 2011

UNITED STATES DISTRICT COURT
DISTRICT OF MINNESOTA

Civil No. 09-319 ADM/SER

ICON HEALTH & FITNESS, INC.,
a Delaware corporation,

Plaintiff,

v.

OCTANE FITNESS, LLC, a Minnesota limited liability company; and NELLIE'S EXERCISE EQUIPMENT, INC., a California corporation,

Defendants.

MEMORANDUM OPINION AND ORDER

I. BACKGROUND

This is a patent infringement case concerning the linkage systems on elliptical exercise machines. On December 22, 2010, the Court construed the disputed claims of U.S. Patent No. 6,019,710 (the "'710 patent") [Docket No. 144]. Based on these constructions, on June 17, 2011, the Court issued a Memorandum Opinion & Order granting summary judgment of noninfringement in favor

of Defendant Octane Fitness, LLC ("Octane") [Docket No. 187]. Plaintiff Icon Health & Fitness, Inc. ("Icon") appealed these rulings to the Federal Circuit [Docket No. 200]. The facts are set forth more fully in the Court's prior orders, and will not be repeated here.

Octane, the prevailing party on summary judgment, now moves for an award of attorney's fees under 35 U.S.C. § 285. Icon opposes the motion. For the following reasons, Octane's motion is denied.[1]

II. DISCUSSION

A court "may award reasonable attorney fees to the prevailing party" in exceptional patent cases, both to compensate the prevailing party for its litigation expenses, and also to deter the filing of baseless infringement suits. *See* 35 U.S.C. § 285; *Automated Bus. Cos. v. NEC America, Inc.*, 202 F.3d 1353, 1355 (Fed. Cir. 2000); *Mathis v. Spears*, 857 F.2d 749, 753 (Fed. Cir. 1988). A two-step analysis is required. *Forest Labs., Inc. v. Abbott Labs.*, 339 F.3d 1324, 1327 (Fed. Cir. 2003). First, the prevailing party must establish by clear and convincing evidence that the case is exceptional; if so, the court may

1. Octane has moved for leave to file a reply brief [Docket No. 213], and has attached the proposed brief as an exhibit. The motion will be denied. The arguments set forth in the proposed reply are largely repetitive of those presented in Octane's main brief, and any new arguments are without legal support. Octane's decision to seek advice from its counsel is wholly irrelevant to the question of whether Icon's conduct makes this case exceptional under 35 U.S.C. § 285.

award fees as a matter of discretion. *Id.* Courts award attorney fees to prevailing accused infringers only when "necessary to prevent 'a gross injustice' to the accused infringer." *Id.* at 1329 (citations omitted). The second step need not be reached because this case is not exceptional.

"[A]bsent misconduct during patent prosecution or litigation," a case is exceptional "only if both (1) the litigation is brought in subjective bad faith, and (2) the litigation is objectively baseless.'" *iLOR, LLC v. Google, Inc.*, 631 F.3d 1372, 1377 (Fed. Cir. 2011) (quoting *Brooks Furniture Mfg., Inc. v. Dutailier Int'l, Inc.*, 393 F.3d 1378, 1381 (Fed. Cir. 2005)). Both requirements must be established by clear and convincing evidence. *Brooks Furniture*, 393 F.3d at 1382. If either requirement is not met, the case is not exceptional. *Id.* at 1381. Here, neither requirement is met.

Patent litigation is objectively baseless when a party's assertions are "so unreasonable that no reasonable litigant could believe [they] would succeed." *iLOR*, 631 F.3d at 1378.

This determination "requires an objective assessment of the merits" based on the record made in the infringement proceedings. *Id.* at 1377-78. The patentee's "[s]tate of mind is irrelevant" to this objective inquiry. *Id.* at 1377. So is the fact that the patentee's arguments were unsuccessful. "Claim interpretation is not always an exact science, and it is not unusual for parties to offer competing definitions of even the simplest claim language." *iLOR*, 631 F.3d at 1379 (internal quotation omitted). A proposed

claim construction is not frivolous if not precluded by the language of the claim or the disclosures in the specification. *See id.* at 1378. Similarly, the mere fact that a court found no infringement is not sufficient to establish the action was objectively baseless. *See MTS Sys. Corp. v. Hysitron Inc.*, 639 F. Supp. 2d 996, 1002 (D. Minn. 2009), *aff'd*, 370 Fed. Appx. 111 (Fed. Cir. 2010) (unpublished).

Octane argues Icon's infringement action was objectively baseless because the Court rejected Icon's arguments that (1) several elements of Octane's machines collectively comprised a "stroke rail" which "extends from a foot rail to a frame;" (2) "linear reciprocating displacement" did not require movement in a linear path; and (3) several elements of Octane's machines infringed the '710 patent literally and under the doctrine of equivalents. In Octane's view, the Court's rulings should have been a foregone conclusion to anyone who visually inspected its machines' linkage system, making Icon's infringement assertions "unreasonable and unsupportable." Octane Mem. [Docket No. 196] at 15.

The Court does not agree that the conclusions were so easily reached. Icon argued that several parts of Octane's linkage system collectively comprised a "stroke rail" that "extend[ed] from a foot rail to a frame," as required by claim 1(c). *See* '710 Patent [Docket No. 158. Ex. 1] at col. 7 ll. 16-19. "Stroke rail" has no definition in the patent or in the industry, but the specification clearly indicates it is comprised of more than one part. Indeed, the meaning of "stroke rail" was so unclear that for several months Octane conceded its Q47 machine had a "stroke

rail" – until it withdrew that concession in an amended claim construction chart. Icon's argument that Octane's machines had a "stroke rail," although not ultimately persuasive, was not frivolous.

Icon also argued for a construction of the term "linear reciprocating displacement" in claim 1(d) that did not require "movement along a linear path." Octane argues such a construction was at odds with both the plain meaning of "linear," the intrinsic evidence of the patent, and the notice of allowance, which identified "linear reciprocating displacement" as a reason why the patent was allowable over prior art. Icon's proposed construction was rejected.

Although the Court remains confident in its construction of claim 1(d), the rejected construction is not frivolous. Claim 1(d) is a means-plus-function claim, claiming the function of "connecting each stroke rail to the frame such that linear reciprocating displacement of the first end of each stroke rail results in displacement of the second end of each stroke rail in a substantially elliptical path." '710 Patent at col. 7 ll. 20-24. Icon argued that the "means for connecting" element needed only to be "capabl[e] of converting 'linear reciprocating displacement' into elliptical motion." Icon Claim Constr. Brief [Docket No. 131] at 23. Icon also argued that the "very slight arcuate motion" present in Octane's machine was substantially equivalent to linear motion, and that "the same mechanism" which converted the slight arcuate motion into elliptical motion "would also convert precisely linear motion at the first end of the stroke rail to elliptical

motion at the second end of the stroke rail." *Id.* at 24 (emphasis omitted). In support of its argument, Icon relied on several Federal Circuit decisions suggesting that means-plus-function claims required structure merely capable of performing the function, rather than structure that actually performed the function. *Id.* at 25. Relying on expert testimony and technical dictionaries, Icon also argued the word "displacement" would not have been understood by those skilled in the art to require movement along a straight-line path. *Id.* at 27-28. Although ultimately unsuccessful, Icon's arguments were not objectively baseless.

At the summary judgment stage, Icon argued that claim 1(d) was literally infringed because structures in Octane's machine "convert linear reciprocating displacement at the first end of the actuator-casting stroke rail into a 'substantially elliptical path' at the second end of the stroke rail." Icon Mem. Opp. S. J. [Docket No. 175] at 21. In support, Icon relied on page 7 of its expert's report, which employed the proposed construction of "linear reciprocating displacement" that was rejected by the Court. *Id.* Icon now characterizes this assertion as "not an argument that Octane's machines had 'linear reciprocating displacement' but rather an argument that the claim did not require a structure that created linear reciprocating displacement, only a structure that performed the claimed 'connecting' function." Icon Mem. Opp. Fees [Docket No. 205] at 7 n.1. This assertion suggests Icon did not intend to be misleading in its summary judgment argument, but merely to reargue a point that had been previously decided against it. Although arguably confused and repetitive,

and ultimately unavailing, Icon's summary judgment argument was not objectively baseless.

In the context of design patents, a visible difference in design may foreclose an infringement action. *See Brooks Furniture*, 393 F.3d at 1383. Here, however, a visible difference is not determinative. Infringement is determined by comparing the accused devices to the properly-construed claims and specifications of the patent. *See IMS Tech., Inc. v. Haas Automation, Inc.*, 206 F.3d 1422, 1429 (Fed. Cir. 2000). Icon represents, and the Court has no reason to doubt, that it purchased and inspected a Q47 machine prior to filing suit, and that it secured opinions from experts and counsel that the machine infringed its patent. The visible differences between the linkage systems of both machines did not make it unreasonable to rely on testing and opinions as to infringement. While Icon's arguments on claim construction and infringement proved to be unpersuasive, again, the arguments are not objectively baseless.

Because Icon's case was not objectively baseless, the inquiry could end here. However, Octane's argument that Icon brought suit in bad faith will be briefly addressed. Subjective bad faith means "the plaintiff's case must have no objective foundation, and the plaintiff must actually know this." *iLOR*, 631 F.3d at 1377. For example, a patentee who had "actual knowledge that the [infringement] suit was baseless" and also "complete[ly] fail[ed] to conduct pre-suit investigation in the form of appropriate testing to establish infringement" may demonstrate subjective bad faith. *See MTS Sys.*, 639 F. Supp. 2d at 1002 (citing

Eltech Sys. Corp. v. PPG Indus., Inc., 903 F.2d 805, 808 (Fed. Cir. 1990)). Similarly, a patentee who stipulated that the accused device did not infringe, but refused to dismiss the suit, and opposed defendant's motion for summary judgment of noninfringement, so that it might obtain discovery about defendant's other potentially infringing products, was acting in bad faith. *Automated Bus. Cos.*, 202 F.3d at 1354. By contrast, evidence that a patentee has sought reasonable expert evaluation of the accused device, and opinions of counsel, weighs against a finding of subjective bad faith. *See Brooks Furniture*, 393 F.3d 1383. Subjective bad faith does not exist where infringement can reasonably be disputed. *Id.* at 1384. "Infringement is often difficult to determine, and a patentee's ultimately incorrect view of how a court will find does not of itself establish bad faith." *Id.*

Here, as evidence of bad faith, Octane offers (1) an email exchange between two Icon sales executives suggesting the litigation was undertaken as a matter of commercial strategy; and (2) the fact that Icon is a bigger company which never commercialized the '710 patent. These circumstances do not establish by clear and convincing evidence that Icon undertook its lawsuit in bad faith.

The emails tend to show that in late August 2008, some five months after this action was originally filed in the Central District of California [Docket No. 57, Ex. 1], an Icon employee with the title of Vice President of Global Sales reported to two other employees, "We are suing Octane. Not only are we coming out with a great product

to go after them, but throwing a lawsuit on top of that." Octane Mem. [Docket No. 196] at 1. The next day, one of the recipients forwarded the email to a third party, with the message, "Just clearing the way and making sure you guys have all your guns loaded! Look below!" *Id.* at 2. In September 2009, more than a year later, the sender of the original message apparently responded to an inquiry from the sender of the second message ("Subject: RE: I heard we are suing Octane!") stating, "Yes – old patent we had for a long time that was sitting on the shelf. They are just looking for royalties." *Id.*

Viewed in the light most favorable to Octane, these remarks are stray comments by employees with no demonstrated connection to the lawsuit. The statements do not reflect advice to Icon by its counsel or experts, nor are they evidence of Icon's official position on the merits of the lawsuit. A company salesman's opinion of a lawsuit does not tend to prove that the company's leadership and counsel pursued the lawsuit in bad faith. There is no evidence the remarks were ever seen, much less adopted by, those in a position to decide whether to pursue an infringement action against Octane.

Even if the emails suggest Icon commenced this lawsuit to gain a competitive advantage against a smaller company, that fact does not make the lawsuit frivolous. "A duly granted patent is a grant of the right to exclude all infringers, not just those of comparable size." *Brooks Furniture*, 393 F.3d at 1384. Neither is it relevant that Icon never commercialized the '710 patent. Simply bringing suit to gain a competitive advantage is not evidence of bad

faith. "Enforcement of patent rights that are reasonably believed to be infringed does not entail special penalty when the patentee is unsuccessful." *Id.* In sum, even if this action were objectively baseless – which it is not – neither the email exchange, nor the relative size of the parties, nor Icon's decision not to commercialize the '710 patent, are clear and convincing evidence of subjective bad faith on Icon's part. This case is not exceptional, and an award of attorney's fees is not warranted.

III. ORDER

Based upon the foregoing, and all of the files, records and proceedings herein, **IT IS HEREBY ORDERED** that Octane's motion for an award of attorney's fees [Docket No. 194] is **DENIED**. Octane's motion for leave to file a reply brief [Docket No. 213] is also **DENIED**.

BY THE COURT:

/s/_____

ANN D. MONTGOMERY
U.S. DISTRICT JUDGE

Dated: September 6, 2011.

APPENDIX D — JUDGMENT OF THE UNITED STATES DISTRICT COURT, DISTRICT OF MINNESOTA, FILED JULY 15, 2011

UNITED STATES DISTRICT COURT
District of Minnesota

Case Number: 0:09-cv-00319 (ADM/SER)

ICON HEALTH & FITNESS, INC.,
a Delaware corporation

V.

OCTANE FITNESS, LLC, a Minnesota
limited liability company

JUDGMENT IN A CIVIL CASE

☐ **Jury Verdict.** This action came before the Court for a trial by jury. The issues have been tried and the jury has rendered its verdict.

☒ **Decision by Court.** This action came to trial or hearing before the Court. The issues have been tried or heard and a decision has been rendered.

IT IS ORDERED AND ADJUDGED THAT:

1. The recitals set forth in the Stipulation filed on July 14, 2011 are adopted by the Court and incorporated as if set forth in this Order; and

2. Final judgment shall be and hereby is entered against ICON on its complaint against Octane for infringement of the '710 patent and in favor of Octane on its counterclaim for a declaratory judgment of noninfringement of the '710 patent; and

3. Octane's counterclaim for invalidity of the '710 patent shall be and hereby is dismissed without prejudice; and

4. No other claims remain to be adjudicated.

July 15, 2011 RICHARD D. SLETTEN, CLERK
Date

/s/
(By) L. Brennan, Deputy Clerk

APPENDIX E — MEMORANDUM OPINION AND ORDER OF THE UNITED STATES DISTRICT COURT, DISTRICT OF MINNESOTA, FILED JUNE 17, 2011

UNITED STATES DISTRICT COURT
DISTRICT OF MINNESOTA

Civil No. 09-319 ADM/SER

Icon Health & Fitness, Inc., a Delaware corporation,

Plaintiff,

v.

Octane Fitness, LLC, a Minnesota limited liability company; and Nellie's Exercise Equipment, Inc., a California corporation,

Defendants.

MEMORANDUM OPINION AND ORDER

I. INTRODUCTION

On March 29, 2011, a hearing was held before the undersigned United States District Judge in this patent infringement action by Plaintiff Icon Health & Fitness, Inc. ("Icon") against Defendant Octane Fitness, LLC ("Octane"). Icon alleges that Octane infringed claims 1-5, 7, and 9-11 of U.S. Patent No. 6,019,710 (the "'710 patent"). Octane denies the infringement allegations and moves

for summary judgment of non-infringement. Octane also moves to strike portions of Icon's expert report. For the following reasons, the motion to strike is denied and the motion for summary judgment of non-infringement is granted.

II. BACKGROUND[1]

The '710 patent, entitled "Exercising Device with Elliptical Movement," covers an elliptical exercise machine designed to take up less floor space than prior art models and to allow for adjustable stride length.

The elliptical machine described in the '710 patent includes a frame with a base configured to rest on a ground surface and a support stand arising from the base. A hand rail extends from the top of the support stand to each side of the base, and a display board is mounted on top of the hand rail above the support stand. The machine also includes two foot rails, spaced apart, that are each connected to the support stand by a stroke rail and a rotatable crank arm.

During operation, an exerciser places one foot on each foot rail and moves his or her feet back and forth so that the front end of each foot rail moves in a substantially elliptical path. When the exerciser's feet move in an elliptical pattern, it simulates a running motion.

---

1. A description of the invention is set forth more fully in the Court's Order of December 22, 2010 [Docket No. 144]. The '710 patent is attached as Exhibit 1 to the Declaration of Matthew L. Cutler [Docket No. 158].

Appendix E

To enable their elliptical machine to occupy a smaller space, the inventors placed the foot rail linking mechanism in front of the device rather than in the back of the device. This linking mechanism, sometimes called a "linkage system," connects the foot rails to the frame so as to allow for elliptical motion. A stroke rail (*see* highlighted portion of Figures 1 and 2, below) is attached to the forward end of a foot rail and connected to the frame via (1) a pin mounted within a C-shaped channel (the "C-channel") (*see* Figure 2, no. 84) on the support stand; and (2) a collar (*see* Figure 1, no. 106) encircling a pin (*id.*, no. 104) projecting from a rotatable crank arm (*id.*, no. 98), connected to an axle (*id.*, no. 92) extending through the support stand.

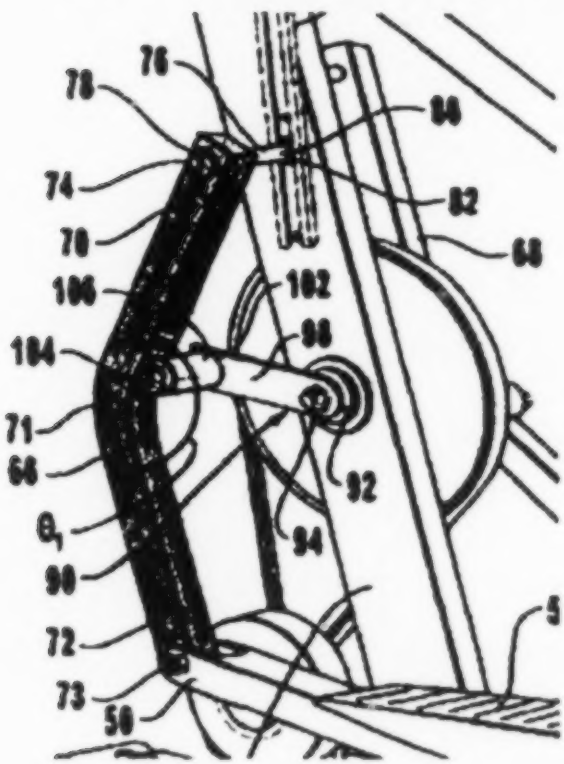

Figure 1

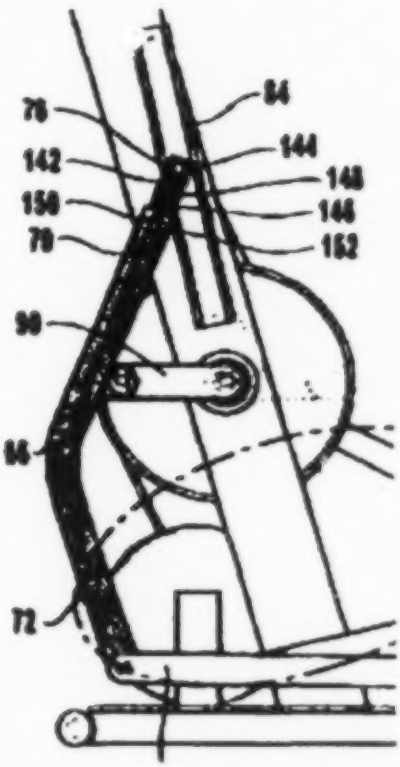

Figure 2

Appendix E

The patent describes two types of stroke rails. The first type, depicted in Figure 1, is a unitary stroke rail that does not vary in length. The second type of stroke rail can increase or decrease in length via manual adjustment (Figure 2) or motorized adjustment (not pictured).

At issue in this litigation are patent claims 1-5, 7, and 9-11, all directed to the elliptical machine's linkage system. Those claims were construed in this Court's Order of December 22, 2010 [Docket No. 144] ("Claim Construction Order").

III. DISCUSSION

A. The Law of Patent Infringement

The determination of infringement is a two-step process. First, the claims are construed; second, the construed claims are compared to the allegedly infringing product. *See IMS Tech., Inc. v. Haas Automation, Inc.*, 206 F.3d 1422, 1429 (Fed. Cir. 2000). The first step, a question of law, *id.*, has already been performed. The second step, infringement, is a question of fact; however, where no reasonable jury could find infringment, summary judgment is appropriate. *Id.*

"To establish infringement, every limitation set forth in a patent claim must be found in an accused product or process exactly or by a substantial equivalent." *Laitram Corp. v. Rexnord, Inc.*, 939 F.2d 1533, 1535 (Fed. Cir. 1991). Where the claim limitations appear exactly, the accused product literally infringes. Where features

substantially equivalent to the claim limitations appear in the accused product, the accused product infringes under the doctrine of equivalents. Icon claims both types of infringement apply here.

1. Literal infringement

Literal infringement requires that every limitation set forth in a patent claim be found in the accused device. *Elkay Mfg. Co. v. Ebco Mfg. Co.*, 192 F.3d 973, 980 (Fed. Cir. 1999). If any limitation is missing, there is no literal infringement. *Id.*

When a claim is presented in means-plus-function form, as several of the '710 patent claims are, the analysis is slightly different. A means-plus-function claim "recite[s] a specified function to be performed rather than the structure, material or acts for performing that function." *IMS Tech.*, 206 F.3d at 1429-30. "Such limitations are construed to cover the corresponding structure, material, or acts described in the specification and equivalents thereof." *Id.*, *citing* 35 U.S.C. § 112, ¶ 6 (internal quotation omitted).

For a means-plus-function claim, the analysis for literal infringement "requires that the relevant structure in the accused device perform the identical function recited in the claim and be identical or equivalent to the corresponding structure in the specification." *Odetics, Inc. v. Storage Tech. Corp.*, 185 F.3d 1259, 1267 (Fed. Cir. 1999). This is a narrower version of what is often referred to as the "tripartite test," or the "function, way, or result" test,

developed in the context of the doctrine of equivalents. *See id.* In the context of a means-plus-function claim, the word "equivalent" indicates the relevant structure must perform the identical function in substantially the same way to achieve substantially the same result. *Id.*

To determine if there has been literal infringement of a means-plus-function claim, the Court first considers whether the identical function is performed. *IMS Tech.*, 206 F.3d at 1430. If so, the Court determines "whether the accused device uses the same structure, materials or acts found in the specification, or their equivalents." *Id.* The Court must analyze the differences between the structure claimed in the patent, and the proposed equivalent. *See Odetics*, 185 F.3d at 1268. "[T]he claim limitation is the overall structure corresponding to the claimed function." *Id.* As "structures with different numbers of parts may still be equivalent under § 112, ¶ 6[,]" *id.*, it is neither necessary nor appropriate to deconstruct the corresponding structure into its component parts, and look for an exact match.

Decisions of the Federal Circuit establish when structures are, and are not, substantially equivalent. For example, a patent on a circular saw for concrete claimed the function of "supporting the surface of the concrete" while it was being sawed. *Chiuminatta Concrete Concepts, Inc. v. Cardinal Indus., Inc.*, 145 F.3d 1303, 1306 (Fed. Cir. 1998). The court found the patent claimed a "hard and predominantly flat" structure called a "skid plate" that skidded across the concrete surface, while the accused structure was a "soft, compressible, and round" set of

rubber wheels that rolled over the surface. *Id.* at 1309. Because one skidded and the other rolled, and because the two structures supported the concrete surface in substantially different ways, they were not equivalent. *Id.*

By contrast, equivalence was found in *Odetics*, a case dealing with automated videocassette library storage devices. There, the claimed function was to rotate a bin when force was applied. *Odetics*, 185 F.3d at 1264. The corresponding structure was a gear with teeth; the accused structure was a set of pins protruding from the bottom of the bin. *Id.* at 1265, 1269-70. In both instances, force applied to the structure caused the bin to rotate; as a result, the structures were equivalent, which supported a finding of literal infringement. *Id.* at 1270.

When considering equivalence, the context of the invention controls, because "two structures that are equivalent in one environment may not be equivalent in another" - for example, "if performing functions other than the claimed function." *IMS Tech.*, 206 F.3d at 1436. Thus the context of the claimed invention informs the analysis of how substantial the differences are. Where "the disclosed physical structure is of little or no importance to the claimed invention, there may be a broader range of equivalent structures than if the physical characteristics of the structure are critical in performing the claimed function in the context of the claimed invention." *Id.* So, for example, where a patent for controlling a machine tool claimed an "interface means" for transferring and recording data onto "an external medium," but did not specify a format or mechanism

for recording or retrieving data, a reasonable factfinder might find the differences between a cassette tape and a floppy disk to be insubstantial. *Id.* at 1430, 1437. "That two structures may perform unrelated- and, more to the point, unclaimed- functions differently or not at all is simply not pertinent to the measure of § 112 ¶ 6 equivalents." *Odetics*, 185 F.3d at 1271.

Another test for equivalence is the "known interchangeability" test. The known interchangeability test "looks to the knowledge of a skilled artisan to see whether that artisan would contemplate the interchange as a design choice." *Interactive Pictures Corp. v. Infinite Pictures, Inc.*, 274 F.3d 1371, 1383 (Fed. Cir. 2001). Expert testimony that alternatives are known to be interchangeable may support a finding of equivalence. *Id.* at 1382; *see also Caterpillar, Inc. v. Deere & Co.*, 224 F.3d 1374, 1380 (Fed. Cir. 2000) (question of fact on equivalence where evidence showed accused mechanism "was a known alternative" structure that "had, in fact, been substituted" by patentee for the structure disclosed in the patent); *IMS Tech.*, 206 F.3d at 1437 (same, where evidence showed floppy disk drive and tape cassette were known to be equivalent for data transferring and recording functions); *Al-Site Corp. v. VSI Intern., Inc.*, 174 F.3d 1308, 1316 (Fed. Cir. 1999) (same, where expert testified that glue and rivet were interchangeable structures when used to close a loop on an eyeglass display).

2. Doctrine of Equivalents Infringement

Even without literal infringment, it is possible for a device to infringe if the accused device includes the

substantial equivalent of every claim limitation. *See Sage Prods., Inc. v. Devon Indus., Inc.*, 126 F.3d 1420, 1423 (Fed. Cir. 1997). The key question is whether the differences are "insubstantial." *Id.* "The doctrine of equivalents prevents an accused infringer from avoiding infringement by changing only minor or insubstantial details of a claimed invention while retaining their essential functionality." *Id.* at 1424. As the Federal Circuit has observed,

> The doctrine of equivalents is necessary because one cannot predict the future. Due to technological advances, a variant of an invention may be developed after the patent is granted, and that variant may constitute so insubstantial a change from what is claimed in the patent that it should be held to be an infringement. Such a variant, based on after-developed technology, could not have been disclosed in the patent.

Chiuminatta, 145 F.3d at 1310.

The equivalence analysis largely mirrors the analysis for literal infringement of a means-plus-function claim. The test for equivalent structure is the same: whether the structure performs a function in the same way with the same result. *See id.* at 1311 (holding lack of equivalent structure under § 112, ¶ 6 mandates same finding under doctrine of equivalents). But where the means-plus-function analysis requires identical functions, the doctrine of equivalents requires only that the functions be substantially similar. *Interactive Pictures*, 274 F.3d at 1382. The known interchangeability test also applies in the context of the doctrine of equivalents. *See id.*; *see*

also Warner-Jenkinson Co. v. Hilton Davis Chem. Co., 520 U.S. 17, 36, 117 S. Ct. 1040, 137 L. Ed. 2d 146 (1997).

What constitutes substantially equivalent function again is illustrated by reviewing the opinions of the Federal Circuit. In a case involving digital image processors, a jury considered whether an image processing system infringed a claimed "image transform processor means." *Interactive Pictures*, 274 F.3d at 1382. The two image processing systems transformed different types of digital input signals into the same type of image. As the Federal Circuit observed, "A difference of inputs to a signal processing element resulting in the same output necessarily implies a difference in function performed by the element." *Id.* However, the jury concluded that the difference in function was insubstantial, and the Federal Circuit found no basis to reverse that finding as a matter of law. *Id.*

In another case, the court considered an electronic circuit switch designed to allow a television to receive signals from both a VCR and a television antenna. The patent claimed a "means . . . for establishing a second signal path [from the TV to the antenna] . . . said second signal path being disrupted" when the VCR was turned on. *GE v. Nintendo Co.*, 179 F.3d 1350, 1354 (Fed. Cir. 1999). The accused switch contained transistors which established "an alternative path of lower resistance allowing the antenna signal to flow to ground rather than to the television," effectively bypassing, but not disrupting, the signal path to the television. *Id.* at 1355. The functions were not identical, and, because one altered

the signal path while the other did not, they also were not equivalent. *Id.* at 1356. *See also Kahn v. GMC,* 135 F.3d 1472, 1478 (Fed. Cir. 1998) (in AM stereo receivers, function of reducing distortion in first input signal is not substantially equivalent to function of removing second input signal).

The application of the doctrine of equivalents is not without legal limitations, which raise questions of law for the court. *See Warner-Jenkinson,* 520 U.S. at 39 n.8. One arises when the patentee argues for an equivalent which, if accepted, would vitiate an element of the original claim. Known as the "all elements rule," the "all limitations rule," or the "doctrine of vitiation," the doctrine holds that "each element contained in a patent claim is deemed material to defining the scope of the patented invention," and that the doctrine of equivalents "is not allowed such broad play as to effectively eliminate [an] element in its entirety." *DePuy Spine, Inc. v. Medtronic Sofamor Danek, Inc.,* 469 F.3d 1005, 1016-17 (Fed. Cir. 2006) (*citing Warner-Jenkinson,* 520 U.S. at 29-30). So, even if two functions or structures may in fact be equivalent, they cannot be found equivalent as a matter of law if doing so would effectively read a claim limitation out of a claim or render it meaningless. *Tronzo v. Biomet, Inc.,* 156 F.3d 1154, 1160 (Fed. Cir. 1998). Thus where a patentee proposes a theory of equivalence which "effectively eliminate[s] a limitation in its entirety," such a theory is legally insufficient to prove infringement as a matter of law. *DePuy Spine,* 469 F.3d at 1017.

For example, where a patent for an artificial hip socket specifically claimed a particular conical shape, and

differentiated other shapes in the prior art as inferior, the patentee could not later claim infringement on the theory that other shapes were equivalent - even when that theory was supported by expert testimony. *Tronzo*, 156 F.3d at 1159-60. In another case involving folding bus seats, an accused seat that was "rotatably mounted" to its base was not equivalent to a patented seat that was "slidably mounted" to its base. *Freedman Seating Co. v. Am. Seating Co.*, 420 F.3d 1350, 1361 (Fed. Cir. 2005). Because sliding is "not a subtle difference in degree, but rather . . . a difference in kind" from rotation, no reasonable jury could find the two equivalent without vitiating the "slidably mounted" limitation. *See id.* at 1362 (internal quotation omitted). Similarly, no reasonable jury could find a rod extending horizontally to be equivalent to a rod extending "vertically up"; doing so would read the limitation "vertically up" out of the patent. *See Nautilus Group, Inc. v. Icon Health & Fitness, Inc.*, Civ. No. C022420RSM, 2005 WL 1902498, *6 (W.D. Wash. May 25, 2005) (unpublished), *aff'd without opinion*, 191 Fed. Appx. 960 (Fed. Cir. Aug. 17, 2006). If a factfinder must ignore a claim limitation to find equivalence, then as a matter of law, the differences are not insubstantial.

The reach of the doctrine of equivalents is also limited by the prior art. *See Interactive Pictures*, 274 F.3d at 1380. Just as a patentee cannot assert equivalents that would read a limitation out of the patent, a patentee also cannot assert equivalents that would encompass, or "ensnare," the prior art. *See Depuy Spine, Inc. v. Medtronic Sofamor Danek, Inc.*, 567 F.3d 1314, 1322 (Fed. Cir. 2009) (holding "ensnarement" defense to infringement

is a question of law). This is because "a patentee should not be able to obtain, under the doctrine of equivalents, coverage which he could not lawfully have obtained from the PTO by literal claims." *Wilson Sporting Goods Co. v. David Geoffrey & Assoc.*, 904 F.2d 677, 684 (Fed. Cir. 1990), *overruled in part on other grounds by Cardinal Chem. Co. v. Morton Intern., Inc.*, 508 U.S. 83, 92 n.12, 113 S. Ct. 1967, 124 L. Ed. 2d 1 (1993). In a crowded field of prior art, the scope of equivalents may be limited. *See Abbott Labs. v. Dey, L.P.*, 287 F.3d 1097, 1105 (Fed. Cir. 2002). "[W]hen a device that incorporates the purported equivalent is in fact the subject of a separate patent, a finding of equivalency, while perhaps not necessarily legally foreclosed, is at least considerably more difficult to make out." *Festo Corp. v. Shoketsu Kinzoku Kogyo Kabushiki Co.*, 493 F.3d 1368, 1379-80 (Fed. Cir. 2007). The accused infringer bears the burden of identifying prior art which would be encompassed by the asserted range of equivalents, at which point the patentee must show that its proposed equivalent does not encompass the prior art. *Streamfeeder, LLC v. Sure-Feed Sys., Inc.*, 175 F.3d 974, 983 (Fed. Cir. 1999). The patentee must propose "a hypothetical claim that is sufficiently broad in scope to *literally* encompass the accused product or process." *Ultra-Tex Surfaces, Inc. v. Hill Bros. Chem. Co.*, 204 F.3d 1360, 1364 (Fed. Cir. 2000).

> If that [hypothetical] claim would have been allowed by the PTO over the prior art, then the prior art does not bar the application of the doctrine of equivalents. Conversely, if that claim would not have been allowed, the

> prior art bars application of the doctrine and infringement by equivalence may not be found.

Id. at 1364-65 (internal citations omitted).

With these principles in mind, the Court turns to the motion to strike and the infringement analysis.

B. Motion to Strike Expert Testimony

Octane moves to strike the portions of the opinion of Icon's expert, Dr. Jahan Rasty, that pertain to infringement by equivalents. For the following reasons, the motion is denied.

Federal Rule of Evidence 702 provides:

> If scientific, technical, or other specialized knowledge will assist the trier of fact to understand the evidence or to determine a fact in issue, a witness qualified as an expert by knowledge, skill, experience, training, or education, may testify thereto in the form of an opinion or otherwise, if (1) the testimony is based upon sufficient facts or data; (2) the testimony is the product of reliable principles and methods, and (3) the witness has applied the principles and methods reliably to the facts of the case.

Fed. R. Evid. 702. To be admissible, therefore, proposed expert testimony based on scientific, technical or other

specialized knowledge must meet three prerequisites: it must be relevant, reliable, and offered by a qualified witness. *See Lauzon v. Senco Prods., Inc.*, 270 F.3d 681, 686 (8th Cir. 2001).

Dr. Rasty has a doctoral degree in mechanical engineering and a master's degree in business administration. He has been a tenured professor of mechanical engineering for over 22 years, currently heads a university research laboratory, and has published numerous peer-reviewed studies based on the results of his research. Rasty Decl. [Docket No. 173] Ex. 1 ("Rasty Expert Report") at 2; *see also* Hall Decl. [Docket No. 170] Ex. A. Octane argues that Dr. Rasty's lack of experience designing and manufacturing elliptical machines makes him "unable to competently testify" as to whether Octane's machines have structures equivalent to those disclosed in the '710 patent. Octane *Daubert* Mem. [Docket No. 152] at 6. However, an expert may be qualified based on "knowledge, skill, experience, training, or education." Fed. R. Evid. 702. There is no dispute Dr. Rasty has all of these credentials in areas related to mechanical engineering. "Gaps in an expert witness's qualifications or knowledge generally go to the weight of the witness's testimony, not its admissibility." *Robinson v. GEICO Gen. Ins. Co.*, 447 F.3d 1096, 1100 (8th Cir. 2006). There is no basis to exclude Dr. Rasty's testimony on the grounds that he is not qualified.

The next question is whether Dr. Rasty's testimony is relevant. Relevance means simply that the testimony will "assist the jury in determining *any* fact at issue in

the case." *Smith v. Ford Motor Co.*, 215 F.3d 713, 721 (7th Cir. 2000). Octane contests portions of Dr. Rasty's opinion directed to equivalent structure. In the context of proving equivalence, the Federal Circuit has held that an expert must provide "particularized testimony" on a "limitation-by-limitation basis" as to "the insubstantiality of the differences" in function, way, and result. *Texas Instruments Inc. v. Cypress Semiconductor Corp.*, 90 F.3d 1558, 1567 (Fed. Cir. 1996). Generalized or conclusory testimony will not suffice. *Id.*

Equivalence is a question of fact at issue in the case, and accordingly Dr. Rasty's testimony may be relevant if it is sufficiently particularized. Octane argues it is not. However, Dr. Rasty's report analyzes each of the disputed claims on a limitation-by-limitation basis, addressing the differences in function, way and result, as well as the alternative test of known interchangeability. *See, e.g.*, Rasty Expert Report at 8 (addressing claim 1(e)). The report reflects Dr. Rasty was aware of the applicable legal tests and employed the proper claim constructions (with the exception of "linear reciprocating displacement," which will be excluded as discussed below). *Id.* at 4. The Court finds no basis to exclude Dr. Rasty's equivalence testimony on the grounds of relevance.

The final inquiry is whether Dr. Rasty's testimony is reliable. To be admissible, Dr. Rasty's testimony must be "based upon sufficient facts or data" and "the product of reliable principles and methods," which have been applied "reliably" to the facts of the case. *See* Fed. R. Evid. 702. When considering reliability, the focus is on "principles and

methodology, not on the conclusions that they generate." *Daubert v. Merrell Dow Pharms.*, 509 U.S. 579, 595, 113 S. Ct. 2786, 125 L. Ed. 2d 469 (1993). "The soundness of the factual underpinnings of the expert's analysis and the correctness of the expert's conclusions based on that analysis are factual matters to be determined by the trier of fact, or, where appropriate, on summary judgment." *Smith*, 215 F.3d at 718.

Trial courts have discretion not only to determine whether an expert's testimony is reliable, but also "in deciding *how* to test an expert's reliability." *Kumho Tire Co. v. Carmichael*, 526 U.S. 137, 152, 119 S. Ct. 1167, 143 L. Ed. 2d 238 (1999). Toward that end, the Supreme Court has proposed four non-exclusive factors that may be considered, including (1) whether the expert's method can be, or has been, tested; (2) whether the method has been subjected to peer review and publication; (3) the method's known or potential rate of error; and (4) whether the method is generally accepted. *See Lauzon*, 270 F.3d at 686-87, *citing Daubert*, 509 U.S. at 593-94.

Here, Octane does not challenge Dr. Rasty's testimony on any of these grounds. Rather, it argues that Dr. Rasty neglected to give sufficient weight to what it considers to be "the important factors to consider in designing a marketable elliptical exercise machine," including "manufacturability, cost, smoothness, noise, and size of the machine." Octane *Daubert* Mem. at 6. Octane asked Dr. Rasty whether he had considered the "advantages" of Octane's design in these areas. Cutler Summary Judgment Decl. [Docket No. 158] Ex. 16 ("Rasty Dep.") at

137. Dr. Rasty replied that he "didn't really see differences that were worth mentioning." *Id.* at 138.

Octane also observes that Dr. Rasty's opinions contradict those of an Icon fact witness, William Dalebout, who testified about design and manufacturing issues with the invention described in the '710 patent. Octane Daubert Mem. at 7; Cutler *Daubert* Decl. [Docket No. 153] Ex. 5 at 36-37. Discrepancies in witnesses' testimony, however, would go to credibility, not admissibility. *See Lauzon*, 270 F.3d at 695 n.9.

Octane has not shown that Dr. Rasty's testimony falls "outside the range where experts might reasonably differ, and where the jury must decide among the conflicting views of different experts." *Kumho Tire*, 526 U.S. at 153. To the extent Dr. Rasty's testimony may include inaccuracies, discrepancies or conclusions lacking support, these would be proper subjects for cross-examination. *See Daubert*, 509 U.S. at 596. Accordingly, Octane's motion to strike the portions of Dr. Rasty's testimony on equivalence is denied.

C. Motion for Summary Judgment of Non-infringement

Federal Rule of Civil Procedure 56(a) provides that summary judgment shall issue "if the movant shows that there is no genuine dispute as to any material fact and that the movant is entitled to judgment as a matter of law." Fed. R. Civ. P. 56(a); *see also Matsushita Elec. Indus. Co. v. Zenith Radio Corp.*, 475 U.S. 574, 587, 106 S. Ct.

1348, 89 L. Ed. 2d 538 (1986) (*citing* Fed. R. Civ. P. 56(c));[2] *Anderson v. Liberty Lobby, Inc.*, 477 U.S. 242, 252, 106 S. Ct. 2505, 91 L. Ed. 2d 202 (1986)(same); *Celotex Corp. v. Catrett*, 477 U.S. 317, 323, 106 S. Ct. 2548, 91 L. Ed. 2d 265 (1986)(same). On a motion for summary judgment, the Court views the evidence in the light most favorable to the nonmoving party and draws all justifiable inferences in its favor. *Ludwig v. Anderson*, 54 F.3d 465, 470 (8th Cir. 1995). The nonmoving party may not "rest on mere allegations or denials, but must demonstrate on the record the existence of specific facts which create a genuine issue for trial." *Krenik v. County of Le Sueur*, 47 F.3d 953, 957 (8th Cir. 1995) (internal quotation omitted).

Icon argues the linkage system in Octane's Q45 and Q47 machines infringes claims 1-5, 7, and 9-11 of the '710 patent. Of these, the only independent claim is Claim 1. If Octane can show Claim 1 is not infringed, then none of the claims which depend on Claim 1 are infringed. *See Streamfeeder*, 175 F.3d at 984. Accordingly, both sides focus their attention on three disputed elements of Claim 1: 1(c), 1(d) and 1(e). Because the analysis of claim 1(d) is dispositive, it will be addressed first.

1. **Claim 1(d)**

The patent claims a **"means for connecting each stroke rail to the frame such that linear reciprocating**

---

2. Federal Rule of Civil Procedure 56 was amended effective December 1, 2010; the summary judgment standard was previously located in Rule 56(c).

displacement of the first end of each stroke rail results in displacement of the second end of each stroke rail in a substantially elliptical path." '710 patent, claim 1(d).[3] The function is "connecting each stroke rail to the frame such that linear reciprocating displacement of the first end of each stroke rail results in displacement of the second end of each stroke rail in a substantially elliptical path." The Court declined to construe the terms of this claim, including "linear reciprocating displacement," and so those words take their "ordinary and customary meaning as understood by a person of ordinary skill in the art at the time of the invention." *Wavetronix v. EIS Elec. Integrated Sys.*, 573 F.3d 1343, 1355 (Fed. Cir. 2009).

Icon proposed a construction of "linear reciprocating displacement" which did not require "movement along a linear path." This construction was rejected. Claim Construction Order at 8. Nonetheless, Icon argues that the first end of the stroke rail undergoes linear reciprocating displacement, relying on a portion of Dr. Rasty's report which uses the rejected construction. *See* Icon Mem. Opp.

---

3. The Court declined to construe the function associated with claim 1(d), but described it as "to connect the stroke rail to the frame in such a way as to cause the first end of the stroke rail to undergo linear reciprocating displacement (which then causes the second end of the stroke rail to move in an elliptical path)." Claim Construction Order at 10. Icon treats this description as a construction, and urges the Court to modify it so that there is no need for the connecting means to "cause" one end of the stroke rail to undergo linear reciprocating displacement. Icon Mem. Opp. S.J. [Docket No. 171] at 20. The description is not a construction. Because the words in this claim take their ordinary meaning, construction is not necessary.

S.J. [Docket No. 171] at 21, *citing* Rasty Expert Report at 7. Because it is based on an erroneous claim construction, Dr. Rasty's opinion on this point is not admissible. *See Texas Instruments*, 90 F.3d at 1565 (expert testimony based on incorrect claim construction cannot support finding of infringement under proper construction). His opinion therefore cannot create a question of fact on whether the first end of the proposed stroke rail in Octane's machines undergoes linear reciprocating displacement.

Given the exclusion of Dr. Rasty's opinion on this point, there is no evidence that any part of Octane's machines undergoes linear reciprocating displacement. Indeed, when considering the issue using the proper construction, Dr. Rasty acknowledges that "the first end of the stroke rails . . . reciprocate along a slightly arcuate path rather than along a straight path." Rasty Expert Report at 12. Without linear reciprocating displacement, there can be no literal infringement under § 112, ¶ 6, because the functions are not identical. The difference between movement in a straight line and movement in an arc is a "difference in kind," not merely a "difference in degree." *See Freedman Seating*, 420 F.3d at 1360. Icon's linkage system translates linear reciprocating displacement into elliptical motion. Octane's linkage system translates arcuate displacement into elliptical motion. Two different inputs yield the same output, which strongly suggests that a different function is being performed. *Compare Interactive Pictures*, 274 F.3d at 1382. On these facts, no reasonable jury could find the functions to be identical. There is no literal infringement of claim 1(d).

Appendix E

The Court next considers whether the functions are substantially equivalent so as to allow infringement under the doctrine of equivalents. Dr. Rasty suggests that in this context, movement in a slight arc is equivalent to movement in a straight line, because "substituting straight-path reciprocation with reciprocation along a slight arc has no meaningful effect on the elliptical path traveled by the second end of the stroke rail. . . . Both provide lateral constraint of the motion of the first end of the stroke rail and convert circular motion derived from the axle to elliptical motion at the second end." Rasty Expert Report at 12.

The Court does not agree. To find the functions equivalent, it is necessary to read the word "linear" out of claim 1(d), a result prohibited by the doctrine of vitiation. Had Icon sought to claim different types of reciprocating displacement, it might simply have omitted the word "linear"; it chose not to do so, and is bound by that choice.

In addition, the requirement of linear reciprocating displacement is critical to the context of this invention. The prior art field is crowded. *See* '710 patent at 1 (listing 27 prior art references). In a Notice of Allowability, the U.S. Patent and Trademark Office specifically identified linear reciprocating displacement as a reason why the '710 patent was allowable over the prior art. *See* Cutler S.J. Decl. [Docket No. 158] Ex. 13. Dr. Rasty has also acknowledged that linear reciprocating displacement is one reason why the linkage system disclosed in the '710 patent was patentable over the prior art. Rasty Dep. at 139.

Appendix E

Movement in an arc is not a recent development in mechanics; indeed, Octane has identified a patent prior to the '710 patent which discloses an elliptical linkage system that translates arcuate motion into elliptical motion. *See* U.S. Patent No. 5,707,321, Cutler S.J. Decl. [Docket No. 158] Ex. 18 (the "'321 patent"). This is not a case in which the doctrine of equivalents is necessary to protect a patentee from infringement via a technology unknown at the time of the patent application. For all these reasons, Icon may not rely on the doctrine of equivalents to prove that, for purposes of an elliptical linkage system, movement in an arc is substantially equivalent to movement in a straight line.

Because the functions are neither identical nor substantially similar, claim 1(d) is not infringed as a matter of law. The Court will nevertheless proceed to consider whether Octane's machines have equivalent structure.

In a means-plus-function claim, the "corresponding structure must include all structure that actually performs the recited function." *Cardiac Pacemakers, Inc. v. St. Jude Medical, Inc.*, 296 F.3d 1106, 1119 (Fed. Cir. 2002). The claim construction order identifies this structure as (1) an axle mounted to both the frame and a pair of crank arms; (2) a pin projecting from each crank arm; (3) a collar encircling each pin that is attached to a stroke rail; (4) the C-channel and corresponding flared-head pin; and (5) spot welds, nuts and washers used to attach these structures together. Claim Construction Order at 11-14.

Appendix E

Dr. Rasty acknowledges that Octane's machines do not have identical structure, yet suggests they are equivalent because they restrain unwanted lateral movement in substantially the same way (through the use of rigid metal structures) with substantially the same result (elliptical movement at the second end of the stroke rail). Rasty Expert Report at 13. Focusing specifically on the "way" element, Dr. Rasty proposes that the C-channel and flared-head pin structure of claim 1(d) is equivalent to a part of Octane's machines called a rocker link or stability link, because "trapping a moving object in a track and tethering a moving object to a ridged pivoting are known to be interchangeable ways to limit the object from moving in an undesirable direction while, at the same time, allowing movement of the object in a desired direction." *Id.* at 13-14.

The Court finds the structures are not equivalent as a matter of law. A structure which may be equivalent in one context may not be equivalent in another, *see IMS Tech.*, 206 F.3d at 1436, and the structure's performance of unclaimed functions is not pertinent to the analysis. *See Odetics*, 185 F.3d at 1271. While the C-channel and the rocker link may be equivalent for the function of restraining unwanted lateral movement, this is not the function claimed in the patent. Instead, the claimed function is connecting the stroke rail to the frame so that linear reciprocating displacement of the first end of the stroke rail results in elliptical motion at the second end.

In this context, the structures do not perform the function in the same way. By sliding back and forth

within the C-channel, the flared-head pin allows the first end of the stroke rail to undergo linear reciprocating displacement which is converted to elliptical motion at the second end. Because the C-channel and flared-head pin are critical to the function of allowing the first end of the stroke rail to undergo linear reciprocating displacement, the range of equivalents is correspondingly narrow. As already noted, no part of Octane's machines undergoes linear reciprocating displacement. Instead, the rocker link allows the actuator casting to pivot in an arc. No reasonable jury could find the structures equivalent as a matter of law.

Claim 1(d) of the patent is not infringed as a matter of law. For this reason, Octane is entitled to summary judgment of non-infringement. However, the Court will proceed to consider the remaining disputed claim elements.

2. Claim 1(c)

Claim 1(c) identifies **"a pair of stroke rails each having a first end and an opposing second end, the second end of each stroke rail being hingedly attached to the first end of a corresponding foot rail."** '710 patent, claim 1(c). The term "stroke rail" is not defined in the patent, and has no meaning for a person of ordinary skill in the art. The Court has construed it to mean "a linear or curved rail, which may be made to vary in length, extending from a foot rail to a frame on an elliptical machine." Claim Construction Order at 8.

Appendix E

The parties dispute whether Octane's machines have a "stroke rail."[4] Octane argues that "no part of Octane's linkage extends from a foot rail to the frame." Octane Mem. S.J. [Docket No. 157] at 22. Icon responds that two parts of Octane's linkage system, the actuator casting and the intergrated screw motor, are a "stroke rail" which "extends from a foot rail to a frame" via the rocker link. Icon Mem. Opp. S.J. [Docket No. 171] at 11-12. Octane replies that the rocker link is "part of Octane's multi-part linkage system; it is not a connecting part" and ought not to count as part of a stroke rail. Octane S.J. Reply [Docket No. 183] at 4.

A stroke rail may not consist of an unlimited number of parts; a proposed construction to that effect was specifically rejected as impermissibly broadening the scope of the patent. Claim Construction Order at 8. Yet a stroke rail "may be made to vary in length," which contemplates a multi-part structure. A reasonable jury could find that additional elements used to vary the length of a stroke rail are part of the stroke rail. However, other

---

4. Icon argues Octane conceded its Q47 linkage had a stroke rail. Icon Mem. Opp. at 6. Octane's initial claim construction chart, dated August 26, 2009, states that as to claim 1(c), "Octane admits that the Q47 Machine contains this element." Veverka Decl. [Docket No. 172], Ex. 1 at 2. On June 1, 2010, Octane filed a supplemental claim construction chart providing as to claim 1(c), "Octane's Q47 Machine does not contain this element." *Id.*, Ex. 2 at 2. Octane offers no explanation for the discrepancy. Because since June 2010 Octane appears to have consistently argued the absence of a stroke rail, and because Icon did not argue the alleged concession at claim construction, the Court finds that the concession was withdrawn by Octane well before this motion was filed.

intervening parts unrelated to varying the length of the stroke rail cannot reasonably be considered part of the stroke rail.

So viewed, the elements which Icon characterizes as a stroke rail cannot literally infringe claim 1(c). Even if Octane's actuator casting and integrated screw motor could together be considered a "linear or curved rail," and even if that rail "may be made to vary in length," no reasonable jury could find the stroke rail "extends from a foot rail to a frame" because of the intervening rocker link. If the rocker link varied the length of the stroke rail, arguably it might be considered part of the stroke rail; but it does not. It is a separate, independently moving, intervening element of the linkage system interposed between the frame and the proposed stroke rail, and its presence prevents the stroke rail from extending to the frame. Accordingly no reasonable jury could find literal infringement of claim 1(c).

The next question is whether claim 1(c) is infringed under the doctrine of equivalents. Octane argues the "basic structure" of its linkage system was disclosed in the '321 patent, and as prior art lies beyond the reach of the doctrine of equivalents as a matter of law. Octane Mem. S.J. at 27-31; *see* '321 patent. Octane has the burden of proffering evidence of prior art that is encompassed by Icon's proposed range of equivalents. *See Streamfeeder*, 175 F.3d at 983. Octane has met its burden.

Icon, however, has failed to propose a hypothetical claim that encompasses Octane's machines. As the patentee with the ultimate burden to show infringement

by equivalents, it is Icon's burden to propose a hypothetical claim for analysis in response to Octane's motion for summary judgment of non-infringement. *See id.* at 982; *see also Ultra-Tex Surfaces*, 204 F.3d at 1364. Instead, Icon argues the '321 patent fails to read on the '710 patent, and specifically is missing the equivalent of claim 1(e). Icon Mem. Opp. S.J. at 27-28. This analysis establishes that the '321 patent does not anticipate the literal '710 patent claims - a point not in dispute. Icon's analysis does not address whether the '321 patent anticipates Icon's proposed *equivalent* to those claims.

There is no literal infringement as to claim 1(c). Because Icon has not proposed a hypothetical claim to support its argument that its proposed range of equivalents is not ensnared by the '321 patent, the Court finds claim 1(c) is not infringed under the doctrine of equivalents.

3. Claim 1(e)

The Court has previously held that the function set forth in claim 1(e), "**selectively varying the size of the substantially elliptical path that the second end of each stroke rail travels,**" needs no construction. Claim Construction Order at 14. For the motorized embodiment, which is the only one arguably infringed, the corresponding structure is "[a]n electric motor driving a gear that engages teeth on an elongated engagement bar to move an adjustment arm. The electric motor is mounted to the stroke rail by a bracket, and the adjustment arm is connected to the elongated engagement bar by a rod." Claim Construction Order at 17-18.

Appendix E

For purposes of this Motion Octane does not dispute the functions are identical: Octane's machines are able to selectively vary the substantially elliptical path traveled by the second end of the proposed stroke rail. However, Octane argues its machines have no structure equivalent to the adjustment arm and connecting rod outlined in claim 1(e). Octane notes the "tube-within-a-tube" structure contemplated by the '710 patent presents many disadvantages as compared to Octane's integrated screw mechanism. Octane Mem. S.J. at 15.

Dr. Rasty proposes that the electric motor and integrated screw used in Octane's machines vary the elliptical path in substantially the same way to achieve substantially the same result. Specifically, "[b]oth mechanisms transform the rotary motion of an electric motor to transverse motion. The gear of the rack and pinion traverses the teeth of the associated bar in a very similar way that the nut of a power screw traverses the threads of the associated screw." Rasty Expert Report at 14. According to Dr. Rasty, both mechanisms "increase/decrease the effective distance between two pivot points which in turn varies the size of the substantially elliptical path." *Id.* Furthermore, "[i]n mechanics, power screws and rack and pinion devices are known to be interchangeable systems in many applications." *Id.*

To defeat the argument on equivalence, Octane responds with functions not claimed in the patent - for example, creating a smaller operating envelope at the front of the machine, as well as reducing manufacturing and mechanical challenges associated with the structure in the patent. Octane highlights the differences between

the '710 design and its machines in performing these functions. *See* Octane Mem. S.J. at 35-37.

As already noted, what is equivalent in one context may not be equivalent in another, and differences in performing unclaimed functions are not relevant to an equivalence analysis. Claim 1(e) is drawn more broadly than claim 1(d), and does not by its terms require a tube-within-a-tube structure. Neither does it appear that the physical characteristics of this structure are critical to the claimed function of selectively varying the elliptical path. There is no evidence that the PTO considered the tube-within-a-tube structure to be a reason to allow the '710 patent over the prior art. Dr. Rasty has testified that a rack-and-pinion structure is mechanically equivalent to a motorized screw for the purposes of selectively varying the elliptical path. Octane's expert, Steven Lenz, does not appear to dispute the point, testifying instead that a motorized screw is superior technology which has largely replaced rack-and-pinion structure on modern exercise machines. Veverka Decl. [Docket No. 172] Ex. 7 at 22-27; Ex. 8 at 153-56.

There is an issue of fact as to whether Octane's integrated screw motor is equivalent to the structures corresponding to claim 1(e). However, because claim 1(d) is not infringed as a matter of law, Octane is entitled to summary judgment of non-infringement.

Appendix E

V. CONCLUSION

Based upon the foregoing, and all of the files, records and proceedings herein, **IT IS HEREBY ORDERED** that Octane's motion to strike portions of Dr. Rasty's expert report [Docket No. 150] be **DENIED**, and Octane's motion for summary judgment of non-infringement [Docket No. 155] be **GRANTED.**

LET JUDGMENT BE ENTERED ACCORDINGLY.

BY THE COURT:

/s/
ANN D. MONTGOMERY
U.S. DISTRICT JUDGE

Dated: June 17, 2011.

APPENDIX F — MEMORANDUM OPINION AND ORDER OF THE UNITED STATES DISTRICT COURT, DISTRICT OF MINNESOTA, FILED DECEMBER 22, 2010

UNITED STATES DISTRICT COURT
DISTRICT OF MINNESOTA

Civil No. 09-319 ADM/SRN

Icon Health & Fitness, Inc., a Delaware corporation,

Plaintiff,

v.

Octane Fitness, LLC, a Minnesota limited liability company; and Nellie's Exercise Equipment, Inc., a California corporation,

Defendants.

MEMORANDUM OPINION AND ORDER

I. INTRODUCTION

On October 21, 2010, a *Markman* hearing was held before the undersigned United States District Judge in this patent infringement action by Plaintiff Icon Health & Fitness, Inc. ("Icon") against Defendant Octane Fitness, LLC ("Octane").[1] Icon alleges that Octane infringed

1. An unrepresented party, Nellie's Exercise Equipment, Inc. ("Nellie's"), an Octane distributor, is also a Defendant in

claims 1-5, 7, and 9-11 of U.S. Patent No. 6,019,710 (the "'710 patent"). Octane denies the infringement allegations and counterclaims for a declaratory judgment of non-infringement, invalidity, and unenforceability of the '710 patent.

II. BACKGROUND

The '710 patent, entitled "Exercising Device with Elliptical Movement," covers an elliptical exercise machine designed to take up less floor space than prior art models and to allow for adjustable stride length. Pl.'s Opening Mem. Supp. Claim Constr. [Docket No. 131] Ex. A ("'710 patent"). The invention also employed a simpler mechanical design than prior art designs. *Id.* Figure 1 from the '710 patent is shown as Figure 1, below.

---

this litigation. *See* Docket. Nellie's and Octane filed substantially identical counterclaims [Docket Nos. 10, 12, 57]. However, Nellie's counsel withdrew in June 2009, and Nellie's has not participated in subsequent court proceedings, including the claim construction process. Mot. To Withdraw as Counsel [Docket No. 83]; *see generally* Docket. As Nellie's former counsel represented that the causes of action against Nellie's are not expected to advance, the Court will proceed with claim construction based on the arguments propounded by Icon and Octane. Mot. To Withdraw as Counsel.

Appendix F

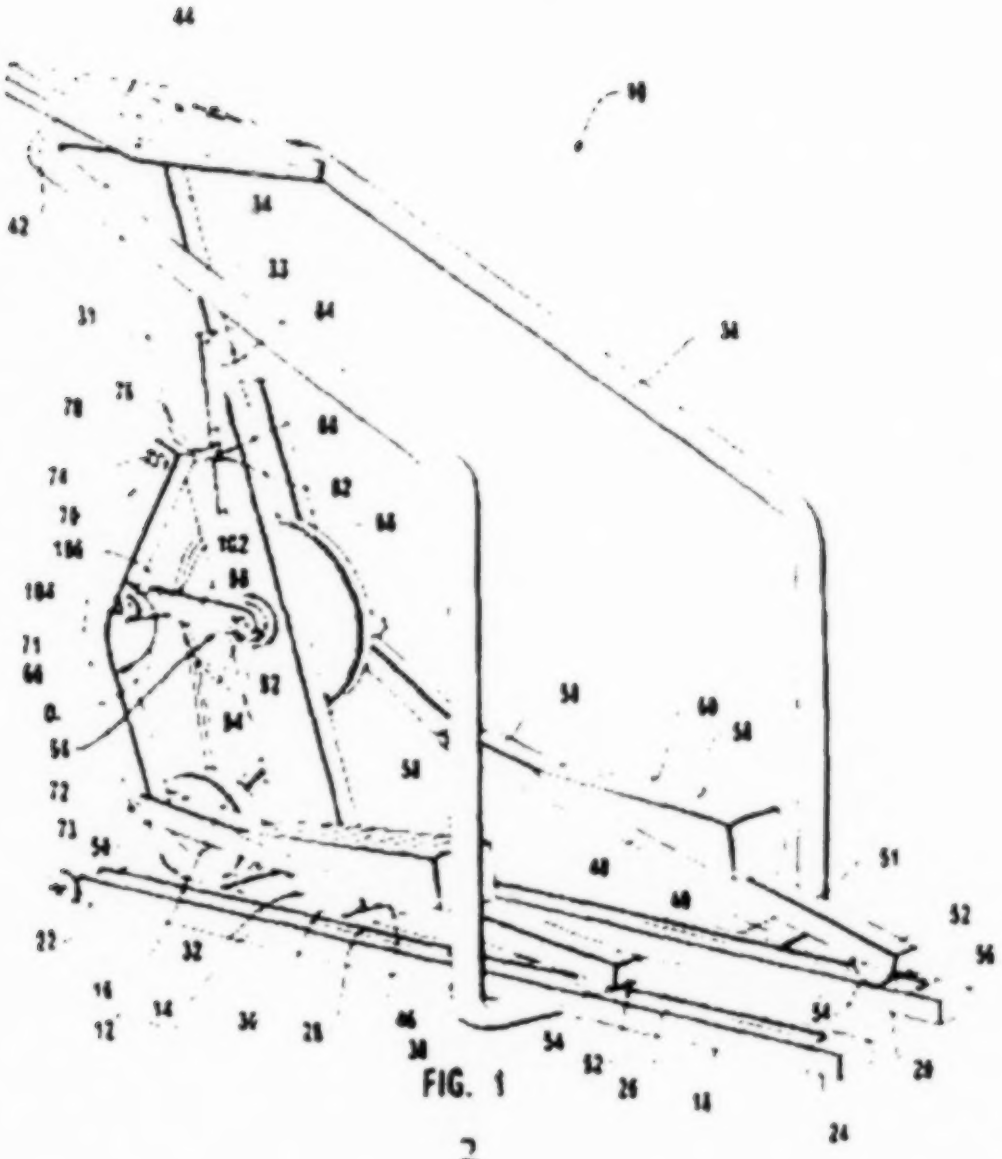

FIG. 1

2

The elliptical machine described in the '710 patent includes a frame with a base configured to rest on a ground surface and a support stand upstanding from the base. '710 patent, col.2 ll.1-4; *see, supra*, Figure 1 (reproduced above). A hand rail extends from the top of the support stand to

each side of the base, and a display board is mounted on top of the hand rail above the support stand. *Id.* at ll.4-6. The machine also includes two foot rails, spaced apart, that are each connected to the support stand by a stroke rail (*see, supra*, Figure 1 (no. 70)) and a rotatable crank arm (*see, supra*, Figure 1, (no. 98)). *Id.* at ll.5-6.

During operation, an exerciser places one foot on each foot rail and moves his or her feet back and forth so that the front end of each foot rail moves in a substantially elliptical path. *Id.* at ll.23-26. When the exerciser's feet move in an elliptical pattern, it simulates a running motion. *Id.* at ll.28-29.

To create an elliptical machine that would occupy a smaller space, the inventors of the '710 patent placed the foot-rail linking mechanism in front of the device rather than in the back of the device. '710 patent, col.1 ll.30-35; *see, infra*, Figure 2. In the '710 patent, a stroke rail is attached to the forward end of a foot rail and connected to the frame via: 1) a pin mounted within a C-shaped channel (the "C-channel") (*see, infra*, Figure 3 (no. 84)) on the support stand; and 2) a collar (*see, infra*, Figure 2 (no. 106)) encircling a pin (*see, infra*, Figure 2 (no. 104)) projecting from a rotatable crank arm (*see, infra*, Figure 2 (no. 98)), which is connected to an axle (*see, infra*, Figure 2 (no. 92)) extending through the support stand. *See, infra*, Figure 2 (stroke rail highlighted).

Appendix F

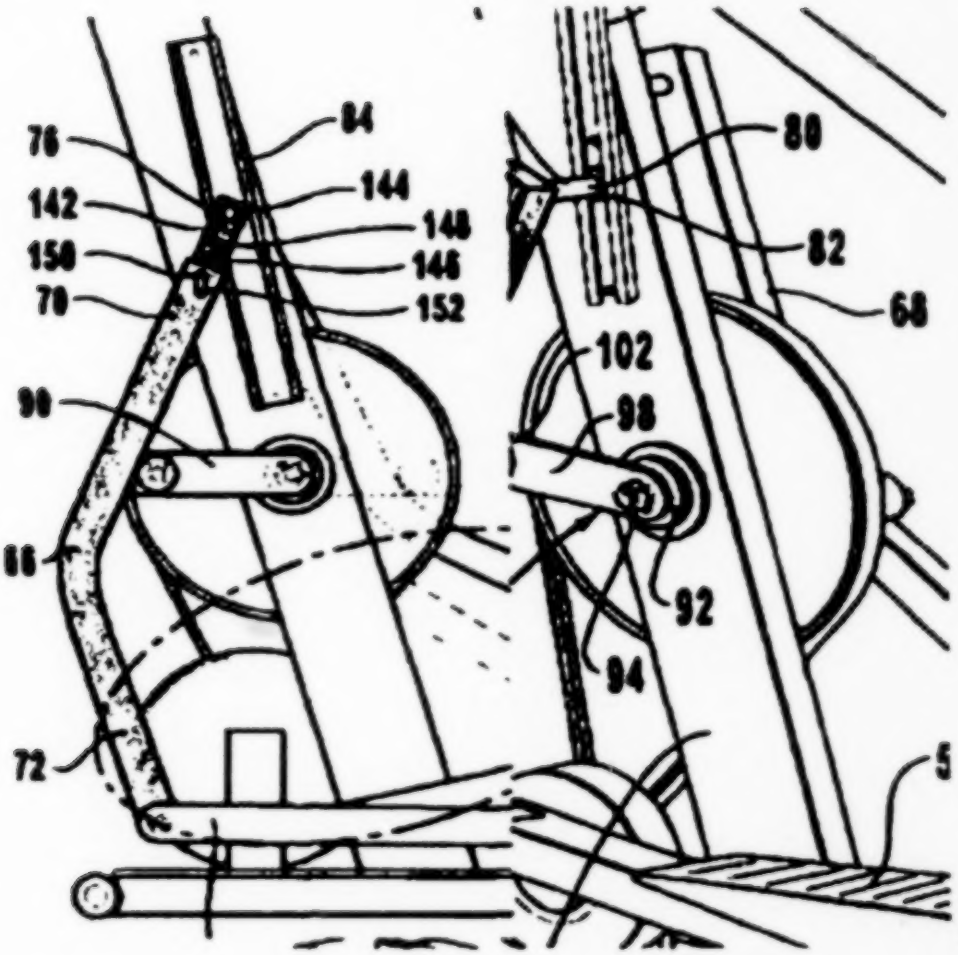

Figure 2

The '710 patent describes two types of stroke rails. The first type, depicted in Figures 1 and 2, is a unitary stroke rail that is not capable of varying in length. *See* '710 patent, Figs. 1, 5; Pl.'s Opening Mem. Supp. Claim Constr. at 14. The second type of stroke rail has the capability to increase or decrease in length via manual adjustment or motorized adjustment. *See* '710 patent, Figs. 5, 6; *see, infra*, Figure 3 (manual), Figure 4 (motorized).

Appendix F

Figure 3

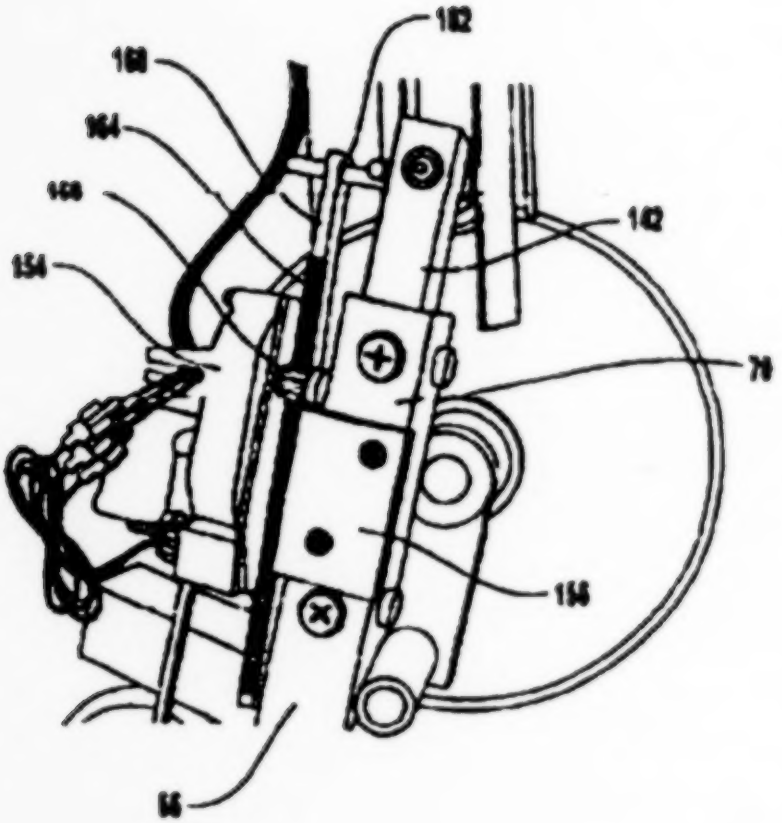

Figure 4

At issue in this litigation are claims 1-5, 7, and 9-11 of the '710 patent. The parties submitted a Joint Claim Construction Statement [Docket Nos. 85, 87, 88], identifying several disputed claim terms and phrases. The Court will construe two claim terms and three claim phrases.

Appendix F

III. DISCUSSION

A. Standard of Review

Claim construction is a matter of law. *Markman v. Westview Instruments, Inc.*, 52 F.3d 967, 979 (Fed. Cir. 1995), *aff'd*, 517 U.S. 370, 116 S. Ct. 1384, 134 L. Ed. 2d 577 (1996). In construing claims, courts should look first to intrinsic evidence, which includes the claims, the specification, and the prosecution history. *Vitronics Corp. v. Conceptronic, Inc.*, 90 F.3d 1576, 1582 (Fed. Cir. 1996). Claim terms are "generally given their ordinary and customary meaning," which is "the meaning that the term would have to a person of ordinary skill in the art in question at the time of the invention, *i.e.*, as of the effective filing date of the patent applicatic " *Phillips v. AWH Corp.*, 415 F.3d 1303, 1312-13 (Fed. Cir. 2005) (quotation and citations omitted). However, a patentee can choose to be "his or her own lexicographer by clearly setting forth an explicit definition for a claim term." *Johnson Worldwide Assocs., Inc. v. Zebco Corp.*, 175 F.3d 985, 989 (Fed. Cir. 1999). Claim terms "should be construed consistently with [their] appearance in other places in the same claim or other claims of the same patent." *Rexnord Corp. v. The Laitram Corp.*, 274 F.3d 1336, 1342 (Fed. Cir. 2001). In addition, the specification is usually "dispositive; it is the single best guide to the meaning of a disputed term." *Vitronics*, 90 F.3d at 1582. Courts are nonetheless cautioned not to import limitations from the specification into the claims. *Phillips*, 415 F.3d at 1323; *The Laitram Corp. v. NEC Corp.*, 163 F.3d 1342, 1347 (Fed. Cir. 1998).

Appendix F

While courts can consider extrinsic evidence to educate themselves about the patent and technology at issue, it is improper to rely on extrinsic evidence in construing claims unless, after consideration of all the intrinsic evidence, ambiguity remains. ***Mantech Envtl. Corp. v. Hudson Envtl. Servs., Inc.***, 152 F.3d 1368, 1373 (Fed. Cir. 1998); *Vitronics*, 90 F.3d at 1584. Extrinsic evidence is "evidence which is external to the patent and file history, such as expert testimony, inventor testimony, dictionaries, and technical treatises and articles." *Vitronics*, 90 F.3d at 1584. Dictionaries may be useful to courts in understanding the ordinary and customary meaning of words, and courts may "rely on dictionary definitions when construing claim terms, so long as the dictionary definition does not contradict any definition found in or ascertained by a reading of the patent documents." *Phillips*, 415 F.3d at 1322-23.

B. "Stroke Rail"

Icon submits that the term "stroke rail" does not need to be construed. Alternatively, Icon proposes the following construction: "A structure comprised of one or more parts that is attached to a foot rail and connected to the frame." Pl.'s Opening Mem. Supp. Claim Constr. [Docket No. 131] Ex. B ("Disputed Claims Chart"). For its part, Octane submits the following construction: "A linear or curved bar, which can be made to vary in length, extending from a foot rail to a frame on an elliptical machine." *Id.*

First, the parties agree that the term "stroke rail" is a term formulated by the patentees and has no meaning to a

person of ordinary skill in the art. However, to conclude, as Icon urges, that the stroke rail is "a structure comprised of one or more parts" would impermissibly broaden the scope of the '710 patent. Icon's broad construction excludes other inventors from the use of infinite combinations of parts that link a footrail and a frame on an elliptical machine. *See Phillips*, 415 F.3d 1303, 1312 (Fed. Cir. 2005) (stating that the words of the patent claim define the invention to which a patentee is entitled the right to exclude). The Court need not look further than the claims and the specification to discover that "stroke rail" cannot be so broadly construed. *See Vitronics*, 90 F.3d at 1582. The embodiments of the stroke rail described in the patent claims and depicted in the specification are relatively simple, with the most complex embodiment consisting of a rail and a motorized extender. The intrinsic evidence, then, makes clear that the term "stroke rail" in the '710 patent cannot encompass the complex possibilities implicated by the general phrase "one or more parts" in Icon's proposed construction.

Still, the Court agrees with Icon's argument that it serves no meaningful purpose to substitute the word "bar" for the word "rail," as Octane urges. Additionally, substituting the word "may" for the word "can" in Octane's proposed construction ensures the construction encompasses both a unitary stroke rail and an adjustable stroke rail. Thus, the Court construes a "stroke rail" to be: A linear or curved rail, which may be made to vary in length, extending from a foot rail to a frame on an elliptical machine.

Appendix F

C. "Linear Reciprocating Displacement"

Octane submits that the term "linear reciprocating displacement" does not require construction. Disputed Claims Chart at 3. In contrast, Icon proposes the following construction: "A change in position from a first point to a second point followed by a change in position from the second point back to the first point, where the change in position from one point to the other results in a net change in position along a line. Linear reciprocating displacement does not require movement along a linear path." *Id.*

Octane argues that "linear means linear," and that the ordinary and customary meaning of "linear reciprocating displacement" is movement back and forth in a straight line. Def.'s Resp. Br. [Docket No. 134] at 22-23. An examination of the '710 patent's claims and specification make clear that one end of a stroke rail slides back and forth (*i.e.*, reciprocates) in a linear path by means of a straight "C-channel." '710 patent, col.2 ll.12-13, col.4 ll.3-17, col.5 ll.46-48, and col.6 ll.14-18; Figs. 1-6; *see, supra*, Figures 1-3. The claims describe how the first end of the stroke rail moves back and forth within the C-channel, creating elliptical movement of the second end of the stroke rail. *Id.* Nothing in the '710 patent indicates that the first end of the stroke rail should move in anything other than a straight line. There is no evidence that the patentees intended the C-channel to be non-linear, or that the first end of the stroke rail be connected to the support stand by anything other than a straight C-channel.

In response, Icon points to various dictionary definitions of the term "linear reciprocating displacement."

However, dictionary definitions are extrinsic evidence. As the construction of the claim term "linear reciprocating displacement" is resolved based on intrinsic evidence—the ordinary and customary meaning of the claim language and the specification—examination of extrinsic evidence is unnecessary and improper. *See Mantech*, 152 F.3d at 1373; *see also Phillips*, 415 F.3d at 1312-13 ("Importantly, the person of ordinary skill in the art is deemed to read the claim term not only in the context of the particular claim in which the disputed term appears, but in the context of the entire patent, including the specification."). Accordingly, the Court concludes that no construction of "linear reciprocating displacement" is necessary.

D. Means-Plus-Function Claim Phrases

The remaining disputed claim elements are subject to a means-plus-function analysis. Means-plus-function claim elements are interpreted according to 35 U.S.C. § 112, ¶ 6:

> An element in a claim for a combination may be expressed as a means or step for performing a specified function without the recital of structure, material, or acts in support thereof, and such claim shall be construed to cover the corresponding structure, material, or acts described in the specification and equivalents thereof.

"Whether certain claim language invokes 35 U.S.C. § 112, ¶ 6 is an exercise in claim construction and . . . a question of law." *Personalized Media Commc'ns, LLC v. Int'l*

Trade Comm'n, 161 F.3d 696, 702 (Fed. Cir. 1998). The claim phrases construed below are written in means-plus-function form, and the parties agree that all three claim phrases are to be construed as a means-plus-function elements.

1. **"Means for connecting each stroke rail to the frame such that linear reciprocating displacement of the first end of each stroke rail results in displacement of the second end of each stroke rail in a substantially elliptical path."**

   i. Function

Icon proposes the following function: "connecting each stroke rail to the frame in a manner that results in displacement of the second end of each stroke rail in a substantially elliptical path if the first end undergoes linear reciprocating displacement." Disputed Claims Chart at 2. Octane proposes that the function recited in this element, "connects each stroke rail to the frame such that linear reciprocating displacement of the first end of each stroke rail results in displacement of the second end of each stroke rail in a substantially elliptical path," requires no construction because the plain and ordinary meanings of the terms used to describe the function are sufficiently clear. Disputed Claims Chart at 2-3. The Court agrees. *See Phillips*, 415 F.3d at 1312-13. Thus, no construction of the function is necessary.

Appendix F

ii. Corresponding Structure

Icon proposes the following corresponding structure: "An axle mounted to a pair of crank arms, a pin projecting from each crank arm, and a collar encircling each pin. The axle is mounted to the frame and each collar is attached to a stroke rail." Disputed Claims Chart at 2. Octane proposes a much narrower description of the corresponding structure, referencing the numbered parts depicted in Figure 1 of the '710 patent (*see*, *supra*, Figure 1):

> 1) Pin 76 (and the corresponding pin on the opposite side of the frame from pin 76, that is not labeled);
>
> 2) Nut 78 (and the corresponding nut on the opposite side of the frame from nut 78, that is not labeled);
>
> 3) Flared head 82 (and the corresponding flared head on the opposite side of the frame from flared head 82, that is not labeled);
>
> 4) C-shaped channel 84 (and the corresponding C-shaped channel on the opposite side of the frame from C-shaped channel 84, that is not labeled);
>
> 5) Axle 92;
>
> 6) Crank arms 98 and 100;

7) Nuts 94 and 96;

8) Pins 104 and 105 (pin 105 is not labeled in the Figures of the '710 patent);

9) Collars 106 and 107 (107 is not labeled in the Figures of the '710 patent);

10) Spot welds that hold the two collars, referenced in 9) above, to the stroke rails 66 and 68; and

11) Nuts/washers at the end of pins 104 and 105.

Id. at 2-3.

The function of this claim phrase is to connect the stroke rail to the frame in such a way as to cause the first end of the stroke rail to undergo linear reciprocating displacement (which then causes the second end of the stroke rail to move in an elliptical path). The Federal Circuit teaches that the corresponding structure must include all structure that "actually performs the recited function." *Cardiac Pacemakers, Inc. v. St. Jude Med., Inc.*, 296 F.3d 1106, 1119 (Fed. Cir. 2002); *Asyst Techs., Inc. v. Empak, Inc.*, 268 F.3d 1364, 1371 (Fed. Cir. 2001). Thus, the corresponding structure here must simultaneously connect the stroke rail to the frame and cause the first end of the stroke rail to undergo linear reciprocating displacement.

The parties agree, and the Court accepts, that the corresponding structure includes an axle mounted to the

frame and also mounted to a pair of crank arms, a pin projecting from each crank arm, and a collar encircling each pin that is attached to a stroke rail. The parties disagree as to whether the following are corresponding structure: 1) the C-channel, corresponding pin, and flared head; 2) the spot welds connecting the collar to the stroke rail, and 3) various nuts and washers.

The Court finds that the corresponding structure that performs the recited function must include the C-channel and corresponding pin. Linear reciprocating displacement of the first end of the stroke rail is caused when the pin, which is connected to the stroke rail, moves up and down within the straight C-channel. Icon argues that because claims 8 and 12 of the patent articulate that one end of the stroke rail is "slidably attached," the "claim differentiation" doctrine dictates that the C-channel cannot be corresponding structure. However, the Federal Circuit has held that the doctrine of claim differentiation cannot override means-plus-function construction required by 35 U.S.C. § 112, ¶ 6. *Laitram Corp. v. Rexnord, Inc.*, 939 F.2d 1533, 1538 (Fed. Cir. 1991) ("Claim differentiation is a guide, not a rigid rule. If a claim will bear only one interpretation, similarity will have to be tolerated.") (quoting *Autogiro Co. of Am. v. United States*, 384 F.2d 391, 404, 181 Ct. Cl. 55 (Ct. Cl. 1967)). Thus, although the C-channel and corresponding pin may be articulated in claims 8 and 12, the C-channel and corresponding pin are not excluded as the corresponding structure for this means-plus-function claim element. *See id.* ("[A] means-plus-function limitation is not made open-ended by the presence of another claim specifically claiming the disclosed structure which underlies the means clause or an equivalent of that structure.").

Additionally, the flared head (or the equivalent thereof) must also be included in the corresponding structure because, without it, the pin would slip out of the C-channel (instead of reciprocating in a linear fashion.) *See* '710 patent, col.4 ll.14-16 (stating flared head is "slidably captured within a C-shaped channel"); *Cardiac Pacemakers*, 296 F.3d at 1119. Similarly, the nuts and washers (or the equivalent thereof) connecting the pin to the first end of the stroke rail must be included in the corresponding structure. *Cardiac Pacemakers*, 296 F.3d at 1119.

The same reasoning applies equally to 1) the spot welds attaching the collar to the stroke rail and 2) the nuts and washers connecting the pin to the collar. Without the spot welds, or their equivalents, the collar would not be attached to the stroke rail. As the connection between the collar and the stroke rail is required to produce any movement at all, let alone linear reciprocating displacement, the spot welds are corresponding structure. Similarly, the nuts and washers (or the equivalents thereof) are required to keep the pin within the collar. Icon argues that the corresponding structure cannot be limited by the term "spot welds" because the '710 patent's detailed description of the preferred embodiments states that the collars are "spot welded *or otherwise secured*" to the stroke rails. '710 patent, col.4 ll.50-56 (emphasis added). In so arguing, Icon attempts to impermissibly broaden its patent claim. *See, e.g., Halliburton Energy Svcs., Inc. v. M-I LLC*, 514 F.3d 1244, 1256 n.7 (Fed. Cir. 2008) (noting that § 112, ¶ 6 "was meant to preclude the over breadth inherent in open-ended functional claims . . . which effectively purport to cover any and all means so long as they perform the recited functions"); *see also*

Neopost Industrie B.V. v. PFE Int'l, Inc., No. 04-5047, 2005 WL 6266289, *4 (N.D. Ill. Apr. 26, 2005) (stating "general, catch-all statement cannot eviscerate the requirement that a means-plus-function limitation is 'sharply limited' to the structures disclosed in the written description and their equivalents" and refusing to "impermissibly entitle" plaintiff to "claims that are 'unbounded by any reference to structure' in the written description.") (quoting *Medical Instrumentation and Diagnostics Corp. v. Elektra AB*, 344 F.3d 1205, 1211 (Fed. Cir. 2003)). The only undisclosed structures that can be included within the construction of a means-plus-function limitation are the structural equivalents expressly contemplated by § 112 ¶ 6. *Id.* Thus, the spot welds and the nuts and washers connecting the pin to the collar (or the equivalents thereof) are also corresponding structure.

In summary, the Court adopts Octane's proposed construction for this means-plus-function claim phrase. *See* Disputed Claims Chart at 2-3.

2. "Means for selectively varying the size of the substantially elliptical path that the second end of each stroke rail travels."

The parties represented at the hearing that they agree the function, "selectively varying the size of the substantially elliptical path that the second end of each stroke rail travels," needs no construction.

However, Icon proposes the following construction for the corresponding structure: "(1) An arm with holes along

a portion of its length that can be aligned with a pin and a hole in a stroke rail; or (2) an electric motor driving a gear that engages teeth on a bar to move an adjustment arm." Again, Octane counters with a significantly narrower proposed construction:

> There are two embodiments disclosed in the '710 patent that contain structure that corresponds to this function. The first embodiment is referred to herein as the "Manual Adjustment Arm Embodiment" and is shown in Figure 5.
>
> The structure from this embodiment that corresponds to the above-referenced function is:
>
> 1) Adjustment arm 142 (and the corresponding adjustment arm on the opposite side of the frame from adjustment arm 142, that is not shown in the Figures of the '710 patent);
>
> 2) Plurality of holes 148 (and the corresponding plurality of holes on the adjustment arm located on the opposite side of the frame from adjustment arm 142, that is now shown in the Figures of the '710 patent);
>
> 3) Complementary hole 150 located in stroke rail 66 (and the corresponding complimentary [sic] hole in stroke rail 68, that is not shown in the Figures of the '710 patent);

4) Pin 152 (and the corresponding pin located on the opposite side of the frame from pin 152, that is now [sic] shown in the Figures of the '710 patent);

5) Pin 76 (and the corresponding pin on the opposite side of the frame from pin 76, that is not labeled);

6) Nut 78 (and the corresponding nut on the opposite side of the frame from nut 78, that is not labeled);

7) Flared head 82 (and the corresponding flared head on the opposite side of the frame from flared head 82, that is not labeled); and

8) C-shaped 84 (and the corresponding C-shaped channel on the opposite side of the frame from C-Shaped channel 84, that is not labeled).

Disputed Claims Chart at 3-4.

The second embodiment is referred to herein as the "Motorized Adjustment Arm Embodiment" and is shown in Figure 6. The structure from this embodiment that corresponds to the above-reference function is:

1) Electric motor 154 (and the corresponding electric motor located on the opposite side of the frame from electric motor 154, that is not shown in the Figures of the '710 patent);

Appendix F

2) Bracket 156 (and the corresponding bracket located on the opposite side of the frame from bracket 156, that is not shown in the Figures of the '710 patent);

3) Gear 158 (and the corresponding gear located on the opposite side of the frame from gear 158, that is not shown in the Figures of the '710 patent);

4) Elongated engagement bar 160 (and the corresponding elongated engagement bar located on the opposite side of the frame from elongated engagement bar 160, that is not shown in the Figures of the '710 patent);

5) Teeth 164 (and the corresponding teeth located on the opposite side of the frame from teeth 164, that are not shown in the Figures of the '710 patent);

6) Adjustment arm 142 (and the corresponding adjustment arm located on the opposite side of the frame from adjustment arm 142, that is not shown in the Figures of the '710 patent);

7) Rod that connects elongated engagement bar 160 to adjustment arm 142 (and the corresponding rod located on the opposite side of the frame from the rod that connects elongated engagement bar 160 to adjustment arm 142, that is not shown in the Figures of the '710 patent);

8) Bias mechanism that biases engagement bar 160 against gear 158 (and the corresponding bias mechanism on the opposite side of the frame from engagement bar 160 and gear 158, that is not shown in the Figures of the '710 patent);

9) Pin 76 (and the corresponding pin on the opposite side of the frame from pin 76, that is not labeled);

10) Nut 78 (and the corresponding nut on the opposite side of the frame from nut 78, that is not labeled);

11) Flared head 82 (and the corresponding flared head on the opposite side of the frame from flared head 82, that is not labeled); and

12) C-shaped channel 84 (and the corresponding C-shaped channel on the opposite side of the frame from C-shaped channel 84, that is not labeled).

Id. at 4-6.

First, Icon and Octane disagree as to whether the nuts, washers, spot welds, C-channel, corresponding pin and flared head are corresponding structure. Applying the reasoning set forth in Part D(1)(ii), *supra*, the nuts, washers, and spot welds described by Octane, or the equivalents thereof, are corresponding structure. *Cardiac Pacemakers*, 296 F.3d at 1119.

However, the C-channel is not corresponding structure because it does not perform the recited function of "selectively varying the size of the substantially elliptical path that the second end of each stroke rail travels." As discussed above, the C-channel is corresponding structure for the function of creating linear reciprocating displacement. The C-channel does not, however, vary the size of the elliptical path that the stroke rail travels. For both the manual and motorized embodiments, the method of varying the size of the elliptical path consists of increasing or decreasing the length of the stroke rail. '710 patent, col.2 ll.47-51, col.6 ll.28-42. ("By extending or retracting the adjustment arm within the corresponding stroke rail, the effective length of the stroke rail is varied. By varying the effective length of the stroke rail, the stride over which the foot rails travel is varied.") The C-channel, corresponding pin, and flared head do not change the length of the stroke rail. Therefore, they are not corresponding structure. *See Cardiac Pacemakers*, 296 F.3d at 1119 ("[C]orresponding structure need not include all things necessary to enable the claimed invention to work.").

Next, Icon and Octane disagree as to the level of specificity required to describe the corresponding structure for the manual adjustment and the motorized adjustment alternatives. Icon proposes the corresponding structure for the manual adjustment embodiment be the following: "An arm with holes along a portion of its length that can be aligned with a pin and a hole in a stroke rail." The Court construes the corresponding structure for the manual adjustment embodiment to be: An adjustment arm

with holes along a portion of its length that can be aligned with a pin and a complementary hole in a stroke rail.

Icon proposes the corresponding structure for the motorized adjustment embodiment alternative be the following: "An electric motor driving a gear that engages teeth on a bar to move an adjustment arm." The Court construes the corresponding structure for the motorized adjustment embodiment to be: An electric motor driving a gear that engages teeth on an elongated engagement bar to move an adjustment arm. The electric motor is mounted to the stroke rail by a bracket, and the adjustment arm is connected to the elongated engagement bar by a rod.

3. **"Means for coupling each crank arm to a corresponding stroke rail so as to enable free rotation of the axle."**

The parties agree that the function, "coupling each crank arm to a corresponding stroke rail so as to enable free rotation of the axle," requires no construction, as the plain and ordinary meanings of the terms used to describe the function are sufficiently clear.

Again, the parties disagree as to the corresponding structure. Icon proposes the following construction for corresponding structure: "A pair of collars, each encircling a pin. Each pin projects from a crank arm and each collar is attached to a stroke rail." Octane proposes the following construction:

Appendix F

The structure from the specification of the '710 patent that corresponds to this function is:

1) Pins 104 and 105 (pin 105 is not labeled in the Figures of the '710 patent);

2) Collars 106 and 107 (collar 107 is not labeled in the Figures of the '710 patent);

3) Spot welds that hold the two collars, referenced in 2) above, to the stroke rails 66 and 68; and

4) Nuts/washers at the end of pins 104 and 105.

Consistent with the reasoning set forth above, the Court adopts the following construction for the corresponding structure that performs the recited function of "coupling each crank arm to a corresponding stroke rail so as to enable free rotation of the axle": A pair of collars, each encircling a pin. Each pin projects from a crank arm and each collar is attached to a stroke rail via spot welds or their equivalents. Nuts and washers, or the equivalents thereof, are positioned at the end of the pins.

Appendix F

IV. CONCLUSION

Based upon the foregoing, and all of the files, records and proceedings herein, **IT IS HEREBY ORDERED** that, in interpreting the '710 patent, the contested terms be construed in accordance with this Order.

BY THE COURT:

/s/_____
ANN D. MONTGOMERY
U.S. DISTRICT JUDGE

Dated: December 22, 2010.

APPENDIX G — ORDER DENYING PETITION FOR REHEARING AND REHEARING *EN BANC* OF THE UNITED STATES COURT OF APPEALS FOR THE FEDERAL CIRCUIT, DATED DECEMBER 27, 2012

NOTE: This order is nonprecedential.

UNITED STATES COURT OF APPEALS
FOR THE FEDERAL CIRCUIT

ORDER

A petition for rehearing *en banc* having been filed by the Cross-Appellant, and the matter having first been referred as a petition for rehearing to the panel that heard the appeal, and thereafter the petition for rehearing *en banc* having been referred to the circuit judges who are in regular active service,

UPON CONSIDERATION THEREOF, it is

ORDERED that the petition for rehearing be, and the same hereby is, DENIED and it is further

ORDERED that the petition for rehearing *en banc* be, and the same hereby is, DENIED.

The mandate of the court will issue on January 3, 2013.

Appendix G

FOR THE COURT

/s/_____
Jan Horbaly
Clerk

Dated: 12/27/2012

cc: David R. Wright
Rudolph A. Telscher Jr.

ICON HEALTH V OCTANE FITNESS,
2011-1521, -1636
(DCT-09-CV-0319)

OPPOSITION BRIEF

No. 12-1184

In The
Supreme Court of the United States

OCTANE FITNESS, LLC,

Petitioner,

v.

ICON HEALTH & FITNESS, INC.,

Respondent.

On Petition For Writ Of Certiorari To The United States Court Of Appeals For The Federal Circuit

BRIEF IN OPPOSITION TO PETITION FOR A WRIT OF CERTIORARI

LARRY R. LAYCOCK
Counsel of Record
DAVID R. WRIGHT
JARED J. BRAITHWAITE
MASCHOFF BRENNAN LAYCOCK GILMORE ISRAELSEN & WRIGHT
201 S. Main Street, Suite 600
Salt Lake City, Utah 84111
(435) 252-1360
llaycock@maschoffbrennan.com
Attorneys for Respondent

COCKLE LAW BRIEF PRINTING CO. (800) 225-6964
OR CALL COLLECT (402) 342-2831

QUESTION PRESENTED

Patent infringement claims between industry competitors, ICON Health & Fitness, Inc. and Octane Fitness, LLC, were decided below on summary judgment. Both lower courts held that this case was not an "exceptional" patent case that would warrant the award of attorney fees to the prevailing party. Should this Court reverse the lower courts through judicial expansion of the attorney fee-shifting statute found in 35 U.S.C. § 285?

CORPORATE DISCLOSURE STATEMENT

The respondent and plaintiff below is ICON Health & Fitness, Inc. HF Holdings, Inc. is the parent corporation of ICON. Credit Suisse Group, a publicly held corporation, owns 10% or more of the stock of ICON.

TABLE OF CONTENTS

Page

QUESTION PRESENTED i

CORPORATE DISCLOSURE STATEMENT ii

TABLE OF AUTHORITIES v

RESPONDENT'S BRIEF IN OPPOSITION 1

STATEMENT OF THE CASE 3

REASONS FOR DENYING THE PETITION 10

I. The Court should deny the petition because the district court's determination and Federal Circuit's affirmance on appeal that this case is not exceptional were in accordance with legislative intent and historical precedent 10

A. The history of 35 U.S.C. § 285 shows that a court should consider awarding fees to prevailing defendants only in limited circumstances 12

B. Octane asks the Court to consider a standard that is at odds with legislative history and well established precedent 16

C. The standard, employed below, for an award of attorney fees in "exceptional cases" is the same for patent plaintiffs and defendants – Octane's proposed expansion of the standard is not 16

TABLE OF CONTENTS – Continued

Page

II. The Court should deny the petition because it asks for expansion of the statute providing for fee awards in patent cases, which is a matter for Congress, not an issue for this Court 19

III. The decision below that this is not an exceptional case is a fact-bound application of law that was correctly decided 23

IV. The petition should be denied because it asks the Court to decide an issue that was not considered or reviewed by either lower court 26

CONCLUSION 28

TABLE OF AUTHORITIES

Page

CASES

Alyeska Pipeline Serv. Co. v. Wilderness Soc'y, 421 U.S. 240, 95 S.Ct. 1612, 44 L. Ed. 2d 141 (1975) 11

Am. Chain & Cable Co. v. Rochester Ropes, Inc., 199 F.2d 325 (4th Cir. 1952) 12, 15

Brooks Furniture Mfg., Inc. v. Dutailier Int'l, Inc., 393 F.3d 1378 (Fed. Cir. 2005) ..... *passim*

Checkpoint Sys., Inc. v. All-Tag Sec. S.A., 711 F.3d 1341 (Fed. Cir. 2013) 26

Eltech Sys. Corp. v. PPG Indus., Inc., 903 F.2d 805 (Fed. Cir. 1990) 14, 18

Epcon Gas Sys., Inc. v. Bauer Compressors, Inc., 279 F.3d 1022 (Fed. Cir. 2002) 11, 14, 15

i4i OR, LLC v. Google, Inc., 631 F.3d 1372 (Fed. Cir. 2011) 17, 25

In re Seagate Technology, LLC, 497 F.3d 1360 (Fed. Cir. 2007) 17

Lamie v. U.S. Tr., 540 U.S. 526, 124 S.Ct. 1023, 157 L. Ed. 2d 1024 (2004) 20

Laufenberg, Inc. v. Goldblatt Bros., Inc., 187 F.2d 823 (7th Cir. 1951) 12, 15

Lewis v. City of Chicago, Ill., 560 U.S. 205, 130 S.Ct. 2191, 176 L. Ed. 2d 967 (2010) 20

Mathis v. Spears, 857 F.2d 749 (Fed. Cir. 1988) 11, 14

Mobil Oil Corp. v. Higginbotham, 436 U.S. 618, 98 S.Ct. 2010, 56 L. Ed. 2d 581 (1978) 20

TABLE OF AUTHORITIES – Continued

Page

Nat'l Fed'n of Indep. Bus. v. Sebelius, 132 S.Ct. 2566, 183 L. Ed. 2d 450 (2012) 19

Prof'l Real Estate Investors, Inc. v. Columbia Pictures Indus., Inc., 508 U.S. 49, 113 S.Ct. 1920, 123 L. Ed. 2d 611 (1993) 18

Reactive Metals & Alloys Corp. v. ESM, Inc., 769 F.2d 1578 (Fed. Cir. 1985) 12

Rohm & Haas Co., 736 F.2d 688 (Fed. Cir. 1984) 11, 13, 15

Sun-Tek Indus., Inc. v. Kennedy Sky Lites, Inc., 929 F.2d 676 (Fed. Cir. 1991) 14

United States v. Locke, 471 U.S. 84, 105 S.Ct. 1785, 85 L. Ed. 2d 64 (1985) 20

United States v. United Foods, Inc., 533 U.S. 405 (2001) 28

United States v. United States Steel Corp., 251 U.S. 417, 40 S.Ct. 293, 64 L. Ed. 343 (1920) 23

Wedgetail Ltd. v. Huddleston Deluxe, Inc., 576 F.3d 1302 (Fed. Cir. 2009) 11, 14, 15

STATUTES

35 U.S.C. § 285 (2012) ..... *passim*

OTHER AUTHORITIES

Black's Law Dictionary 1402 (6th ed. 1990) 24

D. Chisum, *Patents*, § 20.03[4][c][iii] 15

TABLE OF AUTHORITIES – Continued

Page

H.R. 6245, 112th Cong. (2d Sess. 2012).....20, 21

H.R. 845, 113th Cong. (1st Sess. 2012).....21, 22

P.J. Federico, Commentary on the New Patent Act, Title 35, United States Code Annotated.....13

S.Rep. No. 1503, 79th Cong., 2d Sess. (1946).....12

RESPONDENT'S BRIEF IN OPPOSITION

As both courts below have concluded, when petitioner's storied portrayal of this case is stripped of its spectacle, the case is unexceptional. Respondent ICON Health & Fitness, Inc. ("ICON") brought a legitimate claim for patent infringement against one of its competitors, petitioner Octane Fitness, LLC ("Octane"). And after a hard-fought case, on both sides, the district court granted Octane's motion for summary judgment. Octane then attempted – unsuccessfully – to paint this case as an example of a malicious and baseless suit between an industry giant and its small-time competitor. But in full view of the facts and merits of ICON's case, both the district court and the Federal Circuit rejected Octane's excessive portrayal.

The district court expressly found, that, despite Octane's depiction of the facts, ICON's case was not frivolous or objectively baseless and that it was not brought in bad faith. Thus, although in "exceptional" cases, 35 U.S.C. § 285 allows a court to exercise discretion to award attorney fees, after review of the facts and the merits of ICON's case, the district court found that this case was not exceptional and denied Octane's motion for fees.

Octane then revised and repeated its allegations to the United States Court of Appeals for the Federal Circuit. But after looking through Octane's claims to the actual record, the Federal Circuit discounted Octane's allegations and summarily affirmed the

district court's finding that this case is not exceptional – not even worthy of a published opinion.

Octane then petitioned to have its story reheard *en banc*. Again, denied. There is simply nothing exceptional or even special about this case.

Undeterred in its quest for an award of attorney fees, Octane petitions this Court to yet again hear its twice-rejected tale that this is an exceptional case. In doing so, it asks the Court to review and then reverse the lower courts through judicial expansion of the attorney fee-shifting statute, found in 35 U.S.C. § 285.

Respondent ICON respectfully requests that the Court deny Octane's petition for a writ of certiorari for at least four reasons:

First, contrary to Octane's contention, the standard employed by the lower courts for determining whether this case is exceptional was in accordance with legislative intent and historical precedent.

Second, expansion of the statutory provision providing for attorney fee awards in patent cases and the policy for doing so is a matter for Congress to consider. The Court should not grant Octane's petition on a matter in order to supplant Congress on matters that may be opposed to current congressional intent.

Third, the decision below, a fact-bound application of law, was correct. This is not an exceptional case by any precedential measure.

Fourth, Octane improperly presents its most recent proposed exceptionality standard to this Court for the first time. It asks the Court to decide an issue that was not considered or reviewed by either lower court.

STATEMENT OF THE CASE

Octane's statement of the case retells the same story presented – and rejected – by the courts below. Octane goes to great lengths to rehash its motion arguments regarding patent claim construction and summary judgment even though neither is an issue presented for appeal in its petition. Octane's petition seems to manifest a belief that if it merely characterizes things as "baseless," "frivolous," or "spurious" often enough, the reader should accept that characterization. But, as the courts below concluded, Octane's mere assertion of something does not make it so.

ICON now offers the following information to correct and clarify the record as it relates to Octane's misleading recitation of the facts and presents the facts as they truly are and as the district court found them to be.

ICON's legitimate, but ultimately unsuccessful patent infringement claims

On April 23, 2008, ICON filed a complaint in the United States District Court for the Central District

of California, asserting that Octane and Nellie's Exercise Equipment, Inc. ("Nellie's") were infringing U.S. Patent No. 5,104,120 ("the '120 patent") and U.S. Patent No. 6,019,710 ("the '710 patent").[1] (CA App. A101-06.) Nellie's was one of Octane's distributors in California. (CA App. A102, A104, A187.) Octane and Nellie's both counterclaimed for various forms of declaratory relief. (CA App. A122-34, A135-46.)

In November 2008, the United States District Court for the Central District of California granted a motion severing the claims against Octane from the claims against Nellie's. It then transferred the case between ICON and Octane to the United States District Court for the District of Minnesota, leaving the case between ICON and Nellie's in California. (CA App. A320-24, A2610-13.) ICON thereafter opted to drop the case against Nellie's in California, and that case was dismissed. (CA App. A329.)

After the transfer, in May 2009, based on a stipulation by ICON and Octane, the Minnesota district court entered an order dismissing all claims and counterclaims relating to the '120 patent, leaving only the claims relating to the '710 patent remaining in the case. (CA App. A339, A341.)

---

[1] In its petition, Octane states that ICON brought suit against "Octane Health & Fitness ('Octane'), a much smaller start-up company." (Pet. 2). ICON is unaware of an entity by that name and believes the name "Octane" in the petition is meant to refer to ICON's international competitor Octane Fitness, LLC.

The invention of the '710 patent was invented by ICON personnel and is directed to a new and innovative "elliptical" exercise device. (CA App. A87-100.) A conventional elliptical exercise device includes two spaced-apart foot pads that, when engaged by a user, follow an elliptical path generally intended to simulate the natural motion of running or walking. (CA App. A94, 1:27-35.) The '710 patent discloses an improved elliptical exercise device that both (1) reduces the floor space needed to accommodate such an apparatus and (2) allows adjustments to the size of the elliptical path in order to fit the different strides of individual users. (CA App. A94, 1:39-49, 1:60-65, 2:30-53.)

Octane sells two families of elliptical exercise devices that ICON accused of infringing the '710 patent. Although ICON does not sell a product that is covered by the '710 patent, ICON does sell a product that competes with Octane's machines. (CA App. A1694, A590-591, A165, A2593.)

In October 2010, the district court held a *Markman* hearing to construe the claims of the '710 patent, and, in December 2010, issued a Memorandum Opinion and Order construing various terms of the '710 patent. (CA App. A78, A3-21.) Octane then moved for summary judgment of non-infringement of the '710 patent. (CA App. A79.) The district court concluded that two claim elements were absent from the accused devices, and therefore granted summary judgment of non-infringement. (CA App. A36-46.) However, Octane previously admitted that its accused

products contained one of those elements, but during litigation Octane changed its story. (CA App. A2096, A2095-104.)

Nonetheless, the district court granted Octane's motion for summary judgment in June 2011. (CA App. A22-46.) ICON and Octane then stipulated to the dismissal of Octane's counterclaim for a declaratory judgment of invalidity of the '710 patent, and the court entered final judgment on July 15, 2011. (CA App. A2610-13, A2, A1.)

Octane's motion for attorney fees

Although the district court granted Octane's motion for summary judgment of non-infringement, it denied Octane's motion for attorney fees. (App. to Pet. Cert 19a-28a.)

In its motion for fees, Octane presented the district court with its view that ICON's case was "baseless" and brought in bad faith. (CA App. A2619, A2631, A2633-39.) Specifically, Octane repeatedly demonized ICON as an "industry giant" seeking to "extract" royalties from "a smaller competitor," based on an "old patent" that is asserted by Octane to be "commercially unviable." (CA App. A2622-23, A2631-32.) According to Octane, ICON could not possibly have had any reasonable basis for asserting infringement because Octane's machines, in contrast, have been wildly successful and because part of its machines were subject to another patent pre-dating the '710 patent.

It is telling that even the district court did not rely on any of these assertions. (App. to Pet. Cert 19a-28a.) And that is the way it should be because infringement is determined on the basis of the claims, not on the basis of a comparison with the patentee's commercial embodiment or on the basis of Octane's other extraneous assertions.

Octane particularly trumpeted its discovery of a few colloquial emails between ICON sales personnel as alleged evidence of ICON's bad faith. (CA App. A2622-24.) The first was an internal email dated August 24, 2008 reporting:

> We are suing Octane. Not only are we coming out with a great product to go after them, but throwing a lawsuit on top of that.

(CA App. A2645-48, A2622.) That message was forwarded the next day to a person Octane describes as "a potential customer/retailer" with the following preface:

> Just clearing the way and making sure you guys have all your guns loaded! Look below!

(CA App. A2645, A2631.) Another exchange occurred more than a year later between the sender of the original message and the sender of the second, who had apparently forgotten about the first two emails:

> I heard we are suing Octane!
>
> Yes – old patent we had for a long time that was sitting on the shelf. They are just looking for royalties.

(CA App. A1608, A2623.)

As the district court found, these emails do not prove "bad faith" by ICON. (App. to Pet. Cert 27a.) The district court specifically pointed out that even when viewed "*in the light most favorable to Octane*, these remarks are stray comments by employees with no demonstrated connection to the lawsuit." (App. to Pet. Cert 27a (emphasis added)). Moreover, the district court found that the statements in these emails "do not reflect advice to Icon by its counsel or experts, nor are they evidence of Icon's official position on the merits of the lawsuit." (App. to Pet. Cert 27a.)

Octane argues that the emails are evidence of "Icon's official position" because the sender of two of the emails "was a Vice President at Icon." (CA App. A2631.) In actuality, as the emails themselves show, and as ICON has repeatedly told Octane, the sender was a Vice President at "Free Motion Fitness," which is only a subsidiary of ICON. (CA App. A2645, A1608.) There is no evidence that the sender was an officer or director of ICON, and he was not. (*See* CA App. A1685 ("When I speak I'm speaking for FreeMotion. . . .").)

Indeed, the first email shows that the sender learned about the lawsuit from an industry news publication (which he was forwarding), not from officers of ICON. (CA App. A2645-48.) The district court found that there was "no evidence" that "the remarks were ever seen, much less adopted by, those in a position to decide whether to pursue an infringement action against Octane." (App. to Pet. Cert 27a.)

Octane further stressed that it disagreed with ICON's arguments, positions, and expert analysis during claim construction and in its summary judgment papers. (CA App. A2634-37.) Nevertheless, the district court found ICON's positions and arguments to be reasonable and not objectively baseless or advanced in bad faith. (App. to Pet. Cert 24a-28a.)

All considered, the district court concluded that ICON's case for infringement was reasonable and was neither "objectively baseless" nor asserted in "bad faith." (App. to Pet. Cert 24a-28a.) Therefore, Octane was not entitled to a finding of exceptionality or a consequent award of attorney fees. (App. to Pet. Cert 25a-27a.)

Octane's appeal at the Federal Circuit

ICON appealed the district court's summary judgment and claim construction against it, and Octane cross-appealed the denial of its motion for attorney fees. (CA App. A2614-15, A2753-54.)

To the Federal Circuit, Octane again presented its story about an "industry giant" seeking to "extract" royalties from "a smaller competitor," based on an allegedly "commercially unviable" and "old patent." Octane, again, repeatedly characterized ICON's patent infringement claims as "baseless" and allegedly brought in "bad faith." And Octane, again, trumpeted its prize emails, previously found by the district court to be "stray comments" by employees unconnected to the lawsuit. In addition, Octane argued that the

Federal Circuit should change the determination of "exceptional cases" to avoid considering whether they were brought in bad faith.[2]

The Federal Circuit, in an unpublished opinion, found none of Octane's arguments persuasive. After a full review, the Federal Circuit stated, "we have reviewed the record and conclude that the court did not err in denying Octane's motion to find the case exceptional. We have no reason to revisit the settled standard for exceptionality." (App. to Pet. Cert 17a.)

Octane now asks this Court to grant review of the same story and the same facts to come to a different conclusion than the courts below, which both found after review of all the facts – not just Octane's – that this is not an exceptional case.

REASONS FOR DENYING THE PETITION

I. The Court should deny the petition because the district court's determination and Federal Circuit's affirmance on appeal that this case is not exceptional were in accordance with legislative intent and historical precedent.

The Patent Act, 35 U.S.C. §§ 1 *et seq.*, provides a narrow exception to the American Rule regarding

[2] Octane improperly raised this argument for the first time before the Federal Circuit and does not present it to this Court. Rather Octane's petition presents a new argument never considered below.

payment of attorney fees.[3] It states that "[t]he court in exceptional cases may award reasonable attorney fees to the prevailing party." 35 U.S.C. § 285 (2012). Both historically and currently, "exceptional cases" are those in which there is "willful and deliberate infringement by an infringer," "litigation in bad faith by the patentee, or fraud or other inequitable conduct during prosecution before the PTO." *Rohm & Haas Co.*, 736 F.2d 688, 691-92 (Fed. Cir. 1984); *see also Wedgetail Ltd. v. Huddleston Deluxe, Inc.*, 576 F.3d 1302, 1304 (Fed. Cir. 2009); *Epcon Gas Sys., Inc. v. Bauer Compressors, Inc.*, 279 F.3d 1022, 1034 (Fed. Cir. 2002).

The district court in the case between ICON and Octane declined to award attorney fees because there is nothing "exceptional" about the case. Moreover, the district court's application of the statute and the interpretive case law fall squarely within the legislative history therefor and this Court's precedent. There is no good reason, therefore, to grant Octane's petition to review the lower courts decisions' that are in line with well-established law.

---

[3] The general rule in the United States is that each party to litigation must pay the fees of his or her own counsel. *Alyeska Pipeline Serv. Co. v. Wilderness Soc'y*, 421 U.S. 240, 246-47, 95 S.Ct. 1612, 1616, 44 L. Ed. 2d 141 (1975). This general rule is known as the "American Rule", and it applies equally in patent cases, except in exceptional cases. *See id.*; *see also Mathis v. Spears*, 857 F.2d 749, 758 (Fed. Cir. 1988) ("Congress enacted Section 285 to codify in patent cases the 'bad faith' equitable exception to the American Rule.").

A. The history of 35 U.S.C. § 285 shows that a court should consider awarding fees to prevailing defendants only in limited circumstances.

Importantly, before a court may award reasonable attorney fees, the threshold inquiry is to determine whether a case is "exceptional." In other words, under 35 U.S.C. § 285, courts are not permitted to award attorney fees in *unexceptional* cases. *Reactive Metals & Alloys Corp. v. ESM, Inc.*, 769 F.2d 1578, 1582 (Fed. Cir. 1985) ("A finding of such 'exceptional' circumstances does not, however, mandate an award of attorney fees. It is at this point that the trial court exercises its discretion in making, or not making, an award."), *overruled on other grounds by Kingsdown Med. Consultants, Ltd. v. Hollister Inc.*, 863 F.2d 867 (Fed. Cir. 1988) (en banc).

Prior to its current version, section 285 did not include the "exceptional cases" language and permitted a court "in its discretion" to award attorney fees. S.Rep. No. 1503, 79th Cong., 2d Sess. (1946). Nonetheless, courts still interpreted the statute to allow the exercise of that discretion only in exceptional cases – that is, in cases of willful infringement or vexatious litigation. *See, e.g., Am. Chain & Cable Co. v. Rochester Ropes, Inc.*, 199 F.2d 325, 330 (4th Cir. 1952) ("discretion [to award fees] should not be exercised except in situations involving vexations and unjustified litigation on the part of the patentee"); *Laufenberg, Inc. v. Goldblatt Bros., Inc.*, 187 F.2d 823, 825 (7th Cir. 1951) ("the [fees] statute should be

invoked only where vexatious or unjustified litigation is shown").

To codify the case law, the 1952 Patent Act deleted the "in its discretion" language and replaced it with the current language that permits a court to award attorney fees only in "exceptional cases." 35 U.S.C. § 285 (2012); *see also Rohm & Haas*, 736 F.2d at 690-91. The author of section 285 noted that

> [s]ection 285, providing for the recovery of attorney fees by the prevailing party, is substantially the same as the corresponding sentence of the old statute, with the addition of "in exceptional cases" to express the intention of the old statute as shown by its legislative history and as interpreted by the courts.

Id. at 691 (citing P.J. Federico, Commentary on the New Patent Act, Title 35, United States Code Annotated, page 1, at 56). Courts are permitted discretion to award attorney fees – but that discretion is limited to exceptional cases. *See* 35 U.S.C. § 285 ("The court in exceptional cases *may* award reasonable attorney fees. . . ." (emphasis added)).

The historical bases for considering a case an "exceptional" one are those in which there is "willful and deliberate infringement by an infringer," "litigation in bad faith by the patentee, or fraud or other inequitable conduct during prosecution before the PTO." *Rohm & Haas*, 736 F.2d at 691-92; *see also*

Wedgetail, 576 F.3d at 1304; *Epcon Gas*, 279 F.3d at 1034.

In its petition, Octane contends that previous interpretation of "exceptional cases" was based on a "totality of the circumstances," the court's discretion, and included cases other than bad faith litigation, litigation misconduct, fraud or inequitable conduct, and frivolous or baseless litigation. (Pet. 21 citing *Mathis v. Spears*, 857 F.2d 749 (Fed. Cir. 1988); *Eltech Sys. Corp. v. PPG Indus., Inc.*, 903 F.2d 805, 810 (Fed. Cir. 1990); *Sun-Tek Indus., Inc. v. Kennedy Sky Lites, Inc.*, 929 F.2d 676, 679 (Fed. Cir. 1991).) Not So – Octane's cited cases do not support that position. *See Mathis*, 857 F.2d at 758 ("Congress enacted Section 285 to codify in patent cases the '*bad faith*' equitable exception to the American Rule." (emphasis added)); *Eltech*, 903 F.2d at 811 (to recover fees, both sides to litigation are "required to prove the other guilty of *bad faith litigation* by clear and convincing evidence in light of the totality of the circumstances" (emphasis added)); *Sun-Tek*, 929 F.2d at 678 (quoting *Mathis*).

Importantly, Octane's petition is based on the misinterpretation that courts should have unfettered discretion to decide if a case is an exceptional one. But historical precedent shows "[o]nce an exceptional case is found, the court *then* has discretion to determine whether or not reasonable attorney fees should be granted." *Sun-Tek*, 929 F.2d at 678 (emphasis in original).

The guidance by the Federal Circuit as to which cases are exceptional is squarely in accordance with the legislative history of section 285 and judicial precedent reaching back to at least the 1950s. Specifically, "[a]bsent misconduct in conduct of the litigation or in securing the patent, sanctions [under 35 U.S.C. § 285] may be imposed against the patentee only if both (1) the litigation is brought in subjective bad faith, and (2) the litigation is objectively baseless." *Brooks Furniture Mfg., Inc. v. Dutailier Int'l, Inc.*, 393 F.3d 1378, 1381 (Fed. Cir. 2005).[4] This standard covers the historical bases for considering a case exceptional – i.e., litigation misconduct, fraud or inequitable conduct in securing a patent, and vexatious, bad faith, or baseless patent suits. *See Wedgetail*, 576 F.3d at 1304; *Epcon*, 279 F.3d at 1034; *American Chain*, 199 F.2d at 330; *Laufenberg*, 187 F.2d at 825; *Rohm & Haas*, 736 F.2d at 690-91; *see also* D. Chisum, *Patents*, § 20.03[4][c][iii] at note 412 (citing an extensive list of cases involving bad faith litigation or inequitable conduct in procuring the patents-in-suit). Moreover, the above-standard attempts to focus the award of attorney fees to only exceptional cases, rather than any case.

The lower courts' determinations that this is not an exceptional case were correct, and this Court should deny Octane's petition to review them.

---

[4] Of course, willful patent infringement is a non-issue against the patent-holder asserting the infringement claim.

B. Octane asks the Court to consider a standard that is at odds with legislative history and well established precedent.

If its petition is granted, Octane asks this Court to adopt a standard for exceptional cases that is nowhere to be found in historical precedent or the legislative history. Octane asks the Court to include within the pool of "exceptional cases" those cases by patent holders with an "objectively low likelihood of success" on the merits. (Pet. 33.) Octane cites to nothing in the legislative history or historical precedent that supports consideration of that standard by this Court.

Thus, it is Octane that asks this Court to disregard historical precedent and the legislative intent of section 285 to judicially expand the application of section 285 to unexceptional cases, like ICON's case against Octane, and the Court should decline the petition to hear it.

C. The standard, employed below, for an award of attorney fees in "exceptional cases" is the same for patent plaintiffs and defendants – Octane's proposed expansion of the standard is not.

Octane's petition decries that it is too hard for it to prove that its case is an exceptional one. First and foremost, this is because ICON's case against Octane is not exceptional by any precedential measure.

Nonetheless, Octane asks for a relaxing of the determination of exceptional cases to exclude consideration of subjective bad faith. In addition, it asks that attorney fees be awarded in more patent cases by allowing for fees that have an "objectively low likelihood of success on the merits." Such requests do not lead to equal application of "exceptional case" determinations for both plaintiffs and defendants and are at odds with historical precedent. Accordingly, the standards employed by the lower courts are correct and in line with well-established law, and this Court should not take occasion to review them.

"The objective baselessness standard for enhanced damages and attorneys' fees against a non-prevailing plaintiff under *Brooks Furniture* is identical to the objective recklessness standard for enhanced damages and attorneys' fees against an accused infringer for § 284 willful infringement. . . ." *iLOR, LLC v. Google, Inc.*, 631 F.3d 1372, 1377 (Fed. Cir. 2011).

Absent litigation misconduct or bad faith litigation, a plaintiff may recover attorney fees against a defendant in exceptional cases, such as when the defendant is found to have willfully infringed the asserted patent. *See, e.g., In re Seagate Technology, LLC*, 497 F.3d 1360, 1370-71 (Fed. Cir. 2007) (en banc). A willful infringement determination requires inquiry into the defendant's conduct using both objective and subjective measures. *Id.*

Likewise, absent bad faith litigation or inequitable conduct in obtaining the patent, a defendant may

recover attorney fees against a plaintiff in exceptional cases, such as in a case of frivolous, vexatious, or bad faith litigation. *Brooks Furniture*, 393 F.3d at 1381-82. Like a willfulness determination, the determination of frivolous, vexatious, or bad faith litigation requires inquiry into the plaintiff's conduct using both objective and subjective measures. *Id.*; *see also Prof'l Real Estate Investors, Inc. v. Columbia Pictures Indus., Inc.*, 508 U.S. 49, 60-61, 113 S.Ct. 1920, 123 L. Ed. 2d 611 (1993).

Octane argues that the subjective component should be excised from the determination of frivolous, vexatious, or bad faith litigation. But it only makes sense that if a patentee must prove both objective and subjective components in order to obtain attorney fees, an accused infringer must do so as well. *Eltech Sys. Corp. v. PPG Indus., Inc.*, 903 F.2d 805, 811 (Fed. Cir. 1990) ("[T]here should be no difference in the standards applicable to patentees and infringers who engage in bad faith litigation."). Therefore, the lower courts use of the precedential and more reasoned standard was correct.

The courts below employed the correct standard to determine that this case is not exceptional in accordance with reason and the law, and the Court should not grant Octane's petition to review those determinations.

II. The Court should deny the petition because it asks for expansion of the statute providing for fee awards in patent cases, which is a matter for Congress, not an issue for this Court.

In its petition, Octane asks that the Court permit consideration of the public policy for suppressing the American Rule in patent cases and to consider allowing attorney fees awards in cases against patent holders with an "objectively low likelihood of success" on the merits in addition to those cases traditionally considered "exceptional." (Pet. 33.) But this Court does not normally engage in the process of making policy judgments and should not elect to do so in this case especially because the expansion requested by Octane is neither in accordance with the current statute nor current congressional consideration of fee awards in patent cases.

Octane unabashedly requests that the Court supplant Congress and do that which Congress chose not to. (Pet. 17.)

Just this last year, in reference to itself, the Court stated that "[m]embers of this Court are vested with the authority to interpret the law; we possess neither the expertise nor the prerogative to make policy judgments. Those decisions are entrusted to our Nation's elected leaders. . . ." *Nat'l Fed'n of Indep. Bus. v. Sebelius*, 132 S.Ct. 2566, 2579-80, 183 L. Ed. 2d 450 (2012). Thus, if Congress wishes to expand the pool of patent cases in which attorney

fees are awarded, it may do so through its own legislative efforts. In fact, Congress is considering – but has not passed – a bill directed toward expanding attorney fee awards in certain circumstances. But those circumstances are inapplicable to the case between ICON and Octane, and the Court should not consider superseding Congress on the issue.

Repeatedly, this Court declines invitations by parties such as Octane to rewrite congressional statutes. *See Lewis v. City of Chicago, Ill.*, 560 U.S. 205, 130 S.Ct. 2191, 2200, 176 L. Ed. 2d 967 (2010) ("It is not for us to rewrite the statute so that it covers only what we think is necessary to achieve what we think Congress really intended."); *Lamie v. U.S. Tr.*, 540 U.S. 526, 538, 124 S.Ct. 1023, 1032, 157 L. Ed. 2d 1024 (2004); *United States v. Locke*, 471 U.S. 84, 95, 105 S.Ct. 1785, 1793, 85 L. Ed. 2d 64 (1985); *Mobil Oil Corp. v. Higginbotham*, 436 U.S. 618, 625, 98 S.Ct. 2010, 56 L. Ed. 2d 581 (1978) ("There is a basic difference between filling a gap left by Congress' silence and rewriting rules that Congress has affirmatively and specifically enacted."). Thus, if statutes need revision, it is up to Congress to revise them. And, currently, Congress is considering revision of the statutes providing for attorney fee awards in patent cases such that the Court should not grant the petition and supplant Congress' efforts.

On August 1, 2012, H.R. 6245 was introduced before Congress. H.R. 6245, 112th Cong. (2d Sess. 2012) ("SHIELD Act I"). SHIELD Act I proposed augmenting 35 U.S.C. § 285 to include recovery of

attorney fees and costs in the absence of an exceptional case. Specifically, SHIELD Act I proposed adding section 285A after section 285 as follows:

> Notwithstanding section 285, in an action disputing the validity or alleging the infringement of a computer hardware or software patent, upon making a determination that the party alleging the infringement of the patent did not have a reasonable likelihood of succeeding, the court may award the recovery of full costs to the prevailing party, including reasonable attorney's fees. . . .

However, the SHIELD Act I was not voted into law by Congress.

Subsequently, SHIELD Act I was extensively rewritten and introduced to Congress on February 27, 2013 as H.R. 845. H.R. 845, 113th Cong. (1st Sess. 2012) ("SHIELD Act II"). SHIELD Act II proposes recovery of attorney fees by prevailing defendants when a patent infringement case is brought by a plaintiff other than the inventor, the original assignee, an entity invested in the patent other than for litigation, or a university or technology transfer office. *Id.* at 4. SHIELD Act II is currently being considered by congressional committee and has yet to be passed into law by Congress.

Notably, SHIELD Act II removed the contemplated provision of SHIELD Act I that would have allowed for an award of attorney fees in the absence of a "reasonable likelihood of success" by the plaintiff.

Thus, if Octane's petition were granted, the policy that Octane would ask this Court to consider – namely, the award of attorney fees in cases by patent holders with an "objectively low likelihood of success" – has already been under consideration but not passed into law by Congress. Rather than asking courts to weigh the merits of a case before awarding fees, Congress is now considering fee awards in cases brought by plaintiffs that had no hand in inventing asserted patented technology (e.g., "patent trolls"). *See id.*

SHIELD Act II makes clear that Congress is not considering expansion of attorney fee awards to cover patent cases between competitors such as ICON and Octane. ICON is the original assignee of the '710 patent, which was invented by ICON employees. (CA App. A87.) ICON has every right to exclude others from making, using, selling, or importing products that infringe the '710 patent. And, if it were enacted, SHIELD Act II still would not provide an award of attorney fees to Octane. *See* SHIELD Act II, pp. 2, 4, at § 285A(a)(4), (d)(1) (excluding fee award to a prevailing defendant if the plaintiff is the inventor or original assignee).[5]

Therefore, this Court should not grant Octane's petition, which would result in the Court considering public policy, improper judicial expansion of statute,

---

[5] SHIELD Act II would also not apply retroactively. SHIELD Act II at 5.

and the award of attorney fees in a case not in line with current congressional intent.

III. The decision below that this is not an exceptional case is a fact-bound application of law that was correctly decided.

This Court should deny Octane's petition because both courts below rejected Octane's version of the facts in determining that this case is not exceptional. Consideration of Octane's question would require a factually intensive review of Octane's twice-rejected story.

In its petition, Octane retells its fictitious story that this is an exceptional case. In it, Octane again demonizes ICON as an "industry giant" seeking "to extract royalties" from "a smaller competitor," based on an "old patent" that is asserted to be "commercially unviable."

In addition to being misleading, most of Octane's assertions have no relevancy in fact or law to patent infringement or to the determination of an exceptional case. For example, the relative size of the parties is irrelevant to patent infringement because a duly granted patent is a grant of the right to exclude all infringers, not just those of comparable size. *See Brooks Furniture*, 393 F.3d at 1384 (citing *United States v. United States Steel Corp.*, 251 U.S. 417, 451, 40 S.Ct. 293, 64 L. Ed. 343 (1920) ("the law does not make mere size an offense")). Moreover, whether or not ICON manufactured a product covered by the

'710 patent is irrelevant because patents are not the right to manufacture or use an invention but rather the right to exclude others from doing so. *See Brooks Furniture*, 393 F.3d at 1384 ("Patent rights are useful only if they can legally exclude others from the patented subject matter.").

Octane again attempts to present this case as exceptional based on its own position against the merits of ICON's case. It asserts that ICON was "manifestly unreasonable" in assessing and continuing to assert infringement. But the district court found that ICON's case was not "unreasonable" or "objectively baseless," and the Federal Circuit affirmed those findings after review of the record. (CA App. A52-54.)

In a possible attempt to distance its arguments from the findings of the district court, Octane repeatedly calls ICON's case "spurious" instead of "baseless." A thesaurus may change the words used by Octane, but the facts and findings that ICON's case was not unreasonable, objectively baseless, or exceptional – i.e., not spurious – will not change. *See generally* Black's Law Dictionary 1402 (6th ed. 1990) ("Spurious. False, counterfeit, not genuine.").

Lastly, Octane again displays emails in its petition that are supposed evidence of ICON's bad faith. When Octane's selective presentation of evidence has been reviewed in light of all the relevant facts and circumstances, it has been found and affirmed to be nothing more than supposition. (*See* App. to Pet. Cert

17a, 25a-28a.) For example, with respect to the emails, the district court specifically found that, even when viewed "*in the light most favorable to Octane*, these remarks are stray comments by employees with no demonstrated connection to the lawsuit" and that the statements "do not reflect advice to Icon by its counsel or experts, nor are they evidence of Icon's official position on the merits of the lawsuit." (App. to Pet. Cert 27a (emphasis added).)

Even if the comments in the emails could be imputed to ICON, none of the emails discloses any state of mind with respect to ICON's substantive position. In order for there to be "bad faith," the "plaintiff must actually know" that its case has "no objective foundation." *iLOR*, 631 F.3d at 1377. There is nothing improper about "throwing a lawsuit" on top of a competitive product offering (or filing suit without introducing a competing product, for that matter), or "looking for royalties" from an "old patent . . . that was sitting on the shelf" when there is a reasonable basis for believing that the patent is infringed. *Brooks Furniture*, 393 F.3d at 1384 ("[E]nforcement of patent rights that are reasonably believed to be infringed does not entail special penalty when the patentee is unsuccessful."); *id.* ("Infringement is often difficult to determine, and a patentee's ultimately incorrect view of how a court will find does not of itself establish bad faith."). The court concluded that ICON had a reasonable basis for asserting its patent, and Octane has no evidence that ICON believed otherwise.

Octane presents no substantial reason why the lower court's conclusions with respect to the merits of

ICON's case were incorrect or why the district court's findings regarding ICON's intent in bringing suit were "clearly erroneous." *Checkpoint Sys., Inc. v. All-Tag Sec. S.A.*, 711 F.3d 1341, 1346 (Fed. Cir. 2013) ("On appellate review of an attorney fee ruling this court determines de novo whether the litigation was objectively baseless, [citation omitted], and the district court's findings regarding subjective bad faith are reviewed for clear error. [citation omitted]."). Indeed, the Federal Circuit has conducted a de novo review and determined that no fee award should be made. *Id.* (App. to Pet. Cert 17a.) The Court should not undertake a review of this case when there is no significant reason to doubt the accuracy of the lower courts' determinations.

IV. The petition should be denied because it asks the Court to decide an issue that was not considered or reviewed by either lower court.

The Court should deny Octane's petition because it seeks review of an issue and argument that Octane failed to present to the lower courts. As such Octane's petition does not ask this Court to "review" anything but rather to consider expansion of attorney fee awards in patent cases based on a standard presented here by Octane for the first time.

At the district court, Octane vehemently argued that ICON's case was baseless and brought in bad faith, but the district court did not find Octane's arguments persuasive. Importantly, Octane did not argue

that the standards promulgated for the determination of exceptional cases was too stringent or that they were in need of judicial revision. (CA App. A2619-41.) Accordingly the district court made no determination related to the stringency or propriety of the standards for exceptional cases. (App. to Pet. Cert 19a-28a.)

At the Federal Circuit, Octane again fervently argued that ICON's case was baseless and brought in bad faith, but, after review, the Federal Circuit affirmed the district court's findings that ICON's case was not baseless or brought in bad faith. (App. to Pet. Cert 17a.)

Octane also argued – for the first time at the Federal Circuit – that the pool of exceptional cases should be enlarged to include those cases that may be objectively baseless but that were nevertheless brought in good faith. The Federal Circuit declined Octane's invitation to expand the pool of exceptional cases to allow additional attorney fee awards in patent cases. (App. to Pet. Cert 17a).

Octane did not present either court below with its argument that exceptional cases should include those that have an "objectively low likelihood of success on the merits." (CA App. A2619-41.) Therefore, neither the district court nor the Federal Circuit have considered the standard that Octane would present to this Court should its petition be granted.

Because the argument appears for the first time in this Court, without the benefit of adversarial presentation or decision, it would be inappropriate for

the Court to "review" it. *See United States v. United Foods, Inc.*, 533 U.S. 405, 416-17 (2001) ("The Government's failure to raise its argument in the Court of Appeals deprived respondent of the ability to address significant matters that might have been difficult points for the Government.").

Because Octane failed to present and preserve its current issue and arguments in the lower courts, ICON has not had the opportunity to show the reasons why Octane's argument is at odds with policy and well-established law. Rather, here, ICON only presents argument why this Court should not hear the issue without the benefit of prior adversarial proceedings and decisions along with the other reasons for denying a writ of certiorari.

CONCLUSION

The petition should be denied.

Respectfully submitted,

LARRY R. LAYCOCK
Counsel of Record
DAVID R. WRIGHT
JARED J. BRAITHWAITE
MASCHOFF BRENNAN LAYCOCK
GILMORE ISRAELSEN & WRIGHT
201 S. Main Street, Suite 600
Salt Lake City, Utah 84111
(435) 252-1360
llaycock@maschoffbrennan.com

May 29, 2013

REPLY BRIEF

RECORD AND BRIEFS

No. 12-1184

Supreme Court, U.S.
FILED
JUN 6 - 2013
OFFICE OF THE CLERK

IN THE

Supreme Court of the United States

OCTANE FITNESS, LLC,

Petitioner,

v.

ICON HEALTH & FITNESS, INC.,

Respondent.

ON PETITION FOR A WRIT OF CERTIORARI TO THE UNITED STATES COURT OF APPEALS FOR THE FEDERAL CIRCUIT

REPLY BRIEF

RUDOLPH A. TELSCHER, JR.,
Counsel of Record
KARA R. FUSSNER
HARNESS, DICKEY & PIERCE, PLC
7700 Bonhomme Avenue,
Suite 400
St. Louis, MO 63105
(314) 726-7500
rtelscher@hdp.com

Attorneys for Petitioner,
Octane Fitness, LLC

247769

COUNSEL PRESS
(800) 274-3321 • (800) 359-6859

Library of Congress
Law Library

PARTIES TO THE PROCEEDING

The Plaintiff below is Icon Health & Fitness, Inc. ("Icon").

The Defendant-below/Petitioner is Octane Fitness, LLC ("Octane").

CORPORATE DISCLOSURE STATEMENT

Octane is wholly owned by OF Holdings, Inc.

TABLE OF CONTENTS

Page

PARTIES TO THE PROCEEDING i

CORPORATE DISCLOSURE STATEMENT ii

TABLE OF CONTENTS iii

TABLE OF CITED AUTHORITIES iv

INTRODUCTION 1

ARGUMENT 2

I. The Decision Below Conflicts with *Fogerty*. 2

II. The Exceptional Case Standard Conflicts with the Standard Adopted by other Circuits Interpreting an Identical Provision of the Lanham Act. 4

III. The Issue Was Properly Raised Below. 5

IV. Respondent's Remaining Arguments, Though Incorrect, Are Irrelevant. 7

A. The Question Presented Is Legal, Not Fact-Bound. 7

B. Decision in Octane's Favor Would Not "Supplant" Congress' Legislative Role. 9

CONCLUSION 11

TABLE OF CITED AUTHORITIES

Page

CASES

Armstrong Paint & Varnish Works v. Nu-Enamel Corp., 305 U.S. 315 (1938) 9

Door Sys., Inc. v. Pro-Line Door Sys., Inc., 126 F.3d 1028 (7th Cir. 1997) 4

Fogerty v. Fantasy, Inc., 510 U.S. 517 (1994) 1, 2

Hartman v. Hallmark Cards, Inc., 833 F.2d 117 (8th Cir. 1987) 4

Highmark, Inc. v. Allcare Health Mgmt. Sys., Inc., 687 F.3d 1300 (Fed. Cir. 2012) 3

iLOR, LLC v. Google, Inc., 631 F.3d 1372 (Fed. Cir. 2011) 3

In re Seagate Tech., 497 F.3d 1360 (Fed. Cir. 2007) 3

Lebron v. National R.R. Passenger Corp., 513 U.S. 374 (1995) 6

MedImmune, Inc. v. Genentech, Inc., 549 U.S. 118 (2007) 5

Cited Authorities

Page

National Ass'n of Professional Baseball Leagues, Inc. v. Very Minor Leagues, Inc., 223 F. 3d 1143 (10th Cir. 2000) 4

Nelson v. Adams USC, Inc., 529 U.S. 460 (2000).....6

Noxell Corp. v. Firehouse No. 1 Bar-B-Que Restaurant, 771 F.2d 521 (D.C. Cir. 1985) 4

Securacomm Consulting, Inc. v. Securacom Inc., 224 F.3d 273 (3d Cir. 2000) 4

Stephen W. Boney, Inc. v. Boney Services, Inc., 127 F.3d 821 (9th Cir. 1997) 4

Tamko Roofing Products, Inc. v. Ideal Roofing Co., 282 F.3d 23 (1st Cir. 2002).....4

United States v. United Foods, Inc., 533 U.S. 405 (2001).....6, 7

Yee v. Escondido, 503 U.S. 519 (1992).....6

STATUTES

15 U.S.C. § 1117 4

35 U.S.C. § 284.....3

Cited Authorities

Page

35 U.S.C. § 285 ..... 1, 3, 7, 10

RULES

Fed. R. Civ. P. 11 1

S. Ct. R. 15.2 8

OTHER AUTHORITIES

J. Allison *et al.*, *Patent Quality and Settlement Among Repeat Patent Litigants*, 99 Geo. L. J. 677 (2011) 11

C. Chien, *Patent Trolls by the Numbers*, Patently-O, Mar. 14, 2013 11

Randall R. Rader, *et al.*, Op-Ed., *Make Patent Trolls Pay in Court*, N.Y. Times, June 4, 2013 1

Octane Br., 2012 WL 481412 (Fed. Cir. Jan 27, 2012) 5, 6

Octane Reply Br., 2012 WL 1943711 (Fed. Cir. May 3, 2012) 8

SHIELD Act I 9, 10

SHIELD Act II, S.1013 ..... 9, 10

INTRODUCTION

The most compelling reasons to grant *certiorari* are left, in most all respects, unaddressed by the Respondent. First, the Federal Circuit's current exceptional case standard is squarely in conflict with this Court's holding in *Fogerty v. Fantasy, Inc.*, 510 U.S. 517 (1994), *see* Pet. 30, a case which Respondent does not even cite, much less discuss. *Fogerty* mandates that plaintiffs and defendants be treated alike under an analogous fee-shifting provision in the Copyright Act. Respondent claims an even-handed approach by the Federal Circuit here, but neither the differing language used by the Federal Circuit, nor the disparate fee awards between plaintiffs and defendants, support its assertion. Second, other circuits have interpreted *identical* language in the Lanham Act in a manner that conflicts with the Federal Circuit's interpretation here. *See* Pet. 36. Respondent does not address this conflict at all, let alone contest it. Third, Respondent does not dispute that the Federal Circuit's fee-shifting standard in patent cases is essentially coterminous with the standard for Rule 11 sanctions, rendering section 285 of the Patent Act a nullity. Finally, Respondent does not dispute the ballooning cost of patent litigation, the high incidence of meritless suits designed to extort licensing fees, or the salutary effect that section 285—properly interpreted—could have on combatting these trends, a point made earlier this week in an editorial piece in the New York Times. Randall R. Rader, *et al.*, Op-Ed., *Make Patent Trolls Pay in Court*, N.Y. Times, June 4, 2013, at A25. In short, this case has all the ingredients of a successful petition for *certiorari*.

Without any substantial challenge to the cert-worthiness of this case, Respondent resorts to inaccuracies and red herrings that only distract from the real issues. Respondent tries to label the dispute "fact-bound," when, in fact, the question presented is legal: whether the Federal Circuit's exceptional case standard is a proper interpretation of the Patent Act. And Respondent puzzlingly claims that this issue was not raised below, when it was clearly presented to and rejected by the Federal Circuit, and then presented again in an *en banc* petition. The rest of Respondent's arguments go to the merits, and therefore—inaccuracies and unpersuasiveness aside—have no bearing upon *certiorari*.

ARGUMENT

I. The Decision Below Conflicts with *Fogerty*.

In *Fogerty v. Fantasy, Inc.*, this Court held that "[p]revailing plaintiffs and prevailing defendants are to be treated alike" for purposes of fee awards under the Copyright Act. 510 U.S. at 534. The Court rejected a "dual standard" that had treated plaintiffs more favorably. In so holding, the Court specifically noted that "*federal fee-shifting statutes in the patent* and trademark fields ... support a *party-neutral* approach." *Id.* at 525 n.12. The Federal Circuit's decision to treat plaintiffs more favorably defies this Court's decision in *Fogerty*, and must be reversed.

Icon counters that the Federal Circuit's standard "is the same for patent plaintiffs and defendants" and that it is Octane's proposed interpretation that would expand the statute for prevailing defendants if bad faith were removed. Opp. 17. That is wrong. A prevailing

plaintiff can recover attorneys' fees if it can show willful infringement—that the defendant was or should have been aware of an ***objectively high likelihood*** that the plaintiff would prevail. *In re Seagate Tech.*, 497 F.3d 1360, 1371 (Fed. Cir. 2007) (*en banc*). By contrast, a prevailing *defendant* must show that a plaintiff "actually kn[e]w" that its case had "***no objective foundation***." *iLOR, LLC v. Google, Inc.*, 631 F.3d 1372, 1377 (Fed. Cir. 2011); *see* Pet. App. 25a. While at times the Federal Circuit has described the subjective prong consistent with that used in the context of willful infringement, *see Highmark*, 687 F.3d 1300, 1309 (Fed. Cir. 2012) (citing *Seagate* for the same subjective standard), the second prong of the test is neither articulated nor applied on an even-handed basis. A plaintiff knowing, actually or recklessly, that its case has "no objective foundation" (a situation that would invoke Rule 11), is *not* the reciprocal of a defendant knowing, actually or recklessly, that the plaintiff has a "high likelihood of success" of showing infringement. And the disparity is borne out by the statistics: prevailing plaintiffs are *twice* as likely to win attorneys' fees as prevailing defendants. Pet. 30.

Further, patentees must prove at least objective recklessness for a finding of *willful infringement*, but willful infringement is only one way to make a case "exceptional." Courts should be able to look to the "totality of the circumstances" in the case of a prevailing patentee, just like Octane proposes for a prevailing defendant. Of course, if a prevailing patentee can also prove an infringer's subjective bad faith, it may then be entitled to treble damages under 35 U.S.C. § 284, *in addition* to an award of attorneys' fees under 35 U.S.C. § 285, as a punitive remedy. But an award of attorneys' fees is separate.

II. The Exceptional Case Standard Conflicts with the Standard Adopted by other Circuits Interpreting an Identical Provision of the Lanham Act.

Just like the Patent Act, the Lanham Act provides that a "court in exceptional cases may award reasonable attorney fees to the prevailing party." 15 U.S.C. § 1117. Several circuits have interpreted this provision in a manner that is *inconsistent* with the Federal Circuit's interpretation of identical language in the Patent Act. For example, the Seventh Circuit has held that "bad faith is not the correct standard for determining whether to award attorneys' fees to the defendant in a Lanham Act case." *Door Sys., Inc. v. Pro-Line Door Sys., Inc.*,126 F.3d 1028, 1031 (7th Cir. 1997). "[A] suit can be oppressive because of lack of merit and cost of defending even though the plaintiff honestly though mistakenly believes that he has a good case and is not trying merely to extract a settlement based on the suit's nuisance value." *Id.* at 1032. The Eighth Circuit has similarly held that "[b]ad faith is not a prerequisite to a Lanham Act fee award." *Hartman v. Hallmark Cards, Inc.*, 833 F.2d 117, 123 (8th Cir. 1987) (citation omitted), and a number of other circuits agree, *Tamko Roofing Products, Inc. v. Ideal Roofing Co.*, 282 F.3d 23, 32 (1st Cir. 2002); *Securacomm Consulting, Inc. v. Securacom Inc.*, 224 F.3d 273, 280 (3d Cir. 2000); *National Ass'n of Professional Baseball Leagues, Inc. v. Very Minor Leagues, Inc.*, 223 F. 3d 1143, 1147 (10th Cir. 2000); *Stephen W. Boney, Inc. v. Boney Services, Inc.*, 127 F.3d 821, 827 (9th Cir. 1997); *Noxell Corp. v. Firehouse No. 1 Bar-B-Que Restaurant*, 771 F.2d 521, 526 (D.C. Cir. 1985). Thus, there is a clear circuit split on the proper standard for fee awards under the Patent Act and Lanham Act, a split neither intended by the Legislature nor practical in its application, (particularly in cases where both causes of

action are presented in the Federal Circuit). *Certiorari* is appropriately granted to resolve this conflict.

III. The Issue Was Properly Raised Below.

Respondent contends that this Court should deny the petition because Octane's arguments were not presented to the lower courts. That is demonstrably untrue. In the Federal Circuit, Octane specifically advocated for reconsideration of the Federal Circuit's interpretation of the exceptional case standard. It dedicated an entire section of its opening appeal brief to the argument that "Abuses in Patent Litigation Counsel for Reconsideration of the Judicially Created Standards for Determining Exceptional Case Status for Prevailing Alleged Infringers." *See* Octane Br., 2012 WL 481412, at 67-80 (Fed. Cir. Jan 27, 2012). In that 12-page section, Octane asked for reconsideration of the Federal Circuit's two-part objectively baseless/subjective bad faith test, in favor of an interpretation that would allow discretion to award fees where patentees proceeded unreasonably, without the need for a separate showing of subjective bad faith. Octane then petitioned for *en banc* review of that same issue. That was more than enough to preserve the argument for review. *See MedImmune, Inc. v. Genentech, Inc.*, 549 U.S. 118, 125 (2007).

Icon's assertion that the argument was not raised below, appears to center on Octane's specific use of the words "low likelihood of success" in its briefing to this Court versus its prior use of words like "objectively unreasonable" to describe what should qualify as an "exceptional case." But the basic point—made both below and in the petition—is that the "exceptional case" statute, while certainly not entitling every prevailing defendant

to fees, should not require a showing of baselessness on par with a Rule 11 violation (the Federal Circuit's current articulation), and it should not require proof of subjective bad faith (the second prong of the Federal Circuit's test derived from this Court's ruling in the *PRE* case). *See, e.g.*, Octane Fed Cir. Br., 2012 WL 481412, at 74-76, 77-80. Instead, and consistent with the legislative intent and this Court's precedent, district courts should have discretion to award fees to prevailing accused infringers on par with prevailing patentees: when the defendant shows that the patentee proceeded with a case unreasonably or in the face of a "low likelihood of success," that should be sufficient to deem a case exceptional.

Thus the exact issue presented here was raised below. And even if the specific formulation of the standard now advocated here was not proposed below (though its substance was), that does not make review now improper: The "traditional rule is that once a federal claim is properly presented, a party can make any argument in support of that claim; parties are not limited to the precise arguments they made below." *Lebron v. National R.R. Passenger Corp.*, 513 U.S. 374, 379 (1995) (*quoting Yee v. Escondido*, 503 U.S. 519, 534 (1992) (internal quotations omitted)). The principle that an issue must be raised in the lower court in order to be preserved as potential grounds of decision in higher courts "does not demand the incantation of particular words; rather, it requires that the lower court be fairly put on notice as to the substance of the issue." *Nelson v. Adams USC, Inc.* 529 U.S. 460, 469 (2000).

The sole case Icon cites does not hold otherwise. In *United States v. United Foods, Inc.*, 533 U.S. 405 (2001),

the Government, for the first time in its brief on the merits to this Court, argued that the advertisements at issue constituted "government speech" immune from the level of scrutiny that would otherwise apply. Its failure to make this argument in the lower court deprived the respondent and the lower court of the ability to address factual matters about the program which would bear on its categorization as "government speech." *Id.* at 416-17.

Here, Octane is not raising new issues. It is asking this Court to consider whether or not the Federal Circuit's rigid two-part test for labeling a case "exceptional" for a prevailing accused infringer is in accord with the statute, legislative intent and case precedent. This was the issue presented to the Federal Circuit, and the Federal Circuit decided "[w]e have no reason to revisit the settled standard for exceptionality." Pet. App. 17a. While Octane may have refined the *wording* of the proposed standard for when a case is "exceptional" under section 285 to harmonize it with legislative intent and this Court's precedent (i.e., "objectively unreasonable" or "low likelihood of success"), the issue has remained the same—the standard for an award of attorneys' fees under section 285. That issue is properly presented here.

IV. Respondent's Remaining Arguments, Though Incorrect, Are Irrelevant.

A. The Question Presented Is Legal, Not Fact-Bound.

Much of Icon's brief is devoted to arguing about how the facts of this case allegedly fail to establish Icon's subjective bad faith. This misses the point. The relevant

question is not whether Icon engaged in bad faith, but, instead, whether clear and convincing evidence of subjective bad faith should be a *requirement* for proving an exceptional case for an award of fees. As set forth above and in Octane's opening brief, it should not.

Both the district court and the Federal Circuit found that Octane's accused elliptical machines do not infringe the claims of the '710 patent as a matter of law. Octane provided some background facts merely to highlight the rigid nature of the Federal Circuit's test and the difficulty of securing fees for a prevailing accused infringer, even when, as here, a party enforces a patent that it had sitting on the shelf, that was not commercially viable, and against a competitor with award-winning products utilizing a design licensed under different and pre-dating technology.

Although Icon calls these facts "extraneous" and argues the claim language controls, Icon does not, in its entire brief in opposition, reference the '710 patent's claim language or discuss how the accused products could reasonably have been said to infringe those claims (because the allegation was groundless from the get-go).[1] Indeed, because Icon does not even dispute that its claim had an objectively low likelihood of success, this Court can regard that point as conceded for purposes of the petition. *See* S. Ct. R. 15.2. In any event, if this Court grants the petition, it need only clarify the proper standard for an

1. Instead, Icon argues that damning emails in the record were allegedly written by a Vice President of "Free Motion Fitness", not "Icon." While irrelevant to the *certiorari* petition, this assertion is also incorrect. The record below reflecting this executive's status as an *Icon* witness is found at Octane Br., 2012 WL 1943711, at 21-22 (Fed. Cir. May 3, 2012).

exceptional case finding. If it feels there are factual issues relating to the application of that standard best left to the trial court in the first instance, it can remand for reconsideration in light of the corrected standard. That does not make the dispute "fact-bound."

B. Decision in Octane's Favor Would Not "Supplant" Congress' Legislative Role.

Respondent urges that a decision in Octane's favor would be a "legislative" act. It would not: Octane merely asks the Court to interpret the meaning of a phrase in the Patent Act. The Federal Circuit has misconstrued the meaning of an "exceptional case"; if this Court intervenes to correct that misconstruction, it will restore the law that Congress actually passed. That is at the heart of the judicial function. *See Armstrong Paint & Varnish Works v. Nu-Enamel Corp.*, 305 U.S. 315, 332-33 (1938).

The pendency of the SHIELD Act (I or II) also has no bearing on the cert-worthiness of this case. For starters, the bill is at a very preliminary stage: it has been referred to a House committee, which has not even voted on it. Further, the bills under consideration do not contemplate revision of the statute at issue here. Instead, they seek to address the perceived problems of "non-practicing entities" ("NPEs"), also known as patent trolls, and overly-broad computer-related patents. But NPEs are not the only entities to unscrupulously assert patents (as aptly illustrated here), and proper interpretation of the existing fee standard remains an important part of the equation for curbing abuse.

In any event, the proposed SHIELD Act II goes much further than anything Octane has advocated here. The proposed SHIELD Act II provides for the award of attorney fees, in a lawsuit brought by an NPE (with some exceptions), to the prevailing party ***unless*** the non-prevailing party's "position and conduct ... were objectively reasonable and substantially justified" or where the exceptional circumstances make the award unjust.[2] SHIELD Act II, S.1013.

A presumption of an award of fees to the prevailing party is *not* the standard advocated by Octane here. Octane does not propose a presumption for fees. Rather, Octane contends that the standard articulated by the Federal Circuit, beginning with *Brooks Furniture*, has strayed from the statutory language and intent of Congress for an award of fees in "exceptional cases"; it is not consistent with this and other courts' interpretation of the same statutory language in analogous fields (*i.e.*, Copyright and trademark law); and, contrary to Icon's assertions, it does not treat prevailing plaintiffs and prevailing defendants the same.

---

2. Contrary to Respondent's suggestion, *see* Opp. 20-22, amendments to SHIELD Act I's fee provision in no way constitutes a rejection of Octane's proposal here for interpretation of section 285. Congress ***expanded*** the availability of fees in a party-neutral way and, if anything, reflects Congress' endorsement of an interpretation that prevents abuse in patent litigation. In any event, to the extent relevant at all, this is a merits argument, which the Court can address if it decides to grant *certiorari*; it is not a reason for denying review.

CONCLUSION

The Federal Circuit's present exceptional case standard is inconsistent with this Court's precedents, inconsistent with cases from other circuits, and wrong as a matter of statutory construction. It is also hugely important: the cost of patent litigation is skyrocketing. Pet. 24-25. According to the New York Times, Apple and Google, two of the world's top innovators, now spend more on patents and patent litigation than research and development.[3] While part of this increase stems from the rise in meritless NPE litigation,[4] patent abuse extends beyond the realm of NPEs. As exemplified here, because the Federal Circuit has made it virtually impossible for successful defendants to recover attorneys' fees both NPE's and others can assert weak patent claims to extract royalties and/or harm smaller competitors, without fear of having to pay fees to compensate the defendant in any way. This Court's intervention is sorely needed.

---

3. http://www.nytimes.com/2012/10/08/technology/patent-wars-among-tech-giants-can-stifle-competition.html.

4. Litigation by NPEs has increased from 19% in 2006, to over 60% today. C. Chien, *Patent Trolls by the Numbers*, Patently-O, Mar. 14, 2013. And suits filed by NPEs have a startlingly low success rate: Such entities win only 8% of the time when the suit is actually litigated to judgment (a rare occurrence), compared with a 40% success rate for companies that actually practice their patents. J. Allison et al., *Patent Quality and Settlement Among Repeat Patent Litigants*, 99 Geo. L. J. 677, 693-694 (2011).

For the foregoing reasons, and the reasons stated in the petition, Octane Fitness, LLC respectfully requests that the Court grant the petition.

Respectfully submitted,

RUDOLPH A. TELSCHER, JR.,
Counsel of Record
KARA R. FUSSNER
HARNESS, DICKEY & PIERCE, PLC
7700 Bonhomme Avenue,
Suite 400
St. Louis, MO 63105
(314) 726-7500
rtelscher@hdp.com

Attorneys for Petitioner,
Octane Fitness, LLC

June 6, 2013

JOINT APPENDIX

RECORD
AND
BRIEF

REDACTED
PUBLIC VERSION

No. 12-1184

IN THE

Supreme Court of the United States

FILED
DEC 2 - 2013
OFFICE OF THE CLERK

OCTANE FITNESS, LLC,

Petitioner,

v.

ICON HEALTH & FITNESS, INC.,

Respondent.

ON WRIT OF CERTIORARI TO THE
UNITED STATES COURT OF APPEALS
FOR THE FEDERAL CIRCUIT

JOINT APPENDIX

LARRY R. LAYCOCK
Counsel of Record
MASCHOFF BRENNAN LAYCOCK
GILMORE ISRAELSEN & WRIGHT
201 S. Main Street
Suite 600
Salt Lake City, UT 84111
(435) 252-1360
llaycock@maschoffbrennan.com

CARTER G. PHILLIPS
SIDLEY AUSTIN, LLP
1501 K Street N.W.
Washington, DC 20005

Attorneys for Respondent

RUDOLPH A. TELSCHER, JR.
Counsel of Record
HARNESS, DICKEY &
PIERCE, PLC
7700 Bonhomme Avenue
Suite 400
St. Louis, MO 63105
(314) 726-7500
rtelscher@hdp.com

Attorneys for Petitioner

Library of Congress
Law Library

PETITION FOR CERTIORARI FILED MARCH 27, 2013
CERTIORARI GRANTED OCTOBER 1, 2013

249900

TABLE OF APPENDICES

Page

APPENDIX A - RELEVANT DOCKET ENTRIES 1a

APPENDIX B — COMPLAINT IN THE UNITED STATES DISTRICT COURT CENTRAL DISTRICT OF CALIFORNIA SOUTHERN DIVISION, DATED APRIL 22, 2008 ..... 40a

APPENDIX C - CIVIL MINUTES OF IN CHAMBERS ORDER BY JUDGE CORMAC J. CARNEY: GRANTING MOTIONS TO SEVER AND TRANSFER 50a

APPENDIX D - CIVIL MINUTES OF IN CHAMBERS ORDER BY JUDGE CORMAC J. CARNEY: DISMISSING CASE 58a

APPENDIX E - STIPULATION FOR DISMISSAL OF ALL CLAIMS RELATING TO U.S. PATENT NO. 5,104,120 ..... 60a

APPENDIX F DEFENDANT OCTANE FITNESS' PROPOSED CLAIM CONSTRUCTIONS, DATED SEPTEMBER 14, 2009 ..... 63a

APPENDIX G - ICON'S SUPPLEMENTAL CLAIM CHART, DATED OCTOBER 23, 2009 ..... 79a

Table of Appendices

Page

APPENDIX H - EXCERPTS FROM J. RASTY DEPOSITION, DATED MAY 4, 2010 ..... 93a

APPENDIX I - EXCERPTS FROM W. DALEBOUT DEPOSITION, DATED DECEMBER 4, 2009 [REDACTED] 100a

APPENDIX J - EXCERPTS FROM T. PORTH DEPOSITION, DATED JANUARY 18, 2010 ..... 109a

APPENDIX K - EXCERPTS FROM P. MCGINNIS DEPOSITION, DATED JANUARY 21, 2010 ..... 115a

APPENDIX L - EXCERPTS FROM L. GUNDERSON DEPOSITION, DATED APRIL 28, 2010 ..... 117a

APPENDIX M - PTO NOTICE OF ALLOWANCE FOR U.S. PATENT NO. 6,019,710 ..... 118a

APPENDIX N - EXPERT REPORT OF JAHAN RASTY, PH.D., DATED MARCH 1, 2010 ..... 124a

APPENDIX O - DEFENDANT OCTANE FITNESS' CLAIM CHART, DATED AUGUST 26, 2009 ..... 169a

Table of Appendices

Page

APPENDIX P - ICON'S OPPOSITION TO MOTION FOR SUMMARY JUDGMENT OF NON-INFRINGEMENT, DATED MARCH 8, 2011 [REDACTED]. 191a

APPENDIX Q - OCTANE'S MEMORANDUM IN SUPPORT OF ITS MOTION FOR ATTORNEY FEES AND COSTS, DATED JULY 18, 2011 [REDACTED]. 250a

APPENDIX R - ICON'S MEMORANDUM IN OPPOSITION TO OCTANE'S MOTION FOR ATTORNEY FEES AND COSTS, DATED AUGUST 4, 2011 . . . . . 276a

APPENDIX S - OCTANE FITNESS' SUPPLEMENTAL PROPOSED CLAIM CONSTRUCTIONS, DATED JUNE 1, 2010 . . . . . 303a

APPENDIX T ADDENDUM TO EXPERT REPORT OF DR. JOHAN RASTY, PH.D., DATED JULY 1, 2010 . . . . . 320a

APPENDIX U - EXCERPTS FROM DEPOSITION OF TIMOTHY J. PORTH, DATED JANUARY 18, 2010 . . . . . 325a

APPENDIX V - OCTANE'S SUPPLEMENTAL PRIOR ART STATEMENT, DATED MARCH 1, 2010 . . . . . 341a

Table of Appendices

Page

APPENDIX W - EXCERPTS FROM P. MCGINNIS DEPOSITION CONTAINED IN FED. CIR. REPLY AT PP. 5-6. . . . . .389a

VIDEO SHOWING OCTANE'S MACHINES AND '710 PROTOTYPE . . . . . CD-ROM

PAGES (106a-107a, 195a, 209a, 213a, 214a, 234a, 246a, 247a & 261a) HAVE BEEN REDACTED DUE TO CONFIDENTIAL MATERIALS)

The following orders, judgments and memorandum opinions have not been reproduced in this Joint Appendix because they appear in the appendix of the Petition for a Writ of Certiorari on the following pages:

APPENDIX A — ORDER OF THE UNITED STATES COURT OF APPEALS FOR THE FEDERAL CIRCUIT, FILED JANUARY 7, 2013 . . . . . .1a

APPENDIX B — JUDGMENT OF THE UNITED STATES COURT OF APPEALS FOR THE FEDERAL CIRCUIT, FILED JANUARY 7, 2013 . . . . . .18a

APPENDIX C — MEMORANDUM OPINION AND ORDER OF THE UNITED STATES DISTRICT COURT, DISTRICT OF MINNESOTA, FILED SEPTEMBER 6, 2011 . . .19a

Table of Appendices

Page

APPENDIX D — JUDGMENT OF THE UNITED STATES DISTRICT COURT, DISTRICT OF MINNESOTA, FILED JULY 15, 2011 ..... 29a

APPENDIX E — MEMORANDUM OPINION AND ORDER OF THE UNITED STATES DISTRICT COURT, DISTRICT OF MINNESOTA, FILED JUNE 17, 2011 ..... 31a

APPENDIX F — MEMORANDUM OPINION AND ORDER OF THE UNITED STATES DISTRICT COURT, DISTRICT OF MINNESOTA, FILED DECEMBER 22, 2010 ... 62a

APPENDIX G — ORDER DENYING PETITION FOR REHEARING AND REHEARING *EN BANC* OF THE UNITED STATES COURT OF APPEALS FOR THE FEDERAL CIRCUIT, DATED DECEMBER 27, 2012 ..... 87a

APPENDIX A — RELEVANT DOCKET ENTRIES

UNITED STATES DISTRICT COURT FOR THE
CENTRAL DISTRICT OF CALIFORNIA
(SOUTHERN DIVISION - SANTA ANA)
CIVIL DOCKET CASE #: 8:08-cv-00437-CJC-RNB

ICON HEALTH & FITNESS INC.,
A DELAWARE CORPORATION,

Plaintiff,

v.

OCTANE FITNESS LLC,
A MINNESOTA LIMITED LIABILITY COMPANY,

Defendant,

and

NELLIE'S EXERCISE EQUIPMENT INC.,
A CALIFORNIA CORPORATION,

Defendant.

Date Filed	#	Docket Text
04/23/2008	1	COMPLAINT against defendants Octane Fitness LLC, Nellie's Exercise Equipment Inc.(Filing fee $ 350 paid) Jury Demand., filed by plaintiff Icon Health & Fitness Inc. (twdb) Additional attachment(s) added on 4/25/2008 (smi,). (Entered: 04/25/2008)

Appendix A

08/04/2008	10	ANSWER to Complaint - (Discovery) 1 *and Counterclaims Against Icon Health & Fitness, Inc.* filed by Defendant-Counterclaimant Octane Fitness LLC. (Attachments: # 1 Supplement Certification as to Interested Parties)(Plager, Mark) (Entered: 08/04/2008)
08/04/2008	11	ANSWER to Complaint - (Discovery) 1 *and Counterclaims Against Icon Health & Fitness, Inc.* filed by Defendant and Counterclaimant Nellie's Exercise Equipment Inc. (Attachments: # 1 Supplement Certification as to Interested Parties)(Plager, Mark) (Entered: 08/04/2008)
08/15/2008	20	ANSWER to Complaint - (Discovery) 1 with JURY DEMAND *Answer to Octane Fitness' Counterclaim, Docket Entry No. 10* filed by plaintiff Icon Health & Fitness Inc. (Wright, David) (Entered: 08/15/2008)
08/15/2008	21	ANSWER to Complaint - (Discovery) 1 *Answer to Defendant Nellie's Exercise Equipment's Counterclaim, Docket Entry No. 11* filed by plaintiff Icon Health & Fitness Inc. (Wright, David) (Entered: 08/15/2008)

Appendix A

10/10/2008	25	NOTICE OF MOTION AND MOTION to Sever defendants & *Transfer Venue Pursuant to 28 USC §1404(a)* filed by defendants Octane Fitness LLC, Nellie's Exercise Equipment Inc. Motion set for hearing on 11/3/2008 at 03:30 PM before Judge Cormac J. Carney. (Attachments: # 1 Declaration M. Cutler Declaration, # 2 Exhibit 1 - Porth Declaration, # 3 Exhibit 2 - Minnesota Complaint, # 4 Exhibit 3 - Ambrose v. Steelcase, # 5 Exhibit 4 - US v. Cathcart, # 6 Exhibit 5 - Steelcase v. Hayworth, # 7 Exhibit 6 - Catch Curve v. Venali, # 8 Exhibit 7 - Hawkins v. Davis, # 9 Exhibit 8 - In Re Yahoo!, # 10 Exhibit 9 - Celestial v. Susquehanna, # 11 Proposed Order) (Cutler, Matthew) (Entered: 10/10/2008)
10/20/2008	26	MEMORANDUM in Opposition to MOTION to Sever defendants & *Transfer Venue Pursuant to 28 USC §1404(a)* MOTION to Sever defendants & *Transfer Venue Pursuant to 28 USC §1404(a)* MOTION to Sever defendants & *Transfer Venue Pursuant to 28 USC §1404(a)* 25 filed by Plaintiff Icon Health & Fitness Inc. (Freeman, R) (Entered: 10/20/2008)

Appendix A

10/20/2008	27	DECLARATION of Everett Smith in support of opposition MOTION to Sever defendants *& Transfer Venue Pursuant to 28 USC §1404(a)* MOTION to Sever defendants *& Transfer Venue Pursuant to 28 USC §1404(a)* MOTION to Sever defendants *& Transfer Venue Pursuant to 28 USC §1404(a)* 25 filed by Plaintiff Icon Health & Fitness Inc. (Freeman, R) (Entered: 10/20/2008)
10/20/2008	28	DECLARATION of R. Parrish Freeman In Support of Opposition To MOTION to Sever defendants *& Transfer Venue Pursuant to 28 USC §1404(a)* MOTION to Sever defendants *& Transfer Venue Pursuant to 28 USC §1404(a)* MOTION to Sever defendants *& Transfer Venue Pursuant to 28 USC §1404(a)* 25 filed by Plaintiff Icon Health & Fitness Inc. (Attachments: # 1 Exhibit A, # 2 Exhibit B, # 3 Exhibit C)(Freeman, R) (Entered: 10/20/2008)
10/27/2008	30	REPLY Support MOTION to Sever defendants *& Transfer Venue Pursuant to 28 USC §1404(a)* MOTION to Sever defendants *& Transfer Venue Pursuant to 28 USC §1404(a)* MOTION to Sever defendants *& Transfer Venue Pursuant to 28 USC §1404(a)* 25 filed by Defendants Octane Fitness LLC, Nellie's Exercise Equipment Inc. (Cutler, Matthew) (Entered: 10/27/2008)

Appendix A

10/27/2008	31	DECLARATION of Matthew Cutler In Support of MOTION to Sever defendants *& Transfer Venue Pursuant to 28 USC §1404(a)* MOTION to Sever defendants *& Transfer Venue Pursuant to 28 USC §1404(a)* MOTION to Sever defendants *& Transfer Venue Pursuant to 28 USC §1404(a)* 25 filed by Defendants Octane Fitness LLC, Nellie's Exercise Equipment Inc. (Attachments: # 1 Exhibit 1 - Unpublished case Amazin Raisins v. Ocean Spray)(Cutler, Matthew) (Entered: 10/27/2008)
11/03/2008	32	MINUTES OF IN CHAMBERS ORDER by Judge Cormac J. Carney: GRANTING MOTION to Sever defendants & Transfer 25. (See document for details.) For the foregoing reasons, Defendants' motions to sever and transfer to the District of Minnesota are GRANTED. The parties are instructed to notify the Court by November 17, 2008, apprising the Court as to whether the claims against Nellies will be added to the case pending in the District of Minnesota. (rla) (Entered: 11/05/2008)

Appendix A

11/03/2008	33	MINUTES OF Defendants' Motion to Sever and Transfer Venue Pursuant to 28 U.S.C. Section 1404(a) held before Judge Cormac J. Carney 25. Court rules in accordance with the tentative order grannting defendant's motion to sever and transfer venue. Final order to be issued. Court Reporter: Maria Dellaneve. (db) (Entered: 11/12/2008)
11/17/2008	34	NOTICE Regarding Nellie's Exercise Equipment, Inc. filed by Plaintiff Icon Health & Fitness Inc. (Freeman, R) (Entered: 11/17/2008)
01/23/2009	35	MINUTES OF IN CHAMBERS ORDER held before Judge Cormac J. Carney: ORDER DISMISSING CASE In light of the notice from Plaintiff Icon Health & Fitness, Inc., filed on November 17, 2008, that it intends to pursue its claims against Nellie's Exercise Equipment, Inc., in the District of Minnesota, this case is DISMISSED 34. (Made JS-6. Case Terminated.) (ade) (Entered: 01/23/2009)

Appendix A

U.S. DISTRICT COURT
U.S. DISTRICT OF MINNESOTA (DMN)
CIVIL DOCKET CASE #: 0:09-CV-00319-ADM-SER

ICON HEALTH & FITNESS INC.,
A DELAWARE CORPORATION,

Plaintiff,

v.

OCTANE FITNESS LLC,
A MINNESOTA LIMITED LIABILITY COMPANY,

Defendant,

and

NELLIE'S EXERCISE EQUIPMENT INC.,
A CALIFORNIA CORPORATION,

Defendant.

Appendix A

Date Filed	#	Docket Text
02/11/2009	57	Case transferred in from the Central District of California; Case Number 8:08-cv-437 CJC-RNB. Original file with documents numbered 1-36 received. Case assigned to Judge Ann D. Montgomery per Patent List and referred to Magistrate Judge Susan R. Nelson. (Attachments: # 1 Complaint, # 10 Answer to Complaint and Counterclaims by Octane Fitness LLC, # 12 Answer and Counterclaims of Nellie's Exercise Equipment, Inc., # 24 Answer to Counterclaim by Icon Health & Fitness, Inc., # 25 Answer to Counterclaim by Icon Health & Fitness, Inc., # 29 Notice of Motion and Motion to sever Defendants and Transfer Venue, # 30 Declaration in Support, # 31 Exhibit 1 to Declaration, # 32 Exhibit 2 to Declaration, # 33 Exhibit 3 to Declaration, # 34 Exhibit 4 to Declaration, # 35 Exhibit 5 to Declaration, # 36 Exhibit 6 to Declaration, # 37 Exhibit 7 to Declaration, # 38 Exhibit 8 to Declaration, # 39 Exhibit 9 to Declaration, # 40 Proposed Order,

		# 41 Memorandum in Opposition to Motion to sever Defendants and Transfer Venue, # 42 Declaration in Opposition to Motion, # 43 Declaration in Opposition, # 44 Exhibit A to Declaration, # 45 Exhibit B to Declaration, # 46 Exhibit C to Declaration, # 48 Reply in Support of Motion, # 49 Declaration in Support, # 50 Exhibits to Declaration, # 51 Minutes granting Motion, # 52 Minutes in accordance with tentative order granting motion.
05/27/2009	77	STIPULATION of Dismissal *of all Claims Relating to US Patent No. 5,104,120* by all parties. (Attachments: # 1 Text of Proposed Order)(Freeman, R) Added filers on 6/5/2009 (RLR). (Entered: 05/27/2009)
05/29/2009	78	ORDER re 77 Stipulation of Dismissal filed by Icon Health & Fitness, Inc. Signed by Judge Ann D. Montgomery on 5/29/2009. (GS) (Entered: 05/29/2009)

Appendix A

09/11/2009	85	CLAIM CONSTRUCTION BRIEF *(Joint Claim Construction Statement)* filed by Icon Health & Fitness, Inc. (Attachments: # 1 Exhibit(s) A, # 2 Exhibit(s) B) (Veverka, C) (Entered: 09/11/2009)
09/14/2009	87	DEFENDANT OCTANE FITNESS' PROPOSED CLAIM CONSTRUCTIONS re 86 MOTION for Extension of Time to File by Octane Fitness, LLC. (Cutler, Matthew) Modified document title on 9/15/2009 (RLR). (Entered: 09/14/2009)
11/05/2009	90	MEMORANDUM by Octane Fitness, LLC re 89 Notice (Other) filed by Octane Fitness, LLC. (Attachments: # 1 Exhibit(s) 1, # 2 Exhibit(s) 2, # 3 Exhibit(s) 3, # 4 Exhibit(s) 4, # 5 Exhibit(s) 5, # 6 Exhibit(s) 6, # 7 Exhibit(s) 7, # 8 Exhibit(s) 8, # 9 Exhibit(s) 9, # 10 Exhibit(s) 10, # 11 Exhibit(s) 11, # 12 Exhibit(s) 12, # 13 Exhibit(s) 13, # 14 Exhibit(s) 14)(Cutler, Matthew) Modified on 11/6/2009 (kt). (Entered: 11/05/2009)
11/06/2009	92	MOTION to Strike 90 Memorandum, by Octane Fitness, LLC. (Cutler, Matthew) (Entered: 11/06/2009)

11/06/2009	93	DECLARATION of Tim Porth re 90 Memorandum, by Octane Fitness, LLC. (Cutler, Matthew) (Entered: 11/06/2009)
11/06/2009	94	DECLARATION of Matthew Cutler re 90 Memorandum, by Octane Fitness, LLC. (Cutler, Matthew) (Entered: 11/06/2009)
12/02/2009	99	MEMORANDUM in Opposition re 92 MOTION to Strike 90 Memorandum, *(Motion to Strike New Contentions Contained in ICON's Supplemental Claim Chart and for Partial Summary Judgment)* filed by Icon Health & Fitness, Inc. (Hall, H) (Entered: 12/02/2009)
12/02/2009	101	DECLARATION of Craig Hall in Opposition to 99 Memorandum in Opposition to Motion filed by Icon Health & Fitness, Inc. (Attachments: # 1 Exhibit(s) A, # 2 Exhibit(s) B, # 3 Exhibit(s) C, # 4 Exhibit(s) D, # 5 Exhibit(s) E, # 6 Exhibit(s) F, # 7 Exhibit(s) G, # 8 Exhibit(s) H, # 9Exhibit(s) I, # 10 Exhibit(s) J, # 11 Exhibit(s) K) (Hall, H) SEALED DOCUMENT RECEIVED IN CLERK'S OFFICE ON 12/3/09. (KT) (Entered: 12/02/2009)

12/10/2009	102	REPLY to Response to Motion re 92 MOTION to Strike 90 Memorandum, filed by Octane Fitness, LLC. (Attachments: # 1 Exhibit(s) Exhibit 15)(Cutler, Matthew) (Entered: 12/10/2009)
02/04/2010	108	REPORT AND RECOMMENDATION: Defendant's Motion to Strike and for Partial Summary Judgment (Doc. No. 92) be DENIED. Objections to R&R due by 2/19/2010 Signed by Magistrate Judge Susan R. Nelson on 02/04/2010. (MMP) Modified on 2/5/2010 (akl). (Entered: 02/04/2010)
02/19/2010	110	TRANSCRIPT of Motions Hearing held on 12-21-2009 before Magistrate Judge Susan R. Nelson. (42 pages). Court Reporter: Dawn Hansen (E-mail: Dawn_Hansen@mnd.uscourts.gov. Telephone: (612) 664-5107). Redaction Request due 3/12/2010. Redacted Transcript Deadline set for 3/22/2010. Release of Transcript Restriction set for 5/20/2010. For information on redaction procedures, please review Local Rule 5.5. (dmh) (Entered: 02/19/2010)

Appendix A

02/19/2010	111	OBJECTION to 108 Report and Recommendations *Relating to its Motion to Strike and For Partial Summary Judgment* filed by Octane Fitness, LLC. (Attachments: # 1 Exhibit(s) 1, # 2 LR7.1 Word Count Compliance Certificate) (Cutler, Matthew) Modified text on 2/22/2010 (akl). (Entered: 02/19/2010)
03/08/2010	112	RESPONSE TO OBJECTION to 111, 108 Report and Recommendation *Relating to its Motion to Strike and for Partial Summary Judgment* filed by Icon Health & Fitness, Inc. (Attachments: # 1 LR7.1 Word Count Compliance Certificate)(Hall, H) (Entered: 03/08/2010)
05/05/2010	115	MEMORANDUM OPINION AND ORDER Overruling 111 Defendant's Objections, Adopting 108 Report and Recommendation; denying 92 Defendant's Motion to Strike and for Partial Summary Judgment (Written Opinion). Signed by Judge Ann D. Montgomery on 05/05/2010. (TLU) (Entered: 05/05/2010)

Appendix A

06/01/2010	120	REPORT Re 87 Report *Supplemental Proposed Claim Constructions* by Octane Fitness, LLC. (Attachments: # 1 Attachment A - dictionary definition). (Cutler, Matthew) Modified text on 6/1/2010 (lmb). (Entered: 06/01/2010)
06/08/2010	122	MOTION for Summary Judgment *of Non-Infringement* by Octane Fitness, LLC. (Cutler, Matthew) (Entered: 06/08/2010)
06/08/2010	123	MEMORANDUM by Octane Fitness, LLC re 122 MOTION for Summary Judgment *of Non-Infringement* filed by Octane Fitness, LLC. (Attachments: # 1 Exhibit(s) 1 - '710 Patent, # 2 Exhibit(s) 2 - Porth depo. excerpts, # 3 Exhibit(s) 3 - Smith depo. excerpts, # 4 Exhibit(s) 4 - Logan depo. excerpts, # 5 Placeholder for Exh. 5, # 6 Placeholder for Exh. 6, # 7 Placeholder for Exh. 7, # 8 Placeholder for Exh. 8, # 9 Exhibit(s) 9 - Lenz Rebuttal Expert Report, # 10 Exhibit(s) 10 - Tangren depo. excerpts, # 11 Exhibit(s) 11 - Notice of Allowability, # 12 Exhibit(s) 12 - Rasty Expert Report,

Appendix A

13 Exhibit(s) 13 - '321 Patent,
14 Placeholder for Exh. 14,
15 Exhibit(s) 15 - 8/7/09 Letter,
16 Exhibit(s) 16 - Icon's
Proposed Claim Constructions,
17 Exhibit(s) 17 - Rasty depo.
exh. 5, # 18 Exhibit(s) 18 - Rasty
depo. exh. 6, # 19 Exhibit(s) 19 -
Rasty depo. exh. 7, # 20 Exhibit(s)
20 - Rasty depo. exh. 8,
21 Exhibit(s) 21 - Rasty depo.
excerpts, # 22 Exhibit(s) 22 - Lenz
depo. excerpts, # 23 Exhibit(s)
23 - Dictionary definition,
24 Placeholder for Exh. 24,
25 Exhibit(s) 25 - Q47 photograph,
26 Placeholder for Exh. 26,
27 Exhibit(s) 27 - Q45 photograph,
28 Exhibit(s) 28 - McGinnis depo.
excerpts, # 29 Exhibit(s) 29 - Lee
depo. excerpts, # 30 Exhibit(s)
30 - Gunderson depo. excerpts,
31 LR7.1 Word Count Compliance
Certificate, # 32 Certificate of
Service)(Cutler, Matthew) SEALED
DOCUMENT RECEIVED IN
CLERK'S OFFICE ON 6/9/10. (KT)
(Entered: 06/08/2010)

06/08/2010	124	DECLARATION of Matthew L. Cutler re 122 MOTION for Summary Judgment of Non-Infringement by Octane Fitness, LLC. (Cutler, Matthew) Modified text and link on 6/9/2010 (lmb). (Entered: 06/08/2010)
06/08/2010	126	EXHIBIT re 123 Memorandum, 122 MOTION for Summary Judgment *of Non-Infringement Proposed Order* by Octane Fitness, LLC filed by Octane Fitness, LLC. (Cutler, Matthew) (Entered: 06/08/2010)
06/09/2010	127	UNREDACTED MEMORANDUM (Under Seal) re 123 Memorandum, *Placeholder for unredacted version of Memorandum* by Octane Fitness, LLC filed by Octane Fitness, LLC. (Lindsay, Michael) Modified text on 6/9/2010 (lmb). SEALED DOCUMENT RECEIVED IN CLERK'S OFFICE ON 6/9/10. (KT) (Entered: 06/09/2010)
06/14/2010	128	LETTER TO MAGISTRATE JUDGE re 122 Motion for Summary Judgment of Non-Infringement by Icon Health & Fitness, Inc. (Veverka, C) Modified on text and link 6/15/2010 (lmb). (Entered: 06/14/2010)

06/21/2010	130	TEXT ONLY ENTRY. Oral ORDER ruling that Defendants' currently scheduled motion for summary judgment must be rescheduled after this Court rules on the issues to be presented at the scheduled Markman hearing. Text only Order needed. Signed by Judge Magistrate Judge Susan R. Nelson. (MMP) (Entered: 06/21/2010)
09/09/2010	131	CLAIM CONSTRUCTION BRIEF filed by Icon Health & Fitness, Inc. (Attachments: # 1 Exhibit(s) A, # 2 Exhibit(s) B, # 3 Exhibit(s) C-part 1, # 4 Exhibit(s) C-part 2, # 5 Exhibit(s) C-part 3, # 6 LR7.1 Word Count Compliance Certificate). (Veverka, C) (Entered: 09/09/2010)
09/30/2010	134	RESPONSE re 131 Claim Construction Brief, filed by Octane Fitness, LLC. (Attachments: # 1 Exhibit(s) 1 - '710 patent, # 2 Exhibit(s) 2 - Porth depo. excerpts, # 3 Placeholder for Ex. 3 - Smith depo. excerpts, # 4 Placeholder for Ex. 4 - industry publication, # 5 Placeholder for Ex. 5 - Logan depo. excerpts, # 6 Placeholder for Ex. 6 - Dalebout depo. excerpts, # 7 Placeholder for Ex. 7 - disk containing videos,

		# 8 Exhibit(s) 8 - Reasons for allowance, # 9 Exhibit(s) 9 - dictionary definition, # 10 Placeholder for Ex. 10 - Eng. drawing, # 11 Exhibit(s) 11 - photo, # 12 Exhibit(s) 12 - Tangren depo. excerpts, # 13 Exhibit(s) 13 - Prop. claim const, # 14 Exhibit(s) 14 - Rasty depo. excerpts, # 15 Exhibit(s) 15 - drawing, # 16 Exhibit(s) 16 - drawing, # 17 Exhibit(s) 17 - drawing, # 18 Exhibit(s) 18 - drawing, # 19 Exhibit(s) 19 - Becton case, # 20 Exhibit(s) 20 - Neopost case, # 21 Placeholder for Ex. 21 - 9/16/09 email, # 22 LR7.1 Word Count Compliance Certificate)(Cutler, Matthew) SEALED DOCUMENT RECEIVED IN CLERK'S OFFICE ON 9/30/10. (KT) CD RECEIVED CONVENTIONALLY IN CLERK'S OFFICE ON 9/30/10. (KT) (Entered: 09/30/2010)
10/07/2010	137	CLAIM CONSTRUCTION BRIEF *(Reply)* filed by Icon Health & Fitness, Inc. (Attachments: # 1 LR7.1 Word Count Compliance Certificate, # 2 Certificate of Service). (Veverka, C) (Entered: 10/07/2010)

Appendix A

10/11/2010	139	CLAIM CONSTRUCTION BRIEF *(Supplemental Reply)* filed by Icon Health & Fitness, Inc.. (Attachments: # 1 Declaration of H. Craig Hall, Jr. In Support of ICON's Supplemental Reply Brief on Claim Construction, # 2 Exhibit(s) 1 to Declaration of H. Craig Hall, Jr., # 3 Exhibit(s) 2 to Declaration of H. Craig Hall, Jr., # 4 Exhibit(s) 3 to Declaration of H. Craig Hall, Jr., # 5 Exhibit(s) 4 to Declaration of H. Craig Hall, Jr., # 6 Certificate of Service)(Veverka, C) (Entered: 10/11/2010)
10/13/2010	141	CLAIM CONSTRUCTION BRIEF *In Opposition to Icon's Supplemental Reply Brief on Claim Construction 139* filed by Octane Fitness, LLC. (Attachments: # 1 Placeholder for Exhibit A, # 2 Placeholder for Exhibit B, # 3 Exhibit(s) Exhibit C - Luger Deposition Excerpts)(Telscher, Rudolph) Modified link on 10/13/2010 (lmb). SEALED DOCUMENT RECEIVED IN CLERK'S OFFICE ON 10/13/10. (KT) (Entered: 10/13/2010)

12/22/2010	144	MEMORANDUM OPINION AND ORDER; IT IS HEREBY ORDERED that in interpreting the 710 patent, the contested terms be construed in accordance with this Order (Written Opinion). Signed by Judge Ann D. Montgomery on 12/22/2010. (TLU) (Entered: 12/22/2010)
02/11/2011	149	TRANSCRIPT of Markman Hearing held on October 21, 2010 before Judge Ann D. Montgomery. (80 pages). Court Reporter: Tim Willette (E-mail: Tim_Willette@mnd.uscourts.gov. Telephone: (612) 664-5108). Redaction Request due 3/4/2011. Redacted Transcript Deadline set for 3/14/2011. Release of Transcript Restriction set for 5/12/2011. For information on redaction procedures, please review Local Rule 5.5. (TJW) (Entered: 02/11/2011)

Appendix A

02/15/2011	150	MOTION TO STRIKE THE PORTION OF PLAINTIFF'S TECHNICAL EXPERT'S REPORT DISCUSSING INFRINGEMENT BY EQUIVALENCY AND PRECLUDING TESTIMONY RELATING THERETO by Octane Fitness, LLC. (Cutler, Matthew) (Entered: 02/15/2011)
02/15/2011	152	MEMORANDUM in Support re 150 MOTION TO STRIKE THE PORTION OF PLAINTIFF'S TECHNICAL EXPERT'S REPORT DISCUSSING INFRINGEMENT BY EQUIVALENCY AND PRECLUDING TESTIMONY RELATING THERETO filed by Octane Fitness, LLC. (Attachments: # 1 LR7.1 Word Count Compliance Certificate)(Cutler, Matthew) (Entered: 02/15/2011)

02/15/2011	153	DECLARATION of Matthew L. Cutler re 152 Memorandum in Support of Motion, by Octane Fitness, LLC. (Attachments: # 1 Exhibit(s) 1 Expert Report of Jahan Rasty, # 2 Exhibit(s) 2 Addendum to Rasty Expert Report, # 3 Exhibit(s) 3 Part 1 of Rebuttal Expert Report for Lenz, #4 Exhibit(s) 3 Part 2 Rebuttal Expert Report for Lenz, # 5 Exhibit(s) 3 Part 3 Rebuttal Expert Report for Lenz, # 6 Exhibit(s) 3 Part 4 Rebuttal Expert Report for Lenz, # 7 Exhibit(s) 3 Part 5 Rebuttal Expert Report for Lenz, # 8 Exhibit(s) 4 Deposition of Jahan Rasty, # 9 Placeholder for Exhibit 5, # 10 Certificate of Service). SEALED DOCUMENT RECEIVED IN CLERK'S OFFICE ON 2/16/11. (Cutler, Matthew) Modified text on 2/16/2011 (lmb). Modified on 2/16/2011 (akl). (Entered: 02/15/2011)
02/15/2011	155	MOTION for Summary Judgment *of Non-Infringement* by Octane Fitness, LLC. (Cutler, Matthew) (Entered: 02/15/2011)

02/15/2011	157	MEMORANDUM in Support re 155 MOTION for Summary Judgment *of Non-Infringement* filed by Octane Fitness, LLC. (Attachments: # 1 LR7.1 Word Count Compliance Certificate). (Cutler, Matthew) Modified text on 2/16/2011 (lmb). (Entered: 02/15/2011)
02/15/2011	158	DECLARATION of Matthew L. Cutler re 157 Memorandum in Support of Motion by Octane Fitness, LLC. (Attachments: # 1 Exhibit(s) 1 US Patent 6,019710, # 2 Placeholder for Exhibit 2, # 3 Placeholder for Exhibit 3, # 4 Exhibit(s) 4 Part 1 Rebuttal Expert Report for Lenz, # 5 Exhibit(s) 4 Part 2 Rebuttal Expert Report for Lenz, # 6 Exhibit(s) 4 Part 3 Rebuttal Expert Report for Lenz, # 7 Exhibit(s) 4 Part 4 Rebuttal Expert Report for Lenz, # 8 Exhibit(s) 4 Part 5 Rebuttal Expert Report for Lenz, # 9 Exhibit(s) 5 Deposition of Timothy Porth, # 10 Exhibit(s) 6 Deposition of Dennis Lee, # 11 Exhibit(s) 7 Deposition of Collen Logan, # 12 Placeholder

		for Exhibit 8, # 13 Exhibit(s) 9 Deposition of Pat McGinnis, # 14 Placeholder for Exhibit 10, # 15 Exhibit(s) 11 Deposition of Everett Smith, # 16 Exhibit(s) 12 Deposition of Lance Gunderson, #17 Exhibit(s) 13 Notice of Allowability, # 18 Exhibit(s) 14 Expert Report of Jahan Rasty, # 19 Exhibit(s) 15 Defendant Octane Fitness' Claim Chart, # 20 Exhibit(s) 16 Deposition of Jahan Rasty, # 21 Placeholder for Exhibit 17, # 22 Exhibit(s) 18 US Patent 5,707,321, # 23 Certificate of Service). SEALED DOCUMENTS RECEIVED IN CLERK'S OFFICE ON 2/16/11. (Cutler, Matthew) Modified text on 2/16/2011 (lmb). Modified on 2/16/2011 (akl). (Attachment(s) added on 5/24/2012: # 24 Exhibit 7 (Public Version), # 25 Exhibit 11 (Public Version)) (Attachment #24 and #25 added on 5/24/2012 per 234 Order (TSS). (Entered: 02/15/2011)
02/15/2011	160	MOTION for Partial Summary Judgment *that U.S. Patent Nos. 5,895,339 and 5,957,814 are not prior art to the asserted patent* by Icon Health & Fitness, Inc. (Veverka, C) (Entered: 02/15/2011)

02/15/2011	161	MEMORANDUM in Support re 160 MOTION for Partial Summary Judgment *that U.S. Patent Nos. 5,895,339 and 5,957,814 are not prior art to the asserted patent* filed by Icon Health & Fitness, Inc. (Attachments: # 1 LR7.1 Word Count Compliance Certificate). (Veverka, C) (Entered: 02/15/2011)
02/15/2011	162	DECLARATION of H Craig Hall Jr in Support of 160 MOTION for Partial Summary Judgment *that U.S. Patent Nos. 5,895,339 and 5,957,814 are not prior art to the asserted patent* filed by Icon Health & Fitness, Inc. (Attachments: # 1 Exhibit(s) Ex-A Patent '710, # 2 Exhibit(s) Ex-B Dalebout Depo., # 3 Exhibit(s) Ex-C Photos, # 4 Exhibit(s) Ex-D Richards Depo., # 5 Exhibit(s) Ex-E Richards Declaration, # 6 Exhibit(s) Ex-F Guynn Depo., # 7 Exhibit(s) Ex-G Legal billing, # 8 Exhibit(s) Ex-H Patent '339, # 9 Exhibit(s) Ex-I Patent '814, # 10 Exhibit(s) Ex-J Table, # 11 Exhibit(s) Ex-L Patent '321, # 12 Exhibit(s) Ex-M Stearns Depo., # 13 Exhibit(s) Ex-N Maresh Depo.). (Veverka, C) (Entered: 02/16/2011)

02/16/2011	163	EXHIBIT re 162 Declaration in Support, *Exhibit K-Engineering drawings* by Icon Health & Fitness, Inc. (Veverka, C) (Entered: 02/16/2011)
03/08/2011	168	RESPONSE re 160 MOTION for Partial Summary Judgment *that U.S. Patent Nos. 5,895,339 and 5,957,814 are not prior art to the asserted patent* filed by Octane Fitness, LLC. (Telscher, Rudolph) (Entered: 03/08/2011)
03/08/2011	169	MEMORANDUM in Opposition re 150 MOTION TO STRIKE THE PORTION OF PLAINTIFF'S TECHNICAL EXPERT'S REPORT DISCUSSING INFRINGEMENT BY EQUIVALENCY AND PRECLUDING TESTIMONY RELATING THERETO filed by Icon Health & Fitness, Inc. (Attachments: # 1 LR7.1 Word Count Compliance Certificate). (Veverka, C) (Entered: 03/08/2011)

03/08/2011	170	DECLARATION of HY. Craig Hall in Support of 169 Memorandum in Opposition to Motion, filed by Icon Health & Fitness, Inc. (Attachments: # 1 Exhibit(s) A, # 2 Exhibit(s) B, # 3 Exhibit(s) C, # 4 Exhibit(s) D, # 5 Exhibit(s) E, # 6 Exhibit(s) F, # 7 Exhibit(s) G, # 8 Exhibit(s) H, # 9 Exhibit(s) I, # 10 Exhibit(s) J, # 11 Exhibit(s) K). (Hall, H) Modified text on 3/9/2011 (akl). (Entered: 03/08/2011)
03/08/2011	171	MEMORANDUM in Opposition re 155 MOTION for Summary Judgment *of Non-Infringement PLACEHOLDER-DOCUMENT FILED UNDER SEAL* filed by Icon Health & Fitness, Inc. (Veverka, C) (Entered: 03/08/2011)
03/08/2011	172	DECLARATION of C.J. Veverka-PLACEHOLDER FILED UNDER SEAL in Support of 171 Memorandum in Opposition to Motion filed by Icon Health & Fitness, Inc. (Veverka, C) SEALED DOCUMENT RECEIVED IN CLERK'S OFFICE ON 3/9/11 (KT) (Entered: 03/08/2011)

03/08/2011	173	DECLARATION of Jahan Rasty, Ph.D.-PLACEHOLDER-FILED UNDER SEAL in Support of 171 Memorandum in Opposition to Motion filed by Icon Health & Fitness, Inc. (Veverka, C) SEALED DOCUMENT RECEIVED IN CLERK'S OFFICE ON 3/9/11. (KT) (Entered: 03/09/2011)
03/09/2011	175	MEMORANDUM in Opposition re 155 MOTION for Summary Judgment *of Non-Infringement CORRECTED PLACEHOLDER-MEMORANDUM FILED UNDER SEAL* filed by Icon Health & Fitness, Inc. (Veverka, C) SEALED DOCUMENT RECEIVED IN CLERK'S OFFICE ON 3/9/11. (KT) (Entered: 03/09/2011)
03/15/2011	177	REPLY In Support re 150 MOTION TO STRIKE THE PORTION OF PLAINTIFF'S TECHNICAL EXPERT'S REPORT DISCUSSING INFRINGEMENT BY EQUIVALENCY AND PRECLUDING TESTIMONY RELATING THERETO filed by Octane Fitness, LLC. (Attachments: # 1 LR7.1 Word Count Compliance Certificate). (Cutler, Matthew) Modified text on 3/16/2011 (lmb). (Entered: 03/15/2011)

03/15/2011	178	DECLARATION of Matthew L. Cutler in Support of 155 Motion for Summary Judgment of Non-Infringement, filed by Octane Fitness, LLC. (Attachments: # 1 Exhibit 6: Deposition of Steve Lenz, # 2 Exhibit 7: August 2009 Letter from M. Cutler to H. Craig Hall, # 3 Exhibit 8: Deposition of Jahan Rasty, # 4 Certificate of Service). (Cutler, Matthew) Modified text and link on 3/16/2011 (lmb). (Entered: 03/15/2011)
03/15/2011	180	DECLARATION of Rudolph A. Telscher in Support of 179 Reply to Response to Motion filed by Octane Fitness, LLC. (Attachments: # 1 Exhibit 19 US Patent 5,672,140, # 2 Placeholder for Exhibit 20, # 3 Placeholder for Exhibit 21, # 4 Placeholder for Exhibit 22, # 5 Certificate of Service). (Telscher, Rudolph) Modified text on 3/16/2011 (lmb). SEALED DOCUMENT RECEIVED IN CLERK'S OFFICE ON 3/16/11. (KT) (Entered: 03/15/2011)

03/16/2011	183	REPLY to Response to Motion re 155 MOTION for Summary Judgment *of Non-Infringement* filed by Octane Fitness, LLC. (Attachments: # 1 Redacted Brief, # 2 LR7.1 Word Count Compliance Certificate)(Telscher, Rudolph) DOCUMENT RECEIVED IN CLERK'S OFFICE 3/16/11. 3/17/2011 (jam). (Entered: 03/16/2011)
06/17/2011	187	MEMORANDUM OPINION AND ORDER denying 150 Defendant's Motion to strike portions of expert report; granting 155 Defendant's Motion for Summary Judgment (Written Opinion). Signed by Judge Ann D. Montgomery on 06/17/2011. (TLU) (Entered: 06/17/2011)
07/14/2011	189	STIPULATION re 188 Judgment *For Entry Of Final Judgment* by Icon Health & Fitness, Inc., Octane Fitness, LLC. (Veverka, C) (Entered: 07/14/2011)
07/15/2011	190	ORDER FOR ENTRY OF FINAL JUDGMENT re 189 Stipulation filed by Icon Health & Fitness, Inc., Octane Fitness, LLC. Signed by Judge Ann D. Montgomery on July 15, 2011. (Kimlinger, Mary) (Entered: 07/15/2011)

07/15/2011	191	JUDGMENT (Attachments: # 1 Civil Notice - appeal, # 2 Civil-8th Circuit Pre-Hearing Conference Notice). (lmb) (Entered: 07/15/2011)
07/18/2011	194	MOTION for Attorney Fees *and costs* by Octane Fitness, LLC. (Attachments: # 1 Placeholder for Unredacted Motion) SEALED DOCUMENT RECEIVED IN CLERK'S OFFICE ON 7/19/11. (Telscher, Rudolph) Modified on 7/26/2011 (akl). (Entered: 07/18/2011)
07/18/2011	195	NOTICE OF HEARING ON 194 MOTION *for Attorney Fees and Costs* at a time and date to be determined by The Court. (Telscher, Rudolph) Modified text and link on 7/19/2011 (lmb). (Entered: 07/18/2011)
07/18/2011	196	MEMORANDUM in Support re 194 MOTION for Attorney Fees *and costs* filed by Octane Fitness, LLC. (Attachments: # 1 Placeholder for Memorandum, # 2 LR7.1 Word Count Compliance Certificate) SEALED DOCUMENT RECEIVED IN CLERK'S OFFICE ON 7/19/11. (Telscher, Rudolph) Modified on 7/26/2011 (akl). (Entered: 07/18/2011)

07/18/2011	197	Declaration of Rudolph A. Telscher in Support of 196 Memorandum in Support of Motion filed by Octane Fitness, LLC. (Attachments: # 1 Placeholder for Declaration of Rudolph Telscher, # 2 Placeholder for Exhibit 1, # 3 Placeholder for Exhibit 2, # 4 Exhibit(s) 3) SEALED DOCUMENT RECEIVED IN CLERKS OFFICE ON 7/19/11. (Telscher, Rudolph) Modified on 7/26/2011 (akl). (Entered: 07/18/2011)
08/03/2011	200	NOTICE OF APPEAL TO FEDERAL CIRCUIT as to 144 Order, 191 Judgment, 190 Order, 187 Order on Motion for Miscellaneous Relief, Order on Motion for Summary Judgment by Icon Health & Fitness, Inc.. (Veverka, C) (Entered: 08/03/2011)
08/04/2011	205	MEMORANDUM by Icon Health & Fitness, Inc. re 194 MOTION for Attorney Fees *and costs Opposition to Defendant Octane Fitness, LLC's Motion for Attorney Fees and Costs* filed by Icon Health & Fitness, Inc. (Attachments: # 1 LR7.1 Word Count Compliance Certificate) (Veverka, C) (Entered: 08/04/2011)

08/04/2011	206	Declaration of H. Craig Hall in Support of 205 Memorandum, filed by Icon Health & Fitness, Inc. (Attachments: # 1 Exhibit(s) A-Octane's Proposed Claim, # 2 Exhibit(s) B-Addendum to Expert Report, # 3 Exhibit(s) C-Porth Depo, # 4 Exhibit(s) D-Octane's Supplemental Prior Art Statement)(Hall, H) (Entered: 08/04/2011)
08/17/2011	211	TRANSCRIPT of Hearing on Defendant's Motion to Strike [Docket No. 150], Defendant's Motion for Summary Judgment [Docket No. 155], and Plaintiff's Motion for Partial Summary Judgment [Docket No. 160] held on Tuesday, March 29, 2011 before Judge Ann D. Montgomery. (48 pages). Court Reporter: Tim Willette (E-mail: Tim_Willette@mnd.uscourts.gov. Telephone: (612) 664-5108). Redaction Request due 9/7/2011. Redacted Transcript Deadline set for 9/19/2011. Release of Transcript Restriction set for 11/15/2011. For information on redaction procedures, please review Local Rule 5.5. (TJW) (Entered: 08/17/2011)

08/19/2011	213	MOTION for Attorney Fees, MOTION for Leave to File Reply/ Surreply by Octane Fitness, LLC. ***ATTACHMENTS FILED IN ERROR-DO NOT COMPLY WITH RULES FOR FILING*** (Attachments: # 1 Appendix Octane Fitness LLC's Reply Memorandum in Support of its Motion for Attorney Fees and Costs, # 2 LR7.1 Word Count Compliance Certificate Certificate of Compliance, # 3 Declaration of Rudolph A. Telscher in Support of Defendant's Motion for Leave to File Reply Memorandum in Support of its Motion for Attorney Fees and Costs). (Telscher, Rudolph) Modified text on 8/19/2011 (lmb). (Entered: 08/19/2011)
09/01/2011	219	MEMORANDUM in Opposition re 213 MOTION for Attorney Fees MOTION for Leave to File Reply/ Surreply filed by Icon Health & Fitness, Inc. (Attachments: # 1 LR7.1 Word Count Compliance Certificate)(Hall, H) (Entered: 09/01/2011)

09/06/2011	220	MEMORANDUM OPINION AND ORDER denying 194 Defendant's Motion for Attorney Fees; denying 213 Defendant's Motion for Leave to File Reply/Surreply (Written Opinion). Signed by Judge Ann D. Montgomery on 09/06/2011. (TLU) (Entered: 09/06/2011)
09/19/2011	221	NOTICE OF APPEAL TO FEDERAL CIRCUIT by Octane Fitness, LLC. (Telscher, Rudolph) (Entered: 09/19/2011)
09/29/2011	224	STIPULATION *to Remove Seal from Certain Documents* by Octane Fitness, LLC, Icon Health & Fitness, Inc. (Telscher, Rudolph) Modified filers on 9/30/2011 (lmb). (Entered: 09/29/2011)
09/30/2011	226	ORDER to Remove Seal from Certain Documents pursuant to 224 Stipulation filed by Octane Fitness, LLC. Signed by Judge Ann D. Montgomery on 09/30/2011. (TLU) (Entered: 09/30/2011)

10/03/2011	227	NOTICE by Octane Fitness, LLC *Certificate Pursuant to Fed.R.App.P. 10(b)(1)(B) and Statement of Issues for Appeal Pursuant to Fed.R.App.P. 10(b)(3)9A)* (Attachments: # 1 Transcript Purchase Order)(Telscher, Rudolph) (Entered: 10/03/2011)
10/29/2012	235	Opinion and Judgment of the USCA for the Federal Circuit as to Notice of Appeal. (kt) Modified on 10/29/2012 (TSS). (Entered: 10/29/2012)
01/07/2013	236	ORDER of USCA as to 221 Notice of Appeal to Federal Circuit affirming judgment of District Court. (kt) DOCUMENT QC'D ON 1-10-13 LGL Modified on 1/10/2013 (LGL). (Entered: 01/07/2013)
01/07/2013	237	USCA for the Federal Circuit JUDGMENT as to 221 Notice of Appeal to Federal Circuit filed by Octane Fitness, LLC. (kt) DOCUMENT QC'D ON 1-10-13 LGL Modified on 1/10/2013 (LGL). (Entered: 01/07/2013)

Appendix A

U.S. COURT OF APPEALS FOR THE FEDERAL CIRCUIT

ICON HEALTH

v

OCTANE FITNESS

2011-1521

Date	History
10/24/2012	Disposition: Affirmed; by Panel
1/3/2013	Mandated on

MOTIONS AND OTHER ENTRIES

Entry 49 :	Entered : 1/3/2013, Costs taxed against the appellant, Icon Health & Fitness, Inc. in the amount of $1218.00. **SERVICE :** by Court on 1/3/2013
Entry 46 :	Filed : 11/7/2012, Appellee Octane Fitness' Bill of Costs against appellant. **SERVICE :** by Mail on 11/7/2012
Entry 24 :	Entered : 1/10/2012, Note to File: appeals 2011-1521 and 2011-1636, docketed on 8/10/11 and 9/30/11, respectively, are consolidated

Entry 21 :	Filed : 1/10/2012, Official caption revised pursuant to this court's order dated January 10, 2012. **SERVICE :** by Court on 1/10/2012 **DOC:** Icon Health 2011-1521 (1.10.12 CAPTION).pdf
Entry 20 :	Filed : 1/10/2012, Ordered: The motion to consolidate 2011-1521 with 2011-1636 is granted. The revised official caption is reflected in the order. By: Clerk. **SERVICE :** by Court on 1/10/2012
BRIEFS	
5/14/2012	Appendix (Two Volumes). BY Icon Health & Fitness, Inc. (Appellant). SERVED BY Mail ON 5/14/2012. FILED ON 5/14/2012. (CONFIDENTIAL & NON-CONFIDENTIAL VERSIONS)
5/14/2012	Supplementary Video Recording Media Appendix. BY Icon Health & Fitness, Inc. (Appellant). SERVED BY Mail ON 5/14/2012. FILED ON 5/14/2012. (NON-CONFIDENTIAL)
5/3/2012	Reply Brief for Defendant-Cross Appellant Octane Fitness, LLC . BY Octane Fitness, LLC (Appellee). SERVED BY Mail ON 5/3/2012. FILED ON 5/3/2012. (CONFIDENTIAL & NON-CONFIDENTIAL VERSIONS)

4/2/2012	Response and Reply Brief of Appellant Icon Health & Fitness, Inc . BY Icon Health & Fitness, Inc. (Appellant). SERVED BY Mail ON 4/2/2012. FILED ON 4/2/2012. (NON-CONFIDENTIAL)
1/27/2012	Brief for Defendant-Cross Appellant Octane Fitness, LLC. BY Octane Fitness, LLC (Cross-Appellant). SERVED BY Mail ON 1/27/2012. FILED ON 1/27/2012. (NON-CONFIDENTIAL)
11/10/2011	Brief for Appellant Icon Health & Fitness, Inc. BY Icon Health & Fitness, Inc. (Appellant). SERVED BY Mail ON 11/10/2011. FILED ON 11/10/2011. (NON-CONFIDENTIAL)
REHEARING	
11/21/2012	Entry 47 : Cross-Appellant [Octane Fitness, LLC]-Petition for Rehearing En Banc. Mail Service-11/21/2012. Filed: 11/21/2012. Entry 48: Petition/En Banc Action: Denied/Denied on 12/27/2012.

APPENDIX B — COMPLAINT IN THE UNITED STATES DISTRICT COURT CENTRAL DISTRICT OF CALIFORNIA SOUTHERN DIVISION, DATED APRIL 22, 2008

UNITED STATES DISTRICT COURT
CENTRAL DISTRICT OF CALIFORNIA
SOUTHERN DIVISION

Case No.: SACV08-00437 CJC (RNBx)

ICON HEALTH & FITNESS, INC.,
a Delaware corporation,

Plaintiff,

v.

OCTANE FITNESS, LLC, a Minnesota limited liability company, and NELLIE'S EXERCISE EQUIPMENT, INC., a California corporation,

Defendants.

COMPLAINT FOR PATENT INFRINGEMENT

[Demand For Jury Trial]

Plaintiff ICON Health & Fitness, Inc. ("ICON"), hereby complains against defendants Octane Fitness, LLC, and Nellie's Exercise Equipment, Inc. (collectively, "Defendants"), and alleges as follows:

Appendix B

I. THE PARTIES

1. ICON is a corporation duly organized and existing under the laws of the State of Delaware, with its principal place of business at 1500 South 1000 West, Logan, Utah 84321.

2. Upon information and belief, defendant Octane Fitness, LLC ("Octane") is a Minnesota limited liability company having a place of business at 9200 Wyoming Avenue North, Suite 390, Brooklyn Park, Minnesota 55445.

3. Upon information and belief, defendant Nellie's Exercise Equipment, Inc. ("Nellie's") is a California corporation having a place of business at 2410 Wardlow Road, Suite 103, Corona, California 92880.

II. JURISDICTION AND VENUE

4. This is a civil action by ICON for patent infringement committed by Defendants, which arises under the patent laws of the United States, including 35 U.S.C. §§ 271, 281, 283, 284, and 285.

5. Because ICON's claims for relief arise under the laws of the United States, this Court has original subject matter jurisdiction over such claims pursuant to 28 U.S.C. § 1331.

6. Because ICON's claims for relief arise under acts of Congress relating to patents, this Court has original

subject matter jurisdiction over such claims pursuant to 28 U.S.C. § 1338(a).

7. ICON further alleges on information and belief that defendant Octane has sold or contracted for the sale of infringing goods to defendant Nellie's and to others within the State of California, and that Nellie' s and others have in turn sold those goods to the consuming public. These actions by Defendants relate to and, in part, give rise to the claims asserted herein by ICON, and have resulted in injury to ICON.

8. This Court's exercise of personal jurisdiction over out-of-state defendant Octane is consistent with the Constitutions of the United States and the State of California. Moreover, this Court has personal jurisdiction over Octane pursuant to California Code of Civil Procedure § 410.10.

9. Defendant Nellie's is subject to the personal jurisdiction of this Court because Nellie's is a California corporation.

10. Pursuant to 28 U.S.C. § 1391(c), Octane and Nellie's are deemed to reside in this judicial district for purposes of venue.

11. Venue is proper in this judicial district pursuant to, at least, 28 U.S.C. § 1391(b) and 28 U.S.C. § 1400(b). In particular, acts of infringement by Defendants have occurred within this Division of the Court.

Appendix B

III. FACTUAL BACKGROUND

12. ICON is an award-winning innovator in the field of exercise equipment and provides a variety of consumer products.

13. Many of the technological innovations owned by ICON are protected by a portfolio of utility and design patents, including United States Patent Nos. 5,104,120 and 6,019,710 (the "Asserted Patents"), true and correct copies of which are attached hereto respectively as Exhibit A and Exhibit B.

14. ICON is the owner by assignment of the Asserted Patents.

15. ICON has not licensed Octane or Nellie's to practice the Asserted Patents, and neither Octane nor Nellie's has any right or authority to license others to practice the Asserted Patents.

IV. FIRST CLAIM FOR RELIEF

Infringement by Octane of the Asserted Patents

16. By this reference ICON realleges and incorporates the foregoing paragraphs 1 through 15, as though fully set forth herein.

17. ICON alleges on information and belief that Octane has infringed and continues to infringe the Asserted Patents by making, using, selling, offering

for sale within the United States, or importing into the United States systems and products that embody one or more of the claims of the Asserted Patents, or by contributing to infringement, inducing others to infringe the Asserted Patents, or carrying out acts constituting infringement under 35 U.S.C. § 271(f). By way of example and not limitation, one such act of infringement is Octane's manufacture and sale of the Octane Fitness Q47 Series exercise device.

18. ICON alleges on information and belief that, unless and until enjoined by this Court, Octane will continue to infringe the Asserted Patents.

19. The conduct of Octane as set forth hereinabove gives rise to a claim for infringement of the Asserted Patents, pursuant to at least 35 U.S.C. §§ 271 and 281.

20. ICON alleges on information and belief that Octane will continue to infringe the Asserted Patents subsequent to receiving notice of the initiation of this action despite an objectively high likelihood that its actions constitute infringement, thereby making its actions both willful and deliberate.

21. By reason of the foregoing, ICON is entitled to injunctive and monetary relief against Octane, pursuant to 35 U.S.C. §§ 283, 284, and 285.

Appendix B

V. SECOND CLAIM FOR RELIEF

Infringement by Nellie's of the Asserted Patents

22. By this reference ICON realleges and incorporates the foregoing paragraphs 1 through 21, as though fully set forth herein.

23. ICON alleges on information and belief that Nellie's has infringed and continues to infringe the Asserted Patents by making, using, selling, offering for sale within the United States, or importing into the United States, systems and/or products that embody one or more of the claims of the Asserted Patents, or by contributing to infringement, inducing others to infringe the Asserted Patents, or carrying out acts constituting infringement under 35 U.S.C. § 271(f). By way of example and not limitation, one such act of infringement is Nellie's' sale of the Octane Fitness Q47 Series exercise device.

24. ICON alleges on information and belief that, unless and until enjoined by this Court, Nellie's will continue to infringe the Asserted Patents.

25. The conduct of Nellie's as set forth hereinabove gives rise to a claim for infringement of the Asserted Patents, pursuant to at least 35 U.S.C. §§ 271 and 281.

26. ICON alleges on information and belief that Nellie's will continue to infringe the Asserted Patents subsequent to receiving notice of the initiation of this action despite an objectively high likelihood that its actions

constitute infringement, thereby making its actions both willful and deliberate .

27. By reason of the foregoing, ICON is entitled to injunctive and monetary relief against Nellie's, pursuant to 35 U.S.C. §§ 283, 284, and 285.

VI. PRAYER FOR RELIEF

WHEREFORE, ICON prays for judgment against Defendants as follows:

A. A judgment finding Defendants liable for infringement of the Asserted Patents;

B. An Order of this Court pursuant to at least 35 U.S.C. § 283 permanently enjoining Defendants, their agents and servants, and any and all parties acting in concert with any of them, from: directly or indirectly infringing in any manner the Asserted Patents, whether by making, using, selling, offering to sell, or importing into the United States any product falling within the scope of any of the claims of the Asserted Patents; engaging in acts constituting contributory infringement of any of the claims of the Asserted Patents; or inducing others to engage in any of the aforementioned acts or otherwise;

C. An Order of this Court pursuant to at least 35 U.S.C. § 283 directing Defendants to destroy their entire stock of infringing products within the United States;

D. An award of damages to ICON, in an amount to be proven at trial, pursuant to at least 35 U.S.C. § 284;

E. Trebling of ICON's damages in view of the willful infringement by Defendants, and the award of such trebled damages to ICON, pursuant to at least 35 U.S.C. § 284;

F. An award to ICON of prejudgment interest, pursuant to at least 35 U.S.C. § 284;

G. An award to ICON of its costs in bringing this action, pursuant to at least 35 U.S.C. § 284, and Rule 54(d)(1) of the Federal Rules of Civil Procedure;

H. That this be declared an exceptional case, and that ICON be awarded its attorneys' fees and expenses, pursuant to at least 35 U.S.C. § 285;

I. An award of post-judgment interest, pursuant to at least 28 U.S.C. § 1961(a); and

J. For such other and further relief as the Court deems just, proper, and equitable.

VII. DEMAND FOR JURY

ICON demands TRIAL BY JURY of all causes so triable.

Appendix B

DATED: April 22, 2008

Sterling A. Brennan
Larry R. Laycock
David R. Wright
R. Parrish Freeman
WORKMAN NYDEGGER
A PROFESSIONAL CORPORATION

Dean J. Zipser
Adina L. Witzling
MORRISON & FOERSTER LLP

By /s/_____
Sterling A. Brennan
Attorney for Plaintiff
ICON HEALTH & FITNESS, INC.

Appendix B

See Supplemental Appendix at Pages SA-1 & SA-10

EXHIBIT A TO COMPLAINT -
U.S. PATENT NO. 5,104,120 (SA-1)

EXHIBIT B TO COMPLAINT -
U.S. PATENT NO. 6,019,710 (SA-10)

APPENDIX C — CIVIL MINUTES OF IN CHAMBERS ORDER BY JUDGE CORMAC J. CARNEY: GRANTING MOTIONS TO SEVER AND TRANSFER

UNITED STATES DISTRICT COURT CENTRAL DISTRICT OF CALIFORNIA

CIVIL MINUTES – GENERAL

Case No. SACV 08-00437-CJC(RNBx)
Date: November 3, 2008

Title: ICON HEALTH & FITNESS INC. v. OCTANE FITNESS LLC, and NELLIE'S EXERCISE EQUIPMENT, INC.

PRESENT:
HONORABLE CORMAC J. CARNEY,
UNITED STATES DISTRICT JUDGE

Michelle Urie
Deputy Clerk

N/A
Court Reporter

ATTORNEYS PRESENT FOR PLAINTIFF:
None Present

ATTORNEYS PRESENT FOR DEFENDANT:
None Present

Appendix C

PROCEEDINGS: (IN CHAMBERS) ORDER GRANTING DEFENDANTS' MOTIONS TO SEVER AND DEFENDANTS' MOTION TO TRANSFER [filed 10/10/08]

Defendants Octane Fitness, LLC, ("Octane") and Nellie's Exercise Equipment, Inc. ("Nellie's") (collectively "Defendants") move pursuant to Federal Rule of Civil Procedure 21 to sever their cases and transfer the case against Octane to the District of Minnesota. For the following reasons, the motions are GRANTED.

FACTUAL BACKGROUND

This case arises from a patent suit filed by Plaintiff Icon Health & Fitness ("Icon") against the Defendants. Icon alleges that Octane infringed two patents for exercise equipment, U.S. Patent No. 5,104,120 (the " '120 Patent") and U.S. Patent No. 6,019,710 (the " '710 Patent") (collectively the "Patents"), by designing, manufacturing and marketing infringing exercise equipment. (Compl.) Icon also alleges that Nellie's infringed the Patents by marketing and teaching customers how to use Octane's infringing equipment. (Compl. ¶ 23.) Icon has its principal place of business in Utah and is a Delaware corporation. (Compl. ¶ 1.) Octane has its principal place of business in Minnesota and is chartered in Minnesota. (Compl. ¶ 2.) Nellie's, a business that sells exercise equipment to individuals and companies, has its principal place of business in and is chartered in California, with no locations in other states. (Compl. ¶ 3.) Defendants have filed suit against Icon in the District of Minnesota for a declaratory judgment on

the same patent issues. Defendants now move to sever the cases against Octane and Nellie's, and transfer the action between Octane and Icon to the District of Minnesota, leaving the action between Nellie's and Icon in the Central District of California.

ANALYSIS

1) Severance

The Court may grant a severance of a peripheral defendant so the primary defendant in an action may be transferred to a more convenient forum. *See Wyndham Assoc. v. Bintliff*, 398 F.2d 614, 618-20 (2nd Cir. 1968). In *Wyndham*, the Second Circuit allowed the severance and transfer of a securities law case so that the bulk of the issues in the case could be heard in a court where a concurrent action on the same facts was already being heard. *Wyndham*, 398 F.2d at 619. The actions at the heart of the suit—a market-manipulation conspiracy—largely occurred in Texas while the suit to be transferred was filed in New York. The Second Circuit explained that its decision was in the interests of justice:

> We believe that where the administration of justice would be materially advanced by severance and transfer, a district court may properly sever the claims against one or more defendants for the purpose of permitting the transfer of the action against the other defendants, at least in cases where, as here, the defendants as to whom venue would not be proper

> in the transferee district are alleged to be only indirectly connected to the manipulations which form the main subject matter of the action.

Wyndham, 398 F.2d at 619-20.

Courts have reached similar results in patent cases involving designer/manufacturers and distributors or users of products, finding that the distributors were peripheral to designer/manufacturers in order to transfer the case to a district geographically closer to the designer manufacturer. The Fourth Circuit, in *Leesona Corp. v. Cotwool Mfg. Corp., Judson Mills Division*, severed a licensor and user of an allegedly infringing machine—in a suit that alleged infringement of both patents on the design of a machine and a method patent—so it could transfer the action against the machine's manufacturer to a location closer to that manufacturer's home district, where a declaratory judgment had been filed. *Leesona*, 308 F.2d 895, 896-99 (4th Cir. 1962). In *Corry v. CFM Majestic Inc.*, the court severed a distributor from a manufacturer when "the distributor (i) was only secondarily involved, (ii) did not manufacture the alleged infringing device and (iii) would be liable only if the main defendant was found to be infringing the patent." *Corry*, 16 F. Supp. 2d 660, 666 (E.D. Va. 1998).

In this case, the claims against Nellie's are peripheral to the claims against Octane. Nellie's is merely a distributor of Octane's equipment. Nellie's is not likely to be found to be infringing the patents at issue if Octane is absolved of infringement. It is not alleged that Nellie's designed or manufactured the infringing exercise machines, but that it

merely distributed them. Icon argues that Nellie's may have induced its customers to infringe its patent on a method of controlling exercise machines, separate from any liability Nellie's may incur from selling Octane's allegedly infringing machines. However, the method described in the patent is merely adjusting the resistance of an exercise machine to vary the intensity of a workout. ('120 Patent at 13-14.) It is unlikely that oral instruction on this matter by Nellie's staff would infringe if similar instruction included in the Octane users' manual did not.

The main issue in this case is whether the machines designed by Octane and distributed by Nellie's infringe Icon's patents on similar devices. Octane is the party in the best position to provide evidence of the design and nature of the device and the process of designing it. This issue is likely to be resolved in the action between Octane and Icon—two national designer/manufacturers—not in the action between Icon and Nellie's, that is merely a distributor doing business solely in California. Therefore, Nellie's is a peripheral defendant to this case and can be severed.

2) Transfer

Defendants move to transfer this action to the District of Minnesota subject to 28 U.S.C. § 1404(a), which states: "For the convenience of parties and witnesses, in the interest of justice, a district court may transfer any civil action to any other district or division where it might have been brought." 28 U.S.C. § 1404(a).

Two findings are required to for proper transfer: (1) that the transferee district court is one where the action might

have been brought; and (2) the convenience of the parties and witnesses, and the interest of justice favor transfer. *Hatch v. Reliance Insurance Co.*, 758 F.2d 408, 414 (9th Cir. 1985). District courts have discretion to adjudicate motions for transfer on an individualized, case-by-case basis. *Jones v. GNC Franchising Co.*, 211 F.3d 495, 498 (9th Cir. 2000). The Ninth Circuit has held that a "defendant must make a strong showing of inconvenience to warrant upsetting the plaintiff's choice of forum" because a plaintiff's choice of forum is afforded substantial weight. *Decker Coal Co. v. Commonwealth Edison Co.*, 805 F.2d 834, 843 (9th Cir. 1986).

A) Jurisdiction and Venue

This action might have been brought in the District of Minnesota because the District of Minnesota has subject matter and personal jurisdiction over Octane and it is a proper venue for this action. There is subject matter jurisdiction in this case because it involves a federal question of patent law. 28 U.S.C. § 1331. Octane is also subject to personal jurisdiction in the District of Minnesota. Octane has significant contacts with the state of Minnesota to justify jurisdiction. Octane is a company that is domiciled in Minnesota and has its facilities there. Finally, Minnesota is an appropriate venue for the action. A civil action that is not founded solely on diversity may be brought in "a judicial district in which a substantial part of the events . . . giving rise to the claim occurred." 28 U.S.C. § 1391(b). In this case, the machines alleged to infringe Octane's patents were designed in and distributed from Minnesota. Thus, a substantial part of the events giving rise to this patent dispute occurred in Minnesota.

Appendix C

B) Convenience and Justice

Transfer to Minnesota is also appropriate because it "promotes the convenience of parties and witnesses" and furthers "the interests of justice." The relevant factors to be considered in analyzing the convenience of a particular forum are: (1) the location where the relevant agreements were negotiated and executed, (2) the state that is most familiar with the governing law, (3) the plaintiff's choice of forum, (4) the respective parties' contacts with the forum, (5) the contacts relating to the plaintiff's cause of action in the chosen forum, (6) the differences in the costs of litigation in the two forums, (7) the availability of compulsory process to compel attendance of unwilling non-party witnesses, and (8) the ease of access to sources of proof. *Jones v. GNC Franchising, Inc.*, 211 F.3d 495, 498 (9th Cir. 2000) (*citing Stewart*, 487 U.S. at 29).

These factors militate in favor of transfer to Minnesota. Minnesota is a more convenient forum for this case than California. Octane designed and received the allegedly infringing devices within that state. The relevant witnesses, including in-house and outside design staff and consultants for Octane are located in Minnesota, as are the pertinent documents. (Decl. of Timothy Porth, ¶¶ 3-5.) Octane has only two employees in California; both are salespeople who work out of their homes. (*Id.* ¶ 4.) Further, Minnesota is likely no more inconvenient to plaintiffs than California. Icon is located in Utah. (Compl. ¶ 1.) Although Icon states it has numerous employees in sales and distribution in California, it has not submitted evidence showing that its witnesses for trial reside here. Nor has it submitted

evidence that it keeps its relevant documents in California. Because the relevant evidence and witnesses are apparently not in California, it is unlikely that Minnesota will be a less convenient forum for Icon than California. Although the plaintiff's choice of venue is ordinarily afforded deference, the bulk of this suit bears very little relation to California and the Court sees no reason for keeping it here.

Transferring the action to Minnesota also furthers the interests of justice. The governing law in this case is federal patent law; any district is equally competent with this body of law. There is also a similar case filed in Minnesota, so the interests of judicial economy favor transferring this case there so the parties can resolve all of their disputes in one forum.

CONCLUSION

For the foregoing reasons, Defendants' motions to sever and transfer to the District of Minnesota are GRANTED. The parties are instructed to notify the Court by November 17, 2008, apprising the Court as to whether the claims against Nellie's will be added to the case pending in the District of Minnesota.

APPENDIX D — CIVIL MINUTES OF IN CHAMBERS ORDER BY JUDGE CORMAC J. CARNEY: DISMISSING CASE

UNITED STATES DISTRICT COURT
CENTRAL DISTRICT OF CALIFORNIA

CIVIL MINUTES – GENERAL

Case No. SACV 08-00437-CJC(RNBx)
Date: January 23, 2009

Title: ICON HEALTH & FITNESS INC. v. OCTANE FITNESS LLC, and NELLIE'S EXERCISE EQUIPMENT, INC.

PRESENT:
HONORABLE CORMAC J. CARNEY, UNITED STATES DISTRICT JUDGE

Michelle Urie
Deputy Clerk

N/A
Court Reporter

ATTORNEYS PRESENT FOR PLAINTIFF:
None Present

ATTORNEYS PRESENT FOR DEFENDANT:
None Present

Appendix D

PROCEEDINGS: (IN CHAMBERS)
ORDER DISMISSING CASE

In light of the notice from Plaintiff Icon Health & Fitness, Inc., filed on November 17, 2008, that it intends to pursue its claims against Nellie's Exercise Equipment, Inc., in the District of Minnesota, this case is DISMISSED.

APPENDIX E — STIPULATION FOR DISMISSAL OF ALL CLAIMS RELATING TO U.S. PATENT NO. 5,104,120

IN THE UNITED STATES DISTRICT COURT
FOR THE DISTRICT OF MINNESOTA
FOURTH DIVISION

Case No.: 0:09-cv-00319 (ADM/SRN)

ICON HEALTH & FITNESS, INC.,
a Delaware Corporation,

Plaintiff,

vs.

OCTANE FITNESS, LLC,
a Minnesota limited liability company,

Defendant.

STIPULATION FOR DISMISSAL OF ALL CLAIMS RELATING TO U.S. PATENT NO. 5,104,120

Pursuant to Fed. R. Civ. P. 41(a)(1)(ii), the parties to the above-captioned action hereby stipulate to the dismissal with prejudice of any and all claims against the other, asserted or unasserted, relating to United States Patent No. 5,104,120, including without limitation plaintiff's claims of infringement and defendant's counterclaims of invalidity and unenforceability.

Appendix E

Stipulated to on May 27, 2009,

By: /s/R. Parrish Freeman, Jr.
Lawrence M. Shapiro
Jeanette M. Bazis
GREENE ESPEL, PLLP
200 South 6th Street
Suite 1200
Minneapolis, MN 55402-1415

Larry R. Laycock
David R. Wright
R. Parrish Freeman, Jr.
H. Craig Hall, Jr.
WORKMAN NYDEGGER PC
1000 Eagle Gate Tower
60 East South Temple
Salt Lake City, Utah 84111

Attorneys for Plaintiff
ICON HEALTH & FITNESS, INC.

By: /s/Matthew L. Cutler
Michael S. Sherrill
SHERRILL LAW OFFICES, PLLC
4756 Banning Avenue, Suite 212
White Bear Lake, MN 55110

Appendix E

Rudolph A. Telscher, Jr.
Matthew L. Cutler
HARNESS DICKEY AND PIERCE
7700 Bonhomme Avenue, Suite 400
St. Louis, MO 63105

Attorneys for Defendant
OCTANE FITNESS, LLC

APPENDIX F — DEFENDANT OCTANE FITNESS' PROPOSED CLAIM CONSTRUCTIONS, DATED SEPTEMBER 14, 2009

IN THE UNITED STATES DISTRICT COURT
FOR THE DISTRICT OF MINNESOTA
FOURTH DIVISION

Case No: 0:09-cv-00319 (ADM/SRN)

ICON HEALTH & FITNESS, INC.,
a Delaware corporation,

Plaintiff,

vs.

OCTANE FITNESS, LLC,
a Minnesota limited liability company,

Defendant.

DEFENDANT OCTANE FITNESS' PROPOSED CLAIM CONSTRUCTIONS

Pursuant to the Court's Scheduling Order, and the concurrently filed Motion for Extension of Time, Defendant Octane Fitness, LLC ("Octane"), hereby submits its proposed claim constructions and disclosure of the expert witness it proposes calling at the *Markman* hearing, with summary of each opinion he will offer:

Claim Elements from '710 Patent that Should be Construed by the Court	Octane's Proposed Claim Construction
Claim 1, element (d): means for connecting each stroke rail to the frame such that linear reciprocating displacement of the first end of each stroke rail results in displacement of the second end of each stroke rail in a substantially elliptical path; and	The function recited in this element, "connects each stroke rail to the frame such that linear reciprocating displacement of the first end of each stroke rail results in displacement of the second end of each stroke rail in a substantially elliptical path," requires no construction, as the plain and ordinary meanings of the terms used to describe the function are sufficiently clear. The structure from the specification of the '710 patent that corresponds to this function is: 1) Pin 76 (and the corresponding pin on the opposite side of the frame from pin 76, that is not labeled); 2) Nut 78 (and the corresponding nut on the opposite side of the frame from nut 78, that is not labeled);

	3) Flared head 82 (and the corresponding flared head on the opposite side of the frame from flared head 82, that is not labeled); 4) C-shaped channel 84 (and the corresponding C-shaped channel on the opposite side of the frame from C-shaped channel 84, that is not labeled); 5) Axle 92; 6) Crank arms 98 and 100; 7) Nuts 94 and 96; 8) Pins 104 and 105 (pin 105 is not labeled in the Figures of the '710 patent); 9) Collars 106 and 107 (collar 107 is not labeled in the Figures of the '710 patent); 10) Spot welds that hold the two collars, referenced in 9) above, to the stroke rails 66 and 68; and 11) Nuts/washers at the end of pins 104 and 105.

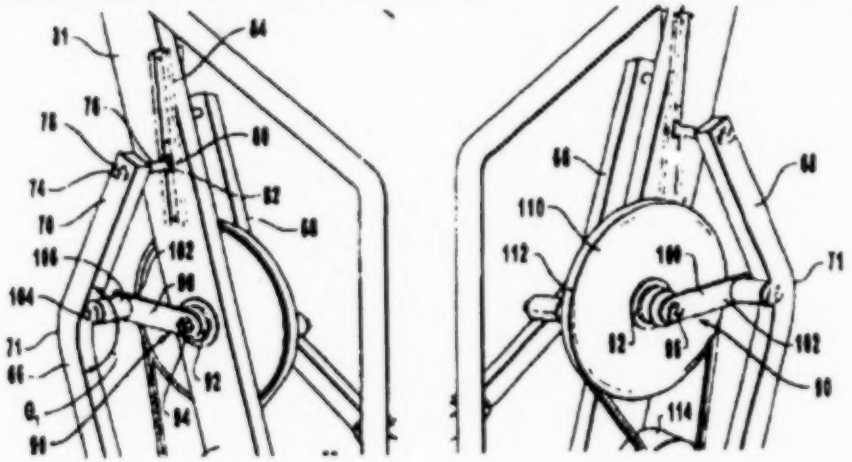

The intrinsic evidence that supports this claim construction includes: (a) '710 patent at column 4, lines 3-61; (b) Figures 1-5; (c) '710 patent at column 2, lines 12-21; (c) '710 patent at column 2, lines 26-27; and (d) Patent Office examiner's Reasons for Allowance, including the statement that "[t]he prior art fails to show or teach applicant's claimed apparatus comprising...a pair of stroke rails each having one end hingedly connected to a respective foot rail ***and having the opposite end connected to the frame for linear reciprocating movement and for producing an elliptical path.***" (emphasis added).

Claim 1, element (e) means for selectively varying the size of the substantially elliptical path that the second end of each stroke rail travels.	The function recited in this element, "selectively varying the size of the substantially elliptical path that the second end of each stroke rail travels," requires no construction, as the plain and ordinary meanings of the terms used to describe the function are sufficiently clear. There are two embodiments disclosed in the '710 patent that contain structure that corresponds to this function. The first embodiment is referred to herein as the "Manual Adjustment Arm Embodiment" and is shown in Figure 5. The structure from this embodiment that corresponds to the above-referenced function is: 1) Adjustment arm 142 (and the corresponding adjustment arm on the opposite side of the frame from adjustment arm 142, that is not shown in the Figures of the '710 patent); 2) Plurality of holes 148 (and the corresponding plurality of holes on the adjustment arm located on the opposite side of the frame from adjustment arm 142, that is not shown in the Figures of the '710 patent);

	3) Complementary hole 150 located in stroke rail 66 (and the corresponding complementary hole in stroke rail 68, that is not shown in the Figures of the '710 patent); 4) Pin 152 (and the corresponding pin located on the opposite side of the frame from pin 152, that is not shown in the Figures of the '710 patent); 5) Pin 76 (and the corresponding pin on the opposite side of the frame from pin 76, that is not labeled); 6) Nut 78 (and the corresponding nut on the opposite side of the frame from nut 78, that is not labeled); 7) Flared head 82 (and the corresponding flared head on the opposite side of the frame from flared head 82, that is not labeled); and 8) C-shaped channel 84 (and the corresponding C-shaped channel on the opposite side of the frame from C-shaped channel 84, that is not labeled).

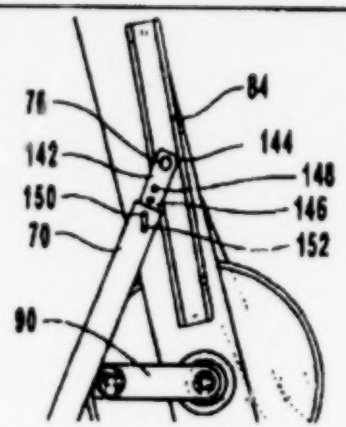

The second embodiment is referred to herein as the "Motorized Adjustment Arm Embodiment" and is shown in Figure 6. The structure from this embodiment that corresponds to the above-referenced function is:

1) Electric motor 154 (and the corresponding electric motor located on the opposite side of the frame from electric motor 154, that is not shown in the Figures of the '710 patent);

2) Bracket 156 (and the corresponding bracket located on the opposite side of the frame from bracket 156, that is not shown in the Figures of the '710 patent)

	3) Gear 158 (and the corresponding gear located on the opposite side of the frame from gear 158, that is not shown in the Figures of the '710 patent); 4) Elongated engagement bar 160 (and the corresponding elongated engagement bar located on the opposite side of the frame from elongated engagement bar 160, that is not shown in the Figures of the '710 patent); 5) Teeth 164 (and the corresponding teeth located on the opposite side of the frame from teeth 164, that are not shown in the Figures of the '710 patent); 6) Adjustment arm 142 (and the corresponding adjustment arm located on the opposite side of the frame from adjustment arm 142, that is not shown in the Figures of the '710 patent); 7) Rod that connects elongated engagement bar 160 to adjustment arm 142 (and the corresponding rod located on the opposite side of the frame from the rod that connects elongated engagement bar 160 to adjustment arm 142, that is not shown in the Figures of the '710 patent);

	8) Bias mechanism that biases engagement bar 160 against gear 158 (and the corresponding bias mechanism located on the opposite side of the frame from engagement bar 160 and gear 158, that is not shown in the Figures of the '710 patent); 9) Pin 76 (and the corresponding pin on the opposite side of the frame from pin 76, that is not labeled); 10) Nut 78 (and the corresponding nut on the opposite side of the frame from nut 78, that is not labeled); 11) Flared head 82 (and the corresponding flared head on the opposite side of the frame from flared head 82, that is not labeled); and 12) C-shaped channel 84 (and the corresponding C-shaped channel on the opposite side of the frame from C-shaped channel 84, that is not labeled).

	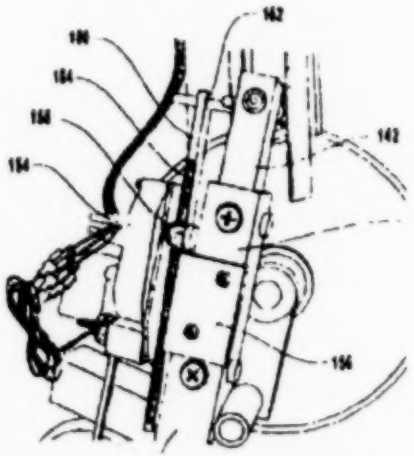 The intrinsic evidence that supports this claim construction includes: (a) '710 patent at column 6, lines 8-67; (b) Figures 5-6; (c) '710 patent at column 2, lines 42-53; (c) '710 patent at column 4, lines 3-17; and (d) Patent Office examiner's Reasons for Allowance, including the statement that "[t]he prior art fails to show or teach applicant's claimed apparatus comprising...a pair of stroke rails each having one end hingedly connected to a respective foot rail and having the opposite end connected to the frame for linear reciprocating movement and for producing an elliptical path."

	The function recited in this element, "coupling each crank arm to a corresponding stroke rail so as to enable free rotation of the axle," requires no construction, as the plain and ordinary meanings of the terms used to describe the function are sufficiently clear. The structure from the specification of the '710 patent that corresponds to this function is: 1) Pins 104 and 105 (pin 105 is not labeled in the Figures of the '710 patent); 2) Collars 106 and 107 (collar 107 is not labeled in the Figures of the '710 patent); 3) Spot welds that hold the two collars, referenced in 2) above, to the stroke rails 66 and 68; and 4) Nuts/washers at the end of pins 104 and 105.

Claim 2, element (iii) means for coupling each crank arm to a corresponding stroke rail so as to enable free rotation of the axle.	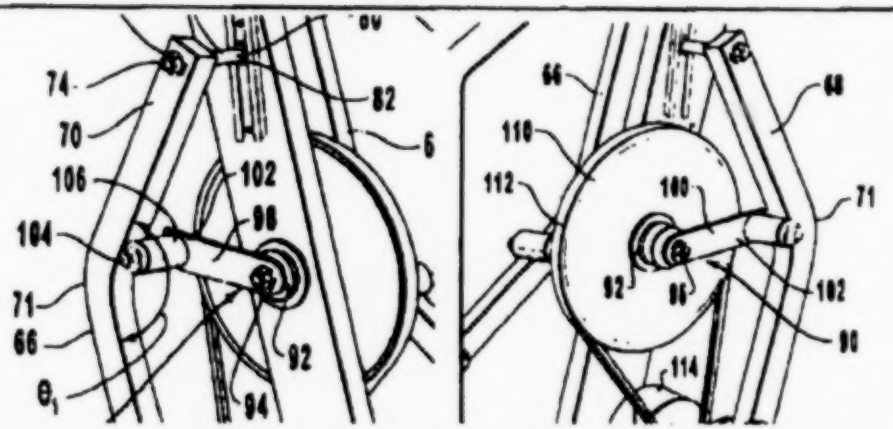 The intrinsic evidence that supports this claim construction includes: (a) '710 patent at column 4, lines 43-56; (b) Figures 1-5; (c) '710 patent at column 2, lines 18-21; (c) Patent Office examiner's Reasons for Allowance, including the statement that "[t]he prior art fails to show or teach applicant's claimed apparatus comprising...a pair of stroke rails each having one end hingedly connected to a respective foot rail and having the opposite end connected to the frame for linear reciprocating movement and for producing an elliptical path."

Appendix F

Witness Octane Proposes to Call

Pursuant to the Court's Scheduling Order, and following Octane's disclosure to Icon on September 10, 2009, of the fact that it proposes calling Steve Lenz as an expert witness as part of the *Markman* process (including a brief description of the substance of Mr. Lenz's proposed testimony), Octane offer the following summary of each opinion Mr. Lenz will offer in sufficient detail to permit a meaningful deposition of Mr. Lenz:

Background

1) Mr. Lenz's technical background, including the fact that he has worked in the fitness equipment industry since 1993, including designing elliptical machines.

2) The basic functionality of elliptical machines, including how they work and how they are designed.

3) The differences between the type of linkage (structure that connects the foot rails to the frame of an elliptical) disclosed in the '710 patent and other types of linkages found in commercially available elliptical machines.

4) The types of issues that an elliptical machine designer faces in designing an elliptical machine, including 1) optimizing the smoothness and feel of the machine, 2) minimizing noise, 3) minimizing the "envelope" in which the machine's linkage operates to decrease the overall size of the machine, 4) minimizing cost of manufacture

of the machine, 5) maximize life span of the machine by minimizing wear, and 6) create a machine with pleasing aesthetics.

Claim Construction

1) ***Regarding Claim 1, element (d),*** the function recited in this element contains terms that are clear and understandable, not only for those who work in the fitness equipment industry, but also for a lay person. The function simply requires that the first end of the stroke rail move linearly and that such linear displacement result in the second end of the stroke rail moving in a substantially elliptical manner.

2) The structure that is necessary to allow this function to occur is that listed above in Octane's claim construction for this term. All the structure listed by Octane is necessary for the elliptical machine disclosed in the '710 patent to perform the stated function. For example, without the pin 76, nut 78, flared head 82 and c-shaped channel 84, shown in Figure 1 of the '710 patent, the first end of the stroke rail will not move linearly.

3) Mr. Lenz also intends to review and analyze the proposed claim constructions to be submitted by Icon relevant to this limitation and provide his opinion regarding the propriety of such construction.

4) ***Regarding claim 1, element (e),*** the function recited in this element contains terms that are clear and understandable, not only for those who work in the fitness

equipment industry, but also for a lay person. The function simply requires the varying of the size of the elliptical path that the second end of each stroke rail travels.

5) The structure that is necessary to allow this function to occur is that listed above in Octane's claim construction for this term. All the structure listed by Octane is necessary for the elliptical machine disclosed in the '710 patent to perform the stated function. For example, without the pin 76, nut 78, flared head 82 and c-shaped channel 84, shown in Figure 1 of the '710 patent, the second end of the stroke rail will not move in a substantially elliptical path and the elliptical path that the second end of the stroke rail travels will not vary.

6) Mr. Lenz also intends to review and analyze the proposed claim constructions to be submitted by Icon relevant to this limitation and provide his opinion regarding the propriety of such construction.

7) ***Regarding claim 2, element (iii),*** the function recited in this element contains terms that are clear and understandable, not only for those who work in the fitness equipment industry, but also for a lay person. The function simply requires that the crank arm be coupled to a corresponding stroke rail so that the axle can rotate freely.

8) The structure that is necessary to allow this function to occur is that listed above in Octane's claim construction for this term. All the structure listed by Octane is necessary for the elliptical machine disclosed in the '710 patent to perform the stated function.

Appendix F

9) Mr. Lenz also intends to review and analyze the proposed claim constructions to be submitted by Icon relevant to this limitation and provide his opinion regarding the propriety of such construction.

DATED: September 14, 2009

By /s/_____
Rudolph A. Telscher, Jr., Esq.
Matthew L. Cutler, Esq.
HARNESS DICKEY AND PIERCE
7700 Bonhomme Avenue, Suite 400
St. Louis, MO 63105

Attorneys for Defendants
Octane Fitness, LLC

APPENDIX G — ICON'S SUPPLEMENTAL CLAIM CHART, DATED OCTOBER 23, 2009

IN THE UNITED STATES DISTRICT COURT
FOR THE DISTRICT OF MINNESOTA
FOURTH DIVISION

Case No: 0:09-cv-00319 (ADM/SRN)

ICON HEALTH & FITNESS, INC.,
a Delaware corporation,

Plaintiff,

vs.

OCTANE FITNESS, LLC, a Minnesota limited liability company,

Defendant.

PLAINTIFF ICON HEALTH & FITNESS, INC.'S SUPPLEMENTAL CLAIM CHART

ICON Health & Fitness, Inc. ("ICON") submits the following supplement to Plaintiff's Claim Chart previously submitted to defendant Octane Fitness, LLC ("Octane") on July 23, 2009. This supplement is submitted to clarify ICON's earlier identification of Octane's Q45 family of elliptical exercise devices as infringing products and is occasioned by Octane's recent production of documents and things related to, *inter alia*, its Q45 family of elliptical exercise devices. Discovery is ongoing and Octane has not yet completed its production of documents. As a result,

Appendix G

ICON has not yet deposed any Octane witnesses. Accordingly, ICON reserves the right to amend or modify the following contentions based on additional evidence produced by Octane or disclosed by Octane witnesses. ICON also reserves the right to amend or modify the following contentions to comport with the Court's anticipated claim construction ruling.

(1) Claims ICON Alleges are Infringed by Octane

ICON presently asserts that claims 1–5, 7 and 9–11 ("asserted claims") of U.S. Patent No. 6,019,710 ("710 patent") are literally[1] infringed by Octane.

(2) Specific Octane Products ICON Alleges Infringe the Asserted Claims

ICON alleges that Octane's Q45 and Q47 families of products literally infringe the asserted claims. These products include the Q45, Q45e, Q45ce, Pro450, Pro4500, Q47, Q47e, Q47ce and Pro4700 elliptical machines ("accused products"). Reference to "Q45" below means Q45, Q45e, Q45ce, Pro450 and Pro4500. Reference to "Q47" below means Q47, Q47e, Q47ce and Pro4700.

---

1. ICON contends that each asserted claim is literally infringed. In the event it is found that literal infringement is not present, ICON reserves the right to contend that each such claim would be infringed under the doctrine of equivalents and reserves the right to present evidence that any alleged differences between the claimed element and accused structure are insubstantial, known to be interchangeable and/or perform the same function in the same way to achieve the same result.

Appendix G

(3) Identification of Where Asserted Claim Elements are Present in Accused Products and Basis for Contention that Identified Elements are Present.

These assertions are based upon information currently available to ICON, including, *inter alia*, inspection of actual Q47e and Pro 4500 elliptical machines, Octane's partial document production, Octane's Answers to Interrogatories, and Octane's statements that the relevant mechanism for the accused products are the same within each family of products. ICON's contentions reference engineering documents recently produced by Octane.[2] ICON has not yet, however, had an opportunity to depose Octane about the application of the engineering documents to specific products. Therefore, reference to these documents is intended only to clarify the basis for ICON contentions and not to limit its contentions to the *specific* part(s) shown in the cited documents.

---

2. All citations are to documents with Octane control numbers (i.e., p. 1 = OCTANE 000001). Capitalized terms in the "Accused Products" column are terms found in the cited engineering documents.

Appendix G

'710 patent	Accused Products
1. An exercise apparatus comprising:	All accused products are exercise apparatuses.
(a) a frame configured for resting on a ground surface;	The frame of the Q47 includes portions of the Main Frame, the Tracks or Rails and the Console Mast. For the Q45, the frame includes portions of the Lower Frame, Tracks and Mast *(e.g.*, pp. 88, 90–91, 312, 21150, 21338, 21340, 21344). The frame of the accused products rests on a ground surface.
(b) a pair of spaced apart foot rails each having a first end and an opposing second end, each foot rail being configured to receive a corresponding foot of a user;	As foot rails the accused products include a pair of Pedal Lever Assembl[ies] (Q47) or Pedal Assembl[ies] (Q45), each having two opposing ends. The end of these foot rails terminating at the pedal is the second end; the other end of these foot rails is the first end. The pedals of these foot rails are configured to receive a corresponding foot of a user (*e.g.*, p. 315, 21162, 21340).

Appendix G

(c) a pair of stroke rails each having a first end and an opposing second end, the second end of each stroke rail being hingedly attached to the first end of a corresponding foot rail;	The stroke rails of the Q45 are the 3P Actuator Links. These stroke rails have two ends, a first end and a second end. The second end of the stroke rail is the end hingedly attached to the first end of a corresponding foot rail. The first end of the stroke rail is the opposite end (*e.g.*, pp. 21175, 21340). The stroke rails of the Q47 are the Actuator Link Castings. These castings have two ends, a first end and a second end. The second end of the stroke rail is the end hingedly attached to the first end of a corresponding foot rail. The first end of the stroke rail terminates at the region near the Base Clevises (*e.g.*, p 339). In the alternative, the stroke rails of the Q47 also include the Actuator Swing Arm and/or Actuator Motor With Integrated Screw. The second end of the stroke rail is the end attached to the first end of a foot rail. The first end of the stroke rail terminates at the region near the Base Clevises. These structures together are referred to by Octane as the Q47 3P Link Assembly (*e.g.*, p. 339).

Appendix G

(d) means for connecting each stroke rail to the frame such that linear reciprocating displacement of the first end of each stroke rail results in displacement of the second end of each stroke rail in a substantially elliptical path; and	The accused products include structure that performs the function of "connecting each stroke rail to the frame such that linear reciprocating displacement of the first end of each stroke rail results in displacement of the second end of each stroke rail in a substantially elliptical path." The 3P Actuator Links of the Q45 are attached to a pair of Crank Arms at the Crank Arm Shaft. Each Crank Arm is attached to the Hub Support portion of the frame by rigid attachment at opposing ends of a Crank Shaft that extends rotatably through the Crank Hub of the frame (*e.g.*, pp. 19738, 21150, 21175, 21344, 25795). In the Q47 the Actuator Link Castings are attached to Actuator Swing Arms which in turn are attached to Crank Arms at the Crank Arm Shaft. The Crank Arm Shafts extend through the Swing Arm Hubs of the Actuator Swing Arms. Each Crank Arm is also attached to the Crank Support portion of the frame by rigid

Appendix G

	attachment at opposing ends of a Crank Shaft that extends rotatably through the Crank Bearing Hub of the frame (*e.g.*, pp. 255, 297, 299, 321, 339). These structures result in displacement of the second end of each stroke rail in a substantially elliptical path given linear reciprocating displacement of the first end of each stroke rail. The structure described above is the same as, or equivalent to, the structure disclosed in the specification for performing the function of "connecting each stroke rail to the frame such that linear reciprocating displacement of the first end of each stroke rail results in displacement of the second end of each stroke rail in a substantially elliptical path."
(e) means for selectively varying the size of the substantially elliptical path that the second end of each stroke rail travels.	The accused products include structure that performs the function of "selectively varying the size of the substantially elliptical path that the second end of each stroke rail travels." The size of the elliptical path traveled by the second end of each stroke rail

Appendix G

	is selectively varied when the Integrated Screw (Q47) or Actuator Screw (Q45) is rotated by the electric Actuator Motor (*e.g.*, pp. 339, 347, 21175). The structure described above is the same as, or equivalent to, the structure disclosed in the specification for performing function of "selectively varying the size of the substantially elliptical path that the second end of each stroke rail travels."
2. An exercise apparatus as recited in claim 1, wherein the means for connecting comprises: (i) an axle having opposing ends, the axle being rotatably mounted to the frame; (ii) a crank arm rigidly mounted on each opposing end of the axle; and	The Crank Shaft of the accused products is an axle with opposing ends rotatably mounted to the frames by extending through the Crank Bearing Hub (Q47) and Crank Hub (Q45) of the respective frames. Both Crank Arms are rigidly mounted on each opposing end of the Crank Shaft (*e.g.*, pp. 255, 297, 299, 321, 339, 19738, 21344, 25795).

Appendix G

(iii) means for coupling each crank arm to a corresponding stroke rail so as to enable free rotation of the axle.	The accused products include structure that performs the function of "coupling each crank arm to a corresponding stroke rail so as to enable free rotation of the axle." The Crank Arms of the Q47 are coupled to a corresponding stroke rail by extension of the Crank Arm Shaft through Swing Arm Hub so as to enable free rotation of the axle. (*e.g.*, pp. 255, 297, 299, 321). The Crank Arms of the Q45 extend through a collar in the corresponding Actuator Link (*e.g.*, pp. 21339-42). The structure described above is the same as, or equivalent to, the structure disclosed in the specification for performing the "coupling each crank arm to a corresponding stroke rail so as to enable free rotation of the axle."

Appendix G

3. An exercise apparatus as recited in claim 2 wherein the means for coupling comprises, (i) a pin projecting from each crank arm; and (ii) a tubular sleeve rotatably disposed over each pin, each tubular sleeve being rigidly secured to a corresponding stroke rail.	The Crank Arm Shafts of the Q47 and Q45 are pins that project from each Crank Arm. In the Q47, a tubular sleeve, called a Swing Arm Hub, is rotatably disposed over the Crank Arm Shaft. The Swing Arm Hub is kept rigidly secured to the Swing Arm and to the Actuator Link Casting (*e.g.*, pp. 255, 297, 299, 321).[3] In the Q45, a tubular sleeve provided near the center of the Actuator Link is disposed over the Crank Arm Shaft (*e.g.*, pp. 21339-42.
4. An exercise apparatus as recited in claim 2, further comprising means for conserving momentum generated by rotation of the axle.	The accused products include structure that performs the function of "conserving momentum generated by rotation of the axle." A Flywheel is mounted to the Crank Shaft. The Flywheel forms a pulley around which a belt extends from the Flywheel to the drive wheel of a weighted wheel which is, in turn, mounted to the frame (*e.g.*, pp., 296, 297, 2288, 19738, 21342).

3. The rigid attachment to the Actuator Link Casting is adjustable by rotation of the Integrated Screw to adjust stride length.

Appendix G

	Rotation of the Flywheel rotates the weighted wheel through a belt. The weighted wheel rotates in a manner that the force created by such rotation is transferred back to the Flywheel to maintain rotation of the Flywheel and, as a result, the Crank Shaft. The structure described above is the same as, or equivalent to, the structure disclosed in the specification for performing the "conserving momentum" function.
5. An exercise apparatus as recited in claim 4, wherein the means for conserving momentum comprises: (a) a flywheel mounted to the [axle]; (b) a weighted wheel rotatably mounted to the frame; and (c) a belt extending from the flywheel to the weighted wheel.	The accused products have a Flywheel mounted to the Crank Shaft. The Flywheel forms a pulley around which a belt extends from the Flywheel to the drive wheel of a weighted wheel which is, in turn, mounted to the frame (*e.g.*, pp., 296, 297, 2288, 19738, 21342).

Appendix G

7. An exercise apparatus as recited in claim 1, wherein the frame comprises a pair of spaced apart tracks and a support stand upstanding there between.	The frame of the accused products includes a pair of Tracks or Rails. In the Q47 the Base Frame Center, Crank Support, Frame Top, Console Plate Mount and Console Mast of the frame form a support stand upstanding between the Tracks or Rails (*e.g.*, pp. 88, 90, 91, 255 and 312). In the Q45 the Lower Frame (including Hub Support) and Mast form a support stand upstanding between the Tracks (*e.g.*, pp. 21150, 21340).
9. An exercise apparatus as recited in claim 1, wherein each stroke rail is curved.	The structures corresponding to "stroke rails" identified in 1(c) above are curved.
10. An exercise apparatus as recited in claim 1, wherein each foot rail is curved.	The structures corresponding to "foot rails" identified in 1(b) above are curved.
11. An exercise apparatus as recited in claim 1, further comprising a wheel mounted on each foot rail and disposed on the frame.	The Pedal Lever Assemblies and Pedal Assemblies of the accused products include at least one wheel thereon and disposed on the Tracks or Rails of the frame (*e.g.*, pp. 88, 90, 91, 315, 21162).

Appendix G

Dated: October 23, 2009

WORKMAN NYDEGGER PC
/s/ C.J. Veverka
David R. Wright, UT Bar No. 5164
C.J. Veverka, UT Bar No. 7110
H. Craig Hall, Jr., UT Bar No. 8691
1000 Eagle Gate Tower
60 East South Temple
Salt Lake City, UT 84111
dwright@wnlaw.com
cveverka@wnlaw.com
chall@wnlaw.com
(801) 533-9800

and

GREENE ESPEL, P.L.L.P.

Lawrence M. Shapiro, Reg. No. 130886
Jeanette M. Bazis, Reg. No. 255646
200 S. Sixth Street, Suite 1200
Minneapolis, MN 55402
lshapiro@greeneespel.com
jbazis@greeneespel.com
(612) 373-0830

Attorneys for Plaintiff
ICON HEALTH & FITNESS, INC.

Appendix G

See Supplemental Appendix at Page SA-25

EXHIBIT A TO ICON'S SUPPLEMENTAL CLAIM CHART - OCTANE'S ENGINEERING DRAWINGS

APPENDIX H — EXCERPTS FROM J. RASTY DEPOSITION, DATED MAY 4, 2010

[1] UNITED STATES DISTRICT COURT
DISTRICT OF MINNESOTA
FOURTH DIVISION

CASE NO. 09-CV-00319 (ADM/SRN)

ICON HEALTH & FITNESS, INC.,
A DELAWARE CORPORATION,

Plaintiff,

vs.

OCTANE FITNESS, LLC, A MINNESOTA
LIMITED LIABILITY COMPANY,

Defendant.

Deposition of
Jahan Rasty, Ph.D.
May 4, 2010
9:00 A.M.

***

[71] Q. Let's assume, I have a drawing here.

[72] Let's assume that point number one is a starting point and point number two is an ending point.

If an object travels from point one along this curve to point two and back to point one, is that reciprocation?

MR. VEVERKA: Objection, vague and ambiguous.

THE WITNESS: It keeps doing that, it goes from one to two, back to one, back to two?

BY MR. CUTLER:
Q. That's correct.

A. That reciprocating motion, yes.

Q. Is that a linear reciprocating displacement?

A. It's a linear reciprocating displacement.

Q. And why is that?

A. Because the displacement, it's going along a curved path, but the displacement is along the linear path. From one to two is a linear line.

Q. Okay, and all displacements are linear, is that what you're saying?

MR. VEVERKA: Objection, misstates testimony, vague and ambiguous.

THE WITNESS: Displacements, yes; not motions.

[73] BY MR. CUTLER:
Q. But all displacements are linear.

MR. VEVERKA: Same objection.

THE WITNESS: Correct.

BY MR. CUTLER:
Q. Let me ask you this. Well, you know what? I want to have this marked as Rasty Exhibit 5. And then why don't you mark this as 6?

(Deposition Exhibits 5 and 6 marked for identification.)

BY MR. CUTLER:
Q. Okay, now, I want you to assume again, Rasty Exhibit 6 we have a starting point of 1 and ending point of 2 and I want you to assume that an object travels along a path from 1 to 2, back to 1, back to 2.

Is that a reciprocation?

MR. VEVERKA: Objection, vague and ambiguous.

THE WITNESS: So, it goes around this path that you have drawn and then goes back along the same path?

BY MR. CUTLER:
Q. Correct.

A. The way I understand reciprocation is that you're [74] traversing along the same path back and forth.

Q. So this would be reciprocation in the Rasty 6, correct?

A. Correct.

Q. Is it a linear reciprocating displacement?

MR. VEVERKA: Objection, vague and ambiguous.

THE WITNESS: It's a linear reciprocating displacement.

BY MR. CUTLER:
Q. It is?

A. I'm defining displacement as change in position.

Q. Because 1 and 2 are on a line, it makes it a linear reciprocating displacement, is that correct?

MR. VEVERKA: Objection, vague and ambiguous.

THE WITNESS: The definition of displacement is basically the difference between the coordinates, starting coordinates and ending coordinates which by definition is a line.

BY MR. CUTLER:
Q. Okay, I don't know if you answered this or not. Is Rasty 6, what's shown in that exhibit, a linear reciprocating displacement?

[75] MR. VEVERKA: Objection, vague and ambiguous.

THE WITNESS: It's a linear reciprocating displacement, yes.

Appendix H

(Deposition Exhibit 7 marked for identification.)

BY MR. CUTLER:
Q. All right, I'm handing you what the court reporter has marked as Rasty 7, starting point 1, ending point 2. I want you to assume for purposes of these next two questions that an object travels along the path shown in Rasty 7, travels back to point 1, to point 2, back and forth, back and forth. Is that a linear reciprocating displacement?

MR. VEVERKA: Objection, vague and ambiguous.

THE WITNESS: I'm assuming that all of these are pretty symmetrical to one another.

BY MR. CUTLER:
Q. No.

A. They are all different?

Q. Could be.

A. Random, but based on the same definition, it's still, this displacement is linear.

[76]Q. Okay, so this is linear reciprocating displacement?

A. Displacement, emphasizing that word.

Q. But it is?

A. Yes.

Q. This will be the last one. I promise you.

(Deposition Exhibit 8 marked for identification.)

BY MR. CUTLER:
Q. Okay, handing you what's been marked as Rasty Exhibit 8, again for purposes of these next two questions, I want you to assume that an object travels from point 1 to point 2 along the path shown and travels back along the same path, back and forth, back and forth between 1 and 2.

Is this a linear reciprocating displacement.

MR. VEVERKA: Objection, vague and ambiguous.

THE WITNESS: Yes.

***

[164] What is the difference between linear reciprocating displacement and just reciprocating displacement?

MR. VEVERKA: Object to form.

[165] THE WITNESS: Really it's redundant.

BY MR. CUTLER:
So they are one in the same?

A. Yeah, Displacements are linear.

****

Appendix H

See Supplemental Appendix at Pages SA-49 - SA-52

DRAWINGS FROM RASTY DEPOSITION
EXHIBITS 5, 6, 7 & 8

APPENDIX I — EXCERPTS FROM W. DALEBOUT DEPOSITION, DATED DECEMBER 4, 2009

[1] IN THE UNITED STATES DISTRICT COURT
DISTRICT OF MINNESOTA
FOURTH DIVISION

CASE NO. 09-CV-00319 (ADM/SRN)

ICON HEALTH & FITNESS, INC.,
A DELAWARE CORPORATION,

Plaintiff,

vs.

OCTANE FITNESS, LLC, A MINNESOTA
LIMITED LIABILITY COMPANY,

Defendant.

Deposition of:
William Terry Dalebout
Attorney's Eyes Only
December 4, 2009

***

[14] Q. No, I am not. What are the product lines? Maybe you can generalize the types of product offerings that ICON has in the elliptical line.

A. Okay, the first area where we – this is the way we categorize them, at least – rear-mech ellipticals. Those may or may not be based upon the Miller patents which

Precor has licensed and we have sublicensed from them. The majority of ellipticals in the marketplace are based on that configuration. And, again, they may or may not need to be licensed from Precor based upon their exact configuration.

Then we move to what we call front-mech ellipticals. And by that we mean, of course, the mechanism is in the front, but it also provides the ability for the user to enter directly from the rear of the machine, rather than on a rear-mech elliptical requiring that he come up to the side of the machine and step over, on the pedals. And there are multiple weighs [15] to do front-mech ellipticals.

***

[16] Q. How about for the front-mech ellipticals?

A. We have developed them. We do not currently have a unit in the marketplace that adjusts for stride.

***

[26] Q. We talked about front mech, and I didn't follow up. You said that there is no offering in the marketplace for a front-mech elliptical that allows for adjusting the length of stride, correct?

A. With a front mech?

Q. Front mech, correct.

[27] MR. VEVERKA: Objection, foundation.

A. That's currently true.

Q. Has there ever been such an offering?

A. Yes.

Q. So at some point in time in the past ICON has sold a front-mech elliptical that allows a user to adjust the length of the stride?

A. I didn't say we sold it. I said we offered it. Sorry to get picky with you.

Q. No, that's fine. Let me ask another question, then. Has ICON ever sold a front-mech elliptical that allows a user to change the length of the stride?

A. Not to my knowledge.

Q. Let's talk about the offering. Do you have any personal knowledge about to whom such an offering was made?

A. I can't give you the names of specific customers. However, we have some key customers that we have dealt with over the years, and when we are in a position to make an offering, we will bring those key customers in and review it with them and determine whether or not they are interested based upon our showing them a long line.

Q. Do you have any personal knowledge of the features or the structure of the elliptical that we are [28] discussing now, the front mech, that had length of stride adjustability?

MR. VEVERKA: Objection, compound.

A. It's the product that I think is in question here in front of all of us.

Q. I am going to hand you what has previously been marked as Defendant's Exhibit No. 3, and that's U.S. patent No. 6019710; is that correct?

A. Yes.

Q. I am going to refer to that particular document as the '710 patent referencing the last three numbers. Do you understand when I say "'710 patent" I am referring to Defendant's Exhibit 3?

A. Yes.

Q. Is it your testimony today that the elliptical that is described and claimed in the '710 patent was offered to customers at some point in the past?

A. Well, let me see if I can be more clear on that. When I talk about offering it to a customer, this is very often in a closed setting – not very often – it is always in a closed setting, where we are trying to measure the enthusiasm of people in the marketplace, of major customers in the marketplace, for a concept. It will very often determine

whether we choose to move ahead, regardless of our own feelings towards it, and [29] will always be in comparison with other offerings sitting in front of them at the same time.

Q. Do you have specific recollection of the meeting at which the concept disclosed in the '710 patent was offered or described to a customer?

A. This would have been – there is no single meeting that would qualify for answering that question. This would have been part of visits by customers to review other product, and to put a date and a time to it would be pretty difficult for me.

Q. You don't have any specific recollection of those meetings, correct?

A. I can tell you that they happened. I can't tell you precisely who was there, nor I would have a hard time coming up with dates.

Q. How do you know for sure that it happened?

A. I was there.

Q. But you don't know who you were talking to?

A. We have a great many customers. We have hundreds of meetings every year. So it is going to be pretty tough for me to tell you who was there.

Q. But you do remember presenting this?

A. Sure, you bet.

Q. Do you recall the response you got from your customer upon being presented with this idea?

[30] A. Well, buyers tend to be – to keep their cards close to their vest. In fact, most buyers have a hard time expressing enthusiasm, because they think you will then charge them more for the product. That's just my experience and history. However, my interpretation of their response was, yeah, we are interested. Let's keep talking. Let's keep talking. Let's look at what else you have got. Maybe if you want to reduce this to a specific price point and so forth we can tell you how much more interested we may be.

Q. So I assume, did you keep talking with the customers?

A. Sure.

Q. Did you get to the price point?

A. I typically do not deal with price points at all. In fact, I tend to exit the room when we get there.

Q. How does ICON deal with the process of offering price points? Is it a written document?

A. When we finally get there, yes.

Q. Do you know where such written documents would be?

A. They would be within the sales department. My guess would be that this product did not get to a written offer for sale.

[31] Q. And why is that?

A. It just never made it to the top ten. It just didn't get to the buyers that's the one I want, combination of price, features, availability.

***

[34] Q. It was kind of a choppy one. Did ICON ever come to a conclusion of what price it would charge for the elliptical having the features of the '710 patent if [35] it were to bring it to the market?

MR. VEVERKA: Objection, compound.

[

REDACTED

]

Appendix I

[

REDACTED

]

***

[82] Q. Does ICON currently have plans to market a machine that has the features that are described and claimed in the '710 patent?

A. No current plans.

Q. But yet ICON doesn't sell a front-mech machine with adjustable stride length; is that correct?

A. That's correct.

***

[84] Q. Are you aware of any instance in which a customer has asked for a front-mech elliptical from ICON that has stride adjustability?

A. I'm not aware specifically.

****

APPENDIX J — EXCERPTS FROM T. PORTH DEPOSITION, DATED JANUARY 18, 2010

[1] UNITED STATES DISTRICT COURT
DISTRICT OF MINNESOTA
FOURTH DIVISION

CASE NO. 09-CV-00319 (ADM/SRN)

ICON HEALTH & FITNESS, INC.,
A DELAWARE CORPORATION,

Plaintiff,

vs.

OCTANE FITNESS, LLC, A MINNESOTA
LIMITED LIABILITY COMPANY,

Defendant.

Videotape Deposition of
Timothy J. Porth
January 18, 2010
9:03 A.M.

***

[10] Q. What was your position when you went back to LifeFitness?

A. When I started I was senior product manager for strength equipment, then transitioned into senior business manager for cardiovascular and then ultimately I was, I'm

trying to remember my title. I was senior director of all cardiovascular, so really the product management role. So the titles changed many times through all that, but in essence I was senior, called it senior business management director for cardiovascular.

Q. Okay, and after LifeFitness—

A. Then I started Octane with another gentleman, Dennis Lee.

***

[34] Q. Okay, with respect to topic 27, are you familiar with someone named Joseph Maresh?

A. I am.

Q. What, does Mr. Maresh have a professional relationship with Octane?

MR. SORIANO: Object to the form of the question.

THE WITNESS: Yes, he does.

BY MR. VEVERKA:
Q. And what is the nature of that relationship?

A. He's an inventor of fitness equipment and we license concepts from him.

Q. Are you familiar with Kenneth Stearns?

A. I am.

Q. Does Octane have a professional relationship with Mr. Stearns?

MR. SORIANO: Object to the form.

[35] THE WITNESS: We do and his name is misstated on here. I believe there is an S on the end of his name.

BY MR. VEVERKA:
Q. Stearns?

A. I believe so.

Q. Okay.

A. Just so we're talking about the same person.

Q. Ken Stearns?

A. Yes.

Q. Okay, what is the nature of the Octane's relationship with Ken Stearns?

A. Same as with Joe, he's an inventor of fitness equipment and we have licensed products from him in the past.

Q. Do you presently have a license agreement between Octane and Joe Maresh?

A. Yeah, I mean, depending on how that's stated, we have with one of his companies, so I assume that's with him, but-

Q. If it is a company that is owned or operated by Mr. Maresh, I would want that to be included.

A. Okay, then yes.

Q. And, does Octane have a license, current license agreement with Mr. Stearns?

[36] A. Yes, with Mr. Stearns or one of his companies.

Q. Do you, does Octane have any license agreements with Mr. Maresh that is, does not also include a license with Mr. Stearns?

A. No.

Q. So all of the license agreements you have with Mr. Maresh are in combination with license agreements you have with Mr. Stearns, correct?

A. Correct.

Q. And vice versa?

A. Correct.

Q. Stearns and Maresh is sort of a package deal sort of?

A. Yes, they're business partners.

Appendix J

***

[37] Q. Are any of Octane's present products, would you consider them a design either of Mr. Stearns or Maresh?

MR. SORIANO: I'll object to the form of the question, foundation.

THE WITNESS: The, well, it depends on what you mean by design. The linkage arrangement, our products are founded or based on a patent that they have invented.

***

[53] Q. And, taking my questions, not being limited by this license agreement, describe for me what the consumer market is as far as Octane understands it.

MR. SORIANO: Object to the form.

THE WITNESS: Well, consumer market can be broken up. There is a direct channel which is selling on Internet, infomercials, that kind of thing where you're selling directly to the end customer.

There is mass market, which would include like Sears and Wal-Mart and Target, sporting goods which would include Sports Authority, Dick's Sporting Goods. I think there is still some Ashman's.

There is two markets, mass and sporting goods which is where, and some direct as well, ICON plays.

Appendix J

We sell through specialty fitness, what is commonly referred to as specialty fitness which is a two to 4,000 square foot store that sells higher-priced premium fitness equipment and solely fitness equipment to peoples homes and that's where we, that's our focus is that market which ICON has virtually no presence.

****

APPENDIX K — EXCERPTS FROM P. MCGINNIS DEPOSITION, DATED JANUARY 21, 2010

[1] IN THE UNITED STATES DISTRICT COURT
FOR THE DISTRICT OF MINNESOTA
FOURTH DIVISION

NO. 0:09-CV-00319 (ADM/SRN)

ICON HEALTH & FITNESS, INC.,
A DELAWARE CORPORATION,

Plaintiff,

vs.

OCTANE FITNESS, LLC, A MINNESOTA
LIMITED LIABILITY COMPANY,

Defendant.

Deposition of:
Pat McGinnis
January 21, 2010
2:05 P.M.

"CONFIDENTIAL -- ATTORNEY EYES ONLY"

***

[69] Q. Why were you going after Octane, why was ICON going after Octane?

Appendix K

A. When I speak I'm speaking for FreeMotion so, but FreeMotion was going after Octane because they are the leader in the elliptical category in the channel, we were competing, these were my two specialty fitness reps and in our evaluation Octane was the leader of the elliptical category at that time in this channel that [70] these guys were selling in.

****

APPENDIX L — EXCERPTS FROM L. GUNDERSON DEPOSITION, DATED APRIL 28, 2010

[1] UNITED STATES DISTRICT COURT
FOR THE DISTRICT OF MINNESOTA

CASE NO. 09-CV-00319 (ADM/SRN)

ICON HEALTH & FITNESS, INC.,
A DELAWARE CORPORATION,

Plaintiff,

vs.

OCTANE FITNESS, LLC, A MINNESOTA
LIMITED LIABILITY COMPANY,

Defendant.

Deposition of
LANCE E. GUNDERSON
April 28, 2010
9:00 A.M.

CONFIDENTIAL TRANSCRIPT
ATTORNEY'S EYES ONLY

***

[54] Q. Has ICON ever made a commercial embodiment of what the invention in the '710 patent is?

A. I don't believe that they have.

****

APPENDIX M — PTO NOTICE OF ALLOWANCE FOR U.S. PATENT NO. 6,019,710

Notice of Allowability

Application No.
09/003,322

Applicant(s)
Dalebout et al

Examiner
S. Crow

Group Art Unit
3764

All claims being allowable, PROSECUTION ON THE MERITS IS (OR REMAINS) CLOSED in this application. If not included herewith (or previously mailed), a Notice of Allowance and Issue Fee Due or other appropriate communication will be mailed in due course.

☒ This communication is responsive to *the telephone conversation on 9-24-99*

☒ The allowed claim(s) is/are *1-34*

☐ The drawings filed on _____ are acceptable.

☐ Acknowledgement is made of a claim for foreign priority under 35 U.S.C. § 119(a)-(d).

Appendix M

☐ All ☐ Some* ☐ None of the CERTIFIED copies of the priority documents have been

☐ received.

☐ received in Application No. (Series Code/ Serial Number)

☐ received in this national stage application from the International Bureau (PCT Rule 17.2(a)).

*Certified copies not received:_____.

☐ Acknowledgement is made of a claim for domestic priority under 35 U.S. C. § 119(e).

A SHORTENED STATUTORY PERIOD FOR RESPONSE to comply with the requirements noted below is set to EXPIRE THREE MONTHS FROM THE "DATE MAILED" of this Office action. Failure to timely comply will result in ABANDONMENT of this application. Extensions of time may be obtained under the provisions of 37 CFR 1.136(a).

☐ Note the attached EXAMINER'S AMENDMENT or NOTICE OF INFORMAL APPLICATION, PTO-152, which discloses that the oath or declaration is deficient. A SUBSTITUTE OATH OR DECLARATION IS REQUIRED.

☐ Applicant MUST submit NEW FORMAL DRAWINGS

☐ because the originally filed drawings were declared by applicant to be informal.

☐ including changes required by the Notice of Draftsperson's Patent Drawing Review, PTO-948, attached hereto or to Paper No. _____

☐ including changes required by the proposed drawing correction filed on _____, which has been approved by the examiner.

☐ including changes required by the attached Examiner's Amendment/Comment.

Identifying indicia such as the application number (see 37 CFR 1.84(c)) should be written on the reverse side of the drawings. The drawings should be filed as a separate paper with a transmittal letter addressed to the Official Draftsperson.

☐ Note the attached Examiner's comment regarding REQUIREMENT FOR THE DEPOSIT OF BIOLOGICAL MATERIAL.

Any response to this letter should include, in the upper right hand corner, the APPLICATION NUMBER (SERIES CODE/SERIAL NUMBER). If applicant has received a Notice of Allowance and Issue Fee Due, the ISSUE BATCH NUMBER and DATE of the NOTICE OF ALLOWANCE should also be included.

Appendix M

Attachment(s)

☒ Notice of References Cited, PTO-892

☒ Information Disclosure Statement(s), PTO-1449, Paper No(s). *5, 7*

☒ Notice of Draftsperson's Patent Drawing Review, PTO-948

☐ Notice of Informal Patent Application, PTO-152

☐ Interview Summary, PTO-413

☒ Examiner's Amendment/Comment

☐ Examiner's Comment Regarding Requirement for Deposit of Biological Material

☒ Examiner's Statement of Reasons for Allowance

Appendix M

EXAMINER'S AMENDMENT

1. An examiner's amendment to the record appears below. Should the changes and/or additions be unacceptable to applicant, an amendment may be filed as provided by 37 CFR 1.312. To ensure consideration of such an amendment, it MUST be submitted no later than the payment of the issue fee.

Authorization for this examiner's amendment was given in a telephone interview with D. Tangren on 9-23-99.

2. The application has been amended as follows:

In claim 2 line 3, "axil" has been changed to --axle--. In line 8, "axil" has been changed to --axle--.

In claim 13 line 3, "axil" has been changed to --axle--. In line 5, "axil" has been changed to --axle--.

In claim 15 line 2, "axil" has been changed to --axle--.

In claim 23 line 2, "an" has been changed to --a--. In line 4, "a first crank arm" has been changed to --first and second crank arms--. In line 6, "a first foot rail" has been changed to --first and second foot rails--. In line 8, "arm" has been changed to --arms--; "the first foot rail" has been changed to --hingedly attached to said foot rails--. In line 9, "first" has been deleted and "rail" Has been changed to --rails--. In line 10, "arm is" has been changed to --arms are--; and --; wherein said stroke means is slidably mounted to the frame--.

Appendix M

In claim 30 line 11, "adjustable" has been changed to --adjustably--.

In claim 32 line 3, "axil" has been changed to --axle--. In line 6, "axil" has been changed to --axle--.

3. The following is an examiner's statement of reasons for allowance:

The prior art fails to show or teach applicant's claimed exercise apparatus comprising a frame; a pair of foot rails having foot supports; a pair of stroke rails each having one end hingedly connected to a respective foot rail and having the opposite end connected to the frame for linear reciprocating movement and for producing an elliptical path.

Any comments considered necessary by applicant must be submitted no later than the payment of the issue fee and, to avoid processing delays, should preferably accompany the issue fee. Such submissions should be clearly labeled "Comments on Statement of Reasons for Allowance."

4. Any inquiry concerning this communication or earlier communications from the examiner should be directed to Steven Crow whose telephone number is (703) 308-3398.

/s/
STEPHEN R. CROW
PRIMARY EXAMINER
ART UNIT 332

APPENDIX N — EXPERT REPORT OF JAHAN RASTY, PH.D., DATED MARCH 1, 2010

IN THE UNITED STATES DISTRICT COURT
FOR THE DISTRICT OF MINNESOTA
FOURTH DIVISION

Case No.: 0:09-cv-00319 (ADM/SRN)

ICON HEALTH & FITNESS, INC.,
a Delaware corporation,

Plaintiff,

vs.

OCTANE FITNESS, LLC,
a Minnesota limited liability company,

Defendant.

EXPERT REPORT OF JAHAN RASTY, PH.D

Attached hereto is the
Expert Report of Jahan Rasty, Ph.D.

DATED this 1st day of March, 2010.

Lawrence M. Shapiro, P.A.
Reg. No. 130886
Jeanette M. Bazis, Reg. No. 255646
GREENE ESPEL, PLLP
200 South 6th Street, Suite 1200
Minneapolis, MN 55402-1415

Appendix N

By: /s/
David R. Wright, UT Bar No. 5164
C.J. Veverka, UT Bar No. 7110
H. Craig Hall, UT Bar No. 8691
WORKMAN NYDEGGER
1000 Eagle Gate Tower
60 East South Temple
Salt Lake City, UT 84111

Attorneys for Plaintiff
ICON HEALTH & FITNESS, INC.

Expert Report: Comparison of Octane Fitness Q45 and Q47 Elliptical Exercise Devices to Asserted Patent Claims of U.S. Patent Number 6,619,710

Re: *ICON Health & Fitness, Inc. v. Octane Fitness, LLC*
United States District Court for the District of Minnesota
Case No.: 0:09-cv-00319 (ADM/SRN)

A report submitted to:

Workman Nydegger
1000 Eagle Gate Tower
60 East South Temple
Salt Lake City, UT 84111

Prepared by:

/s/
Dr. J. Rasty, Ph.D., PE, MBA

Date: March 1, 2010

Appendix N

Summary of Opinions:

Primary Analysis

Two Octane Fitness (Octane) elliptical exercise devices were provided for inspection and evaluation. These devices were identified as Octane's Q45 and Q47 elliptical trainers (sometimes referred to as "accused devices"). It has been alleged by ICON Health & Fitness (ICON) that these devices literally infringe claims 1 – 5, 7, and 9 – 11 of ICON's U.S. Patent Number 6,019,710 ('710 patent). I have been asked to compare the elements of these asserted patent claims to the Q45[1] and Q47[2] devices to determine if each of these elements is present. For purposes of this analysis, I have been asked to assume that ICON's proposed claim constructions are correct. Applying these assumptions, it is my opinion that each element of the asserted claims is present in both the Q45 and Q47 devices.

Alternative Analysis

I have been apprised of Octane's proposed claim constructions for elements (d) and (e) of Claim 1, and element (iii) of Claim 2. I have been asked to assume that these constructions are correct and determine, as an alternative, if each of these elements is still present in the Q45 and Q47 devices. If they are not present, I have

---

1. Octane has indicated that the relevant portions of the Q45 are the same as the Q45e, Q45ce, Pro 450 and Pro4500.

2. Octane has indicated that the relevant portions of the Q47 are the same as the Q47, Q47e, Q47ce and Pro 4700.

been asked to determine if the differences between these elements and the corresponding components of the Q45 and Q47 devices are insubstantial. Applying Octane's proposed constructions I have concluded each of these elements is either still present or that the differences between the element, as defined by Octane, and the corresponding component of the accused products is insubstantial.

Expert Qualifications and Compensation:

My academic qualifications include bachelors, masters, and doctoral degrees in Mechanical Engineering (LSU), as well as a masters degree in business administration (Texas Tech). My areas of expertise within mechanical engineering that are pertinent to this case include Mechanical Design, Materials Science, Manufacturing, Mechanics of Materials, Failure Analysis and Forensic Engineering. I have worked on federally funded and peer-reviewed research projects dealing with design, manufacturing and failure analysis of a wide variety of materials and components. I have also been involved in consulting projects dealing with design and analysis of machinery involving mechanisms and interconnected components. I am a registered professional engineer (state of TX), and have been involved in mechanical engineering and related work for the past 29 years in various capacities including industry, national R&D laboratories, national research foundations and academia.

For the past 22+ years (since 1988), I have maintained continuous employment as a tenured full professor at

the department of Mechanical Engineering at Texas Tech University where I taught 23 different courses at the graduate and undergraduate levels in the areas of design, kinematics and kinetics of rigid bodies (motion analysis), manufacturing, materials science, mechanical metallurgy, solid mechanics, statics, dynamics, and component failure analysis. I am also the director of the *Materials Performance and Failure Analysis Laboratory* at the Mechanical Engineering Department at Texas Tech University where I have been involved as the Principal and/or Co-Principal Investigator of more than $7.4 million in research grants from various industries, government agencies, national funding agencies, and national research laboratories. The results of my research in above areas have been presented at national and international conferences, and have been published in peer-reviewed journals as indicated in my CV.

Over the past 29+ years, I have also served as the president of Real-World Forensic Engineering, which is a consulting engineering firm specializing in engineering consulting, accident investigation, root-cause failure analysis, and intellectual property-related engineering support. In this capacity, I have been involved in more than 100 engineering consulting and research projects in the areas of materials property characterization, mechanical design, testing, failure analysis, and intellectual property cases. I have been qualified and have testified in both state and federal courts, as well as in depositions on behalf of both defendants (40%) as well as plaintiffs (60%).

Appendix N

My CV and a history of my testimony during the past 4 years are attached as Appendices A and B, respectively. Having personal knowledge of the facts set forth in this report through inspection of the accused devices, review of case documents and discussions with ICON's counsel, and based on my education, training, and professional experience, I believe I am qualified to render an expert opinion regarding the subject matter of this report.

I am being compensated at the rate of $275 per hour for time spent in connection with my analysis and other work, $375 per hour for deposition or trial testimony, and $2,850 for a full day out of town travel/work requiring an overnight stay.

Data and Other Information Considered:

The following materials were provided to me by plaintiff's counsel and have been relied upon, at least partially, in arriving at the conclusions in this report:

1. U.S. Patent Number 6,019,710
2. The prosecution history of U.S. Patent Number 6,019,710
3. Octane's Q45 Elliptical Trainer
4. Octane's Q47 Elliptical Trainer
5. Plaintiff's Claim Chart
6. Plaintiff's Supplemental Claim Chart

Appendix N

7. Defendant Octane Fitness' Claim Chart

8. The parties' proposed claim constructions

9. Deposition of William Dalebout

10. Deposition of Joseph Halfen

11. Deposition of Nathan Lugar

12. Deposition of Timothy J. Porth

13. ICON-OCT5637-5663

14. Octane engineering drawings, product specifications and service manuals for the Q45 and Q47 family of products, including but not limited to OCTANE000039, OCTANE000088, OCTANE000090 – OCTANE 000091, OCTANE000255, OCTANE000296 – OCTANE000297, OCTANE000299, OCTANE000312, OCTANE000315 – OCTANE000316, OCTANE000321, OCTANE000339, OCTANE000347, OCTANE021150, OCTANE021162, OCTANE021175, OCTANE021297, OCTANE021338, OCTANE021340 – OCTANE021342, OCTANE021344, OCTANE103670 – OCTANE103752, OCTANE107947 – OCTANE108022.

I may rely upon, or utilize any portions of the above material as exhibits in any future testimony.

Appendix N

The Parties Respective Proposed Claim Constructions

I understand that both ICON and Octane have proposed different definitions for some terms of the asserted claims. These constructions have been provided to me by plaintiffs' counsel and are attached to my report as Appendix C.

Infringement Standards

It has been explained to me that "literal infringement" exists when every requirement set forth in a claim is met by the accused products. With respect to claim elements constituting "means plus function" elements, I understand that literal infringement is found if the accused product (1) performs the stated function and (2) includes the corresponding structure disclosed in the patent specification for performing that claimed function. If the identical corresponding structure is not present in the accused product, literal infringement still exists if the structure that accomplishes the claimed function is equivalent to the corresponding structure from the specification.

I has also been explained to me that even if there is not literal infringement, there can still be infringement under the "doctrine of equivalents" if the differences between the claim requirement and the corresponding component (or function) of the accused device are "insubstantial."

Appendix N

Statement of Opinions

Background

I have conducted an extensive inspection and analysis of the mechanics and functioning of Octane's Q45 and Q47 elliptical trainers. Pictures of these devices are shown below:

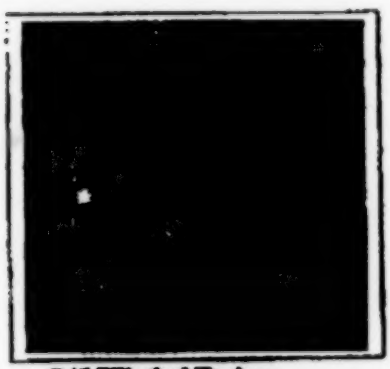

Q45 Elliptical Trainer

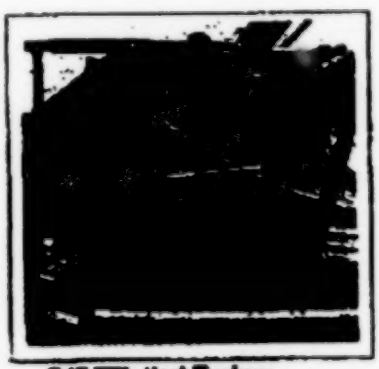

Q47 Elliptical Trainer

I inspected a Q45 and Q47 device at a warehouse in Minneapolis, Minnesota. I also inspected a Q47 device at the offices of Workman Nydegger in Salt Lake City, Utah. During my inspections I operated the devices using every available stride length, examined the inner mechanical working of the devices, both standing still and during operation, and at every available stride length and at various speeds of operation. I also took measurements of different dimensions of the devices during my inspections. Based on data gathered during my inspections and from case documents related to the Q45 and Q47, I and trained and experience technicians and engineers under my direct supervision, generated kinematic computer models

involving relevant mechanisms of the accused devices in order to evaluate the movement of those components during use.

Using the figures of the '710 patent, I also generated computer models to study and analyze the relevant features of the embodiment disclosed by those figures. Based on my inspection and analysis of the accused devices, documents and materials identified above, and the computer models of the accused devices and '710 patent embodiment, I have formed the following opinions:

Analysis Applying ICON's Claim Construction

I understand that claims 1 – 5, 7, and 9 – 11 of the '710 patent are asserted against Octane. Below are tables with the asserted claims and ICON's proposed constructions reproduced in the left columns. My opinion concerning the presence of corresponding elements in the Q45 and Q47 devices is provided in the right columns.

Appendix N

'710 Patent – Claim 1	**Matching Features in Q45 and Q47**
1. An exercise apparatus comprising:	**Q45 and Q47** – Both products are exercise devices.
(a) a frame configured for resting on a ground surface; **No construction has been offered by ICON for this element.**	**Q45** – Lower Frame, Tracks and Mast **Q47** – portions of Main Frame, Tracks and Console Mast These frames rest on the ground. **I understand that Octane has conceded that these requirements are met by the Q47 device. In the event Octane does not make the same concession with respect to the Q45 device, I may testify that the structures of the two devices are sufficiently similar or identical, that Octane's concession with respect to the Q47 should be applied to the Q45.**
(b) a pair of spaced apart foot rails each having a first end and an opposing second end, each foot rail being configured to receive a corresponding foot of a user;	**Q45 and Q47** – Pedal Lever Assemblies These structures have two ends and are designed to receive a user's foot.

Appendix N

No construction has been offered by ICON for this element.	**I understand that Octane has conceded that these requirements are met by the Q47 device. In the event Octane does not make the same concession with respect to the Q45 device, I may testify that the structures of the two devices are sufficiently similar, or identical, that Octane's concession with respect to the Q47 should be applied to the Q45.**
(c) a pair of stroke rails each having a first end and an opposing second end, the second end of each stroke rail being hingedly attached to the first end of a corresponding foot rail; **No construction has been offered by ICON for this element.**	**Q45** – 3P Actuator Links. These structures have two opposing ends. One end (second end) of this structure is attached to the forward end of a foot rail by a hinge connection. The opposing end is the first end. **Q47** – 3P Link Assemblies. These structures have two opposing ends. One end (second end) of this structure is attached to the forward end of a foot rail by a hinge connection. The opposing end is the first end. Octane drawings.

Appendix N

	I understand that Octane has conceded that these requirements are met by the Q47 device. In the event Octane does not make the same concession with respect to the Q45 device, I may testify that the structures of the two devices are sufficiently similar or identical, that Octane's concession with respect to the Q47 should be applied to the Q45.
(d) means for connecting each stroke rail to the frame such that linear reciprocating displacement of the first end of each stroke rail results in displacement of the second end of each stroke rail in a substantially elliptical path; and **ICON's proposed constructions:**	**Function:** Through observation and analysis of the actual devices in operation and analysis of computer models, I have confirmed that the Q47 and Q45 perform the function of this element as construed by ICON. Specifically, I have confirmed linear reciprocating displacement (as defined by ICON) at the first end of the stroke rails results in a substantially elliptical path at the second end of the stroke rails.

Appendix N

This is a means plus function element to be construed pursuant to 35 U.S.C. §112, ¶6. **Function:** connecting each stroke rail to the frame in a manner that results in displacement of the second end of each stroke rail in a substantially elliptical path if the first end undergoes linear reciprocating displacement. **Corresponding Structure:** An axle mounted to a pair of crank arms, a pin projecting from each crank arm, and a collar encircling each pin. The axle is mounted to the frame and each collar is attached to a stroke rail. ***	**Structure:** The structure disclosed in the patent for performing this function converts linear reciprocating displacement at the first end of the stroke rail to substantially elliptical motion at the second end of the stroke rail. It does so by providing the circular motion from which the elliptical motion is derived. I will refer to this connection by shorthand as the "Crank Shaft Connection." I have confirmed that the Q45 and Q47 have the structure that is the same as or equivalent to the structure performing this function as defined by ICON's claim construction (**); **Q45** – The Q45 has the Crank Shaft Connection. Each of the 3P Actuator Links (stroke rail) is attached to the end of a Crank Arm (crank arm) by a Shoulder Screw (pin). The Shoulder Screw projects

Linear reciprocating displacement means "a change in position from a first point to a second point followed by a change in position from the second point back to the first point, where the change in position from one point to the other results in a net change in position along a line. Linear reciprocating displacement does not require movement along a linear path." (e) means for selectively varying the size of the substantially elliptical path that the second end of each stroke rail travels. **ICON's proposed construction:** This is a means plus function element to be construed pursuant to U.S.C. §112, ¶6.	from the Crank Arm and is attached to the 3P Actuator Link by extending through and being encircled by an aperture and Flanged Bushing (collar) in the 3P Actuator Link. The Crank Arms are connected to the frame by rigid attachment at opposing ends of a Crank Shaft (axle) which extends through the frame. **Q47** – The Q47 has the Crank Shaft Connection. Each 3P Link Assembly (stroke rail) includes an Actuator Swing Arm which is attached to a Crank Arm (crank arm) at the Crank Arm Shaft (pin). The Crank Arm Shaft projects from the Crank Arm and is attached to a 3P Link Assembly by extending through and being encircled by the Swing Arm Hub and Flanged Bearing (collar) of the Actuator Swing Arm. Each of the Crank Arms is attached to the frame by rigid

Appendix N

Function: for selectively varying the size of the substantially elliptical path that the second end of each stroke rail travels **Corresponding Structure:** (1) An arm with holes along a portion of its length that can aligned with a pin and a hole in a stroke rail; or (2) an electric motor driving a gear that engages teeth on a bar to move an adjustment arm.	attachment to the Crank Shaft (axle) which in turn extends through the frame. **Function:** Through observation and analysis of the actual devices in operation and analysis of computer models, I have confirmed that the Q47 and Q45 perform the function of this element as construed by ICON. Specifically, the size of the substantially elliptical path that the second end of each stroke rail travels can be selectively varied. **Structure:** **Q45 and Q47** – The accused products have structure that is equivalent to the structure performing this function as defined by ICON's claim construction. Specifically, the Q45 and Q47 have equivalent structure to the second embodiment disclosed for performing this function: "an electric motor driving a gear that engages teeth on a bar to move an adjustment arm."

Appendix N

	The Q45 and Q47 both have electric motors that rotate a screw that results in selective variation of the size of the substantially elliptical path. Both the mechanism described in ICON's claim construction (rack and pinion) and the mechanism used in the Q45 and Q47 devices (power screw or lead screw) perform the claimed function through substantially the same way to achieve substantially the same result. Additionally, rack and pinions and power screws are known to be interchangeable mechanical systems for accomplishing the same result. **Function:** Both mechanisms vary the size of the substantially elliptical path that the second end of each stroke rail travels. **Way:** Both mechanisms transform the rotary motion of an electric motor into transverse motion. More

	specifically, the rotary motion of the electric motor causes the gear of the rack and pinion to traverse the teeth of the associated bar. In a very similar way, the rotary motion of the electric motor causes the screw of the power screw to rotate. This rotation causes the threads of the nut to traverse along the threads of the associated screw. **Result:** These mechanisms increase/decrease the effective distance between two pivot points which in turn varies the size of the substantially elliptical path. **Known Interchangeability of structure:** In mechanics, powers screws and rack and pinion devices are known to the interchangeable systems in many applications. Deposition of J. Halfen, pp. 29 – 31, Deposition of N. Lugar, 47 – 51.

Appendix N

	I understand that Octane has conceded that the function of this element is accomplished by the Q47 device. In the event Octane does not make the same concession with respect to the Q45 device, I may testify that the functioning of the two devices are sufficiently similar, or identical, that Octane's concession with respect to the Q47 should be applied to the Q45.

For illustrative purposes, I have attached photographs of a Q45 and Q47 with many of these elements labeled. Appendix D.

'710 Patent – Claim 2	Matching Features in Q45 and Q47
2. An exercise apparatus as recited in claim 1, wherein the means for connecting comprises: (i) an axle having opposing ends, the axle being rotatably mounted to the frame;	**Q45 and the Q47** – Crank Shaft, Crank Arms The Crank Shafts (axle) rotatably mount to the frame by extending through the frame hubs and associated bearings. The connection between Crank

Appendix N

(ii) a crank arm rigidly mounted on each opposing end of the axle; and **No constructions have been offered by ICON for these elements.**	Arms and opposing ends of the Crank Shaft is rigid. **I understand that Octane has conceded that these requirements are met by the Q47 device. In the event Octane does not make the same concession with respect to the Q45 device, I may testify that the structures of the two devices are sufficiently similar, or identical, that Octane's concession with respect to the Q47 should be applied to the Q45.**
(iii) means for coupling each crank arm to a corresponding stroke rail so as to enable free rotation of the axle. **ICON's proposed construction:** This is a means plus function element to be construed pursuant to 35 U.S.C. §112,¶6.	**Function:** Through observation and analysis of the actual devices and associated drawings, I have confirmed that the Q45 and Q47 perform the function of this element as construed by ICON. Specifically, each crank arm is coupled to a corresponding stroke rail so as to enable free rotation of the axle.

Appendix N

Function: coupling each crank arm to a corresponding stroke rail so as to enable free rotation of the axle. **Corresponding Structure:** A pair of collars, each encircling a pin. Each pin projects from a crank arm and each collar is attached to a stroke rail.	**Structure:** I have confirmed that the Q45 and Q47 have structure that is the same as the structure for performing this function as defined by ICON's claim construction (**). Specifically, the Q45 and Q47 include "a pair of collars, each encircling a pin. Each pin projects from a crank arm and each collar is attached to a stroke rail." **Q45** – The Shoulder Screws (pins) project from the Crank Arms (crane arms) and extend through and are encircled by an aperture and Flange Bushing (collar) in the 3P Actuator Link (stroke rail). The Crank Arms are rigidly connected to the opposing ends of a Crank Shaft (axle), which remains free to rotate. **Q47** – The Crank Arm Shafts (pins) project from the Crank Arms (crank arms) and extend through and are

	encircled by the Swing Arm Hub and Flanged Bearing (collar) of the 3P Link Assembly (stroke rail). The Crank Arms are rigidly connected to the opposing ends of the Crank Shaft (axle) which remains free to rotate. **I understand that Octane has conceded that the function of this element is accomplished by the Q47 device. In the event Octane does not make the same concession with respect to the Q45 device, I may testify that the functioning of the two devices are sufficiently similar, or identical, that Octane's concession with respect to the Q47 should be applied to the Q45.**

Appendix N

'710 Patent – Claim 3	**Matching Features in Q45 and Q47**
3. An exercise apparatus as recited in claim 2 wherein the means for coupling comprises, (i) a pin projecting from each crank arm; and (ii) a tubular sleeve rotatably disposed over each pin, each tubular sleeve being rigidly secured to a corresponding stroke rail. **No constructions have been offered by ICON for these elements.**	**Q45** – The Shoulder Screws (pins) project from the Crank Arms (crank arms) and extend through an aperture and Flanged Bushing (tubular sleeve) in the 3P Actuator Link (stroke rail). The aperture and Flanged Bushing are rotatably disposed over each Shoulder Screw and are held rigid with respect to the 3P Actuator Link. **Q47** – The Crank Arm Shafts (pins) project from the Crank Arms (crank arms) and extend through the Swing Arm Hub and Flanged Bearing (tubular sleeve) of the 3P Link Assembly (stroke rail). The Swing Arm Hub and Flanged Bearing are rotatably disposed over the Crank Arm Shafts. The Swing Arm, including the Swing Arm Hub with Flanged Bearing, has an

	adjustable, rigid connection to the rest of the 3P Link Assembly. **I understand that Octane has conceded that the requirements of 3(i) are met by the Q47 device. In the event Octane does not make the same concession with respect to the Q45 device, I may testify that the structures of the two devices are sufficiently similar, or identical, that Octane's concession with respect to the Q47 should be applied to the Q45.**

'710 Patent – Claims 4 and 5	**Matching Features in Q45 and Q47**
4. An exercise apparatus as recited in claim 2, further comprising means for conserving momentum generated by rotation of the axle.	**Function:** Through observation and analysis of the actual devices and associated drawings, I have confirmed that the Q45 and Q47 perform the function of this element: "conserving momentum generated by rotation of the axle."

Appendix N

5. An exercise apparatus as recited in claim 4, wherein the means for conserving momentum comprises: (a) a flywheel mounted to the [axle]; (b) a weighted wheel rotatably mounted to the frame; and (c) a belt extending from the flywheel to the weighted wheel. **No constructions have been offered by ICON for these elements.**	**Structure:** **Q45 and Q47** – These devices include Flywheels/ Pulleys attached to the Crank Shafts (axles). Belts extend from the Flywheels/ Pulleys to the drive wheel of a Magnetic Brake Flywheels (weighted wheel) which is, in turn, rotatably mounted to the frame. Rotation of the Flywheels/ Pulleys rotates the Magnetic Brake Flywheels via a drive belt. This creates rotational force at the Magnetic Brake Flywheel that is transferred back to the Flywheels/ Pulleys to maintain rotation of the attached Crank Shafts. **I understand that Octane has conceded that these requirements are met by the Q47 device. In the event Octane does not make the same concession with respect to the Q45 device,**

Appendix N

	I may testify that the structures of the two devices are sufficiently similar or identical, that Octane's concession with respect to the Q47 should be applied to the Q45.

'710 Patent – Claim 7	Matching Features in Q45 and Q47
7. An exercise apparatus as recited in claim 1, wherein the frame comprises a pair of spaced apart tracks and a support stand upstanding therebetween. **No construction has been offered by ICON for this element.**	**Q45** – portions of the frame including, at least, Lower Frame, Mast, Tracks **Q47** – portions of fame including, at least, Base Frame Center, Crank Support, Frame Top, Console Plate Mount, Console Mast, Tracks/Rails Upstanding portions of these frames are between the Tracks/Rails. **I understand that Octane has conceded that these requirements are met by the Q47 device. In the event Octane does not make the same concession with**

Appendix N

	respect to the Q45 device, I may testify that the structures of the two devices are sufficiently similar, or identical, that Octane's concession with respect to the Q47 should be applied to the Q45.

'710 Patent – Claims 9 and 10	**Matching Features in Q45 and Q47**
9. An exercise apparatus as recited in claim 1, wherein each stroke rail is curved. 10. An exercise apparatus as recited in claim 1, wherein each foot rail is curved. **No constructions have been offered by ICON for these elements.**	**Q45** – 3P Actuator Links, Pedal **Q47** – 3P Link Assemblies, Pedal Lever These structures are curved. **I understand that Octane has conceded that these requirements are met by the Q47 device. In the event Octane does not make the same concession with respect to the Q45 device, I may testify that the structures of the two devices are sufficiently similar, or identical, that Octane's concession with respect to the Q47 should be applied to the Q45.**

Appendix N

'710 Patent – Claim 11	Matching Features in Q45 and Q47
11. An exercise apparatus as recited in claim 1, further comprising a wheel mounted on each foot rail and disposed on the frame. **No construction has been offered by ICON for this element.**	**Q45 and Q47** – Pedal Lever Assemblies These assemblies have wheels that ride on the tracks/rails of the frames. **I understand that Octane has conceded that these requirements are met by the Q47 device. In the event Octane does not make the same concession with respect to the Q45 device, I may testify that the structures of the two devices are sufficiently similar, or identical, that Octane's concession with respect to the Q47 should be applied to the Q45.**

Analysis Applying Octane's Proposed Claim Construction

I have been apprised of Octane's proposed claim constructions for elements (d) and (e) of Claim 1 and element (iii) of Claim 2. I have been asked to assume that the Court accepts Octane's constructions for Claim Elements 1(d) and (e) and 2(iii) and determine if each of these elements are present in the Q45 and Q47 devices. If they are not present, I have been asked to determine if the differences between these elements and the corresponding

elements of the Q45 and Q47 devices are insubstantial. My application of these constructions is provided below.

'710 Patent – Claim 1, Element (d) (Octane Construction)	**Matching Features in Q45 and Q47**
(d) means for connecting each stroke rail to the frame such that linear reciprocating displacement of the first end of each stroke rail results in displacement of the second end of each stroke rail in a substantially elliptical path; and **Octane's proposed construction:** This is a means plus function element to be construed pursuant to 35 U.S.C. §112, ¶6.	**Function:** Through observation and analysis of the actual devices in operation and analysis of computer models, I have confirmed that the Q45 and Q47 perform an equivalent function to this claimed function, as construed by Octane. The Octane devices perform every element of this function except that the first end of the stroke rails of the accused devices reciprocate along a slightly arcuate path rather than along a straight path. It is my opinion, however, that this is an insubstantial difference. More specifically, almost every element of this function is accomplished by the connections in the accused devices, including the ultimate

Appendix N

Function:[3] restricting the first end of each stroke rail to reciprocating motion along a straight path and connecting each stroke rail to the frame such that the motion of the first end of each stroke rail results in the second end of each stroke rail moving in a substantially elliptical manner. **Corresponding Structure:** The 11 separate elements of Octane's corresponding structure are reproduced in the table at Appendix C. *** **Linear reciprocating displacement** means "movement back and forth along a straight path."	result – a substantially elliptical path. The first end of the stroke rails of the Q45 and Q47 devices (1) connect to the frame such that (2) reciprocating movement of the first end (3) results in the second end of each stroke rail moving in a substantially elliptical manner. The only difference between this function, as defined by Octane, and the functioning of the Q45 and Q47 devices is that the first ends of the accused stroke rails reciprocate along a slightly arcuate path rather than reciprocate along a perfectly straight path. My analysis has

3. I have been asked to assume Octane is proposing this construction. I have been directed to the following as Octane statements indicating it proposes this constructions. "Regarding claim 1, element (d) . . . The function simply requires that the first end of the stroke rail move linearly and that such linear displacement result in the second end of the stroke rail moving in a substantially elliptical manner." Defendant Octane Fitness' Proposed Claim Constructions, p. 7, underscore added. [DKT 87]. "[T]he Q47 Machine does not move in a linear, reciprocating motion. Instead, that end of the stroke rail travels on an arcuate path." Defendant Octane Fitness' Claim Chart, p. 2, underscore added.

Appendix N

	revealed that substituting straight-path reciprocation with reciprocation along a slight arc has no meaningful effect on the elliptical path traveled by the second end of the stroke rail (examples attached as Appendix E). Both provide lateral constraint of the motion of the first end of the stroke rail and convert circular motion derived from the axle to elliptical motion at the second end. Therefore, Octane satisfies the function of this claim element under the Doctrine of Equivalents. **Structure:** I have confirmed that the Q45 and Q47 have structure that is equivalent to the structure identified by Octane as performing this function: **Q45 and Q47** – The entirety of the corresponding structure identified by

Appendix N

	Octane, when viewed as a whole, is equivalent to the entirety of the analogous structure in the Q45 and Q47 devices. As corresponding structure, Octane identifies what has been described above as the Crank Shaft Connection and also adds structure disclosed in the '710 patent for guiding reciprocation of the first end of the stroke rail in a manner that restricts lateral movement ("Lateral Restraining Structure"). An equivalent of this combination of the Crank Arm Connection with Lateral Restraining Structure is present in the accused devices. The specific structures employed by Q45 and Q47 devices as Lateral Restraining Structure are not identical to the specific structures identified by Octane as corresponding structure. Taken as a whole, however, the structures

	present in the accused devices are equivalent to the corresponding structures identified by Octane: **Function:** The structures in the Q45 and Q47 devices perform substantially the same function as the claimed function, as discussed at the beginning of this column. **Way:** Both sets of structures connect a part of the stroke rail to the circular motion of the axle (via the Crank Shaft Connection) and limit lateral movement of the first end of the stroke rail (via the Lateral Restraining Structure). **Result:** Both sets of structures result in an elliptical path at the second end of the stroke rail. Even when analyzed at a more specific level, it is apparent that the Q45 and Q47 have structures that are equivalent to the corresponding structures

	identified by Octane. Again, these corresponding structures can be divided into two categories: the connection of the stroke rail to the frame at the axle (Octane's structure 5 – 11) ("the Crank Shaft Connection") and structure that guides reciprocation of the first end of the stroke rail (Octane's structure 1 – 4) ("the Lateral Restraining Structure"). As I have already pointed out, the Q45 and Q47 have structure that is the same as the Crank Shaft Connection. I will now explain why the Q45 and Q47 also have structure that is equivalent to the Lateral Restraining Structure. The Lateral Restraining Structure identified by Octane includes the combination of a C-Shaped channel attached to the upright of the frame and a pin-with-flared-head attached to the first end of

	the stroke rail that rides within the channel. The Q45 and Q47 also have structure that guides reciprocation of the first end of the stroke rail. That structure includes Stability Links and the associated pivot axles, nuts, washers, retaining rings and other structures attaching a Stability Link to the frame and the first end of a stroke rail. The structure in the Q45 and Q47 is equivalent to the Lateral Restraining Structure identified by Octane. The Stability Links are pivot arms that accomplish the function of the C-shaped channel in substantially the same way to achieve the same result as the C-shaped channel identified by Octane. **Function:** Both the C-shaped channel and Stability Links limit lateral movement of the first end of the stroke rail.

	Way: Both the C-shaped channel and Stability Links limit lateral movement of the first end of stroke rail via rigid metal constraint. **Result:** The first ends of the stroke rails are guided through reciprocating transverse motion while unwanted lateral motion is limited. **Known Interchangeability:** In mechanics, trapping a moving object in a track and tethering a moving object to a ridged pivoting are known to be interchangeable ways to limit the object from moving in an undesirable direction while, at the same time, allowing movement of the object in a desired direction. Deposition of William Dalebout, pp. 49 – 50. For all of the foregoing reasons, the corresponding structure in the '710 patent identified by Octane is equivalent to the analogous structure in the Q45 and Q47 devices.

Appendix N

'710 Patent – Claim 1, Element (e) (Octane Construction)	**Matching Features in Q45 and Q47**
(e) means for selectively varying the size of the substantially elliptical path that the second end of each stroke rail travels. **Octane's proposed construction:** This is a means plus function element to be construed pursuant to 35 U.S.C. §112, ¶6. **Function:** selectively varying the size of the substantially elliptical path that the second end of each stroke rail travels. **Corresponding Structure:** Octane's corresponding structure is reproduced at Appendix C. The structure identified by Octane as corresponding to the "motorized adjustment arm embodiment"	**Function:** Through observation and analysis of the actual devices in operation and analysis of computer models, I have confirmed that the Q47 and Q45 perform the function of this element as construed by Octane. Specifically, the size of the substantially elliptical path that the second end of each stroke rail can be selectively varied. **Structure:** **Q45 and Q47** – both devices have structure that is equivalent to the structure performing this function as defined by Octane's claim construction as the "motorized adjustment arm embodiment."

Appendix N

include: electric motor, bracket, gear, engagement bar, teeth, adjustment arm, rod, biasing mechanism, pin, nut, flared head, and c-shaped channel.	The Q45 and Q47 both have electric motors that rotate a screw that results in selective variation of the size of the substantially elliptical path. Octane drawings: OCTANE 00039, 000347, 021175. Both the mechanism described in OCTANE's claim construction (rack and pinion) and the mechanism used in the Q45 and Q47 devices (power screw or lead screw) perform the claimed function through substantially the same way to achieve the same result. Additionally, rack and pinions and powers screw are known to be interchangeable systems for accomplishing the same result. **Function:** Both mechanisms vary the size of the substantially elliptical path that the second end of each stroke rail travels. **Way:** Both mechanisms transform the rotary motion of an electric motor to transverse motion. The gear

	of the rack and pinion traverses the teeth of the associated bar in a very similar way that the nut of a power screw traverses the threads of the associated screw. **Result:** These mechanisms increase/decrease the effective distance between two pivot points which in turn varies the size of the substantially elliptical path. **Known Interchangeability of structure:** In mechanics, power screws and rack and pinion devices are known to be interchangeable systems in many applications. Deposition of J. Halfen, pp. 29 – 31, Deposition of N. Lugar, 47 – 51.

'710 Patent – Claim 2, Element (iii) (Octane Construction)	**Matching Features in Q45 and Q47**
(iii) means for coupling each crank arm to a corresponding stroke rail so as to enable free rotation of the axle	**Function:** Through observation and analysis of the actual devices and associated drawings, I have confirmed

Appendix N

Octane's proposed construction: This is a means plus function element to be construed pursuant to 35 U.S.C. §112, ¶6. **Function:** Coupling each crank arm to a corresponding stroke rail so as to enable free rotation of the axle. **Corresponding Structure:** Pins 104 and 105, Collars 106 and 107, Spot Welds that hold collars to stroke rails, nuts and washers at the end of Pins 104 and 105.	that the Q45 and Q47 perform the function of this element as construed by ICON. Specifically, each crank arm is coupled to a corresponding stroke rail so as to enable free rotation of the axle. **Structure:** I have confirmed that the Q45 and Q47 have structure that is equivalent to corresponding structure for performing this function as defined by Octane's claim construction (**). Specifically, the Q45 and Q47 have structure that performs the claimed function, in substantially the same way, to achieve substantially the same result. **Function:** Coupling each crank arm to a corresponding stroke rail so as to enable free rotation of the axle. **Way:** Providing a pin that projects from the crank arm through a collar rigidly

	associated with the stroke rail. **Result:** The pin is able to rotate within the collar but other movement is prevented. **Q45** – The Shoulder Screws (pins) project from the Crank Arms (crank arms) and extend through and are encircled by an aperture and Flange Bushing (collar) in the 3P Actuator Link (stroke rail). The Shoulder Screw can rotate within the aperture and Flange Bushing but other movement is limited. The Crank Arms are rigidly connected to the opposing ends of a Crank Shaft (axle), which remains free to rotate. The aperture is not spot welded to the stroke rail but rigidly associated with stroke rail. The end of the Shoulder Screw is not retained by a nut and

	washer but by a flanged head. It is my opinion that the differences between these structures are insubstantial. Drilling an aperture and welding a metal tube to a structure are known to be interchangeable for providing a circular receiving connection to the structure. A nut and a flanged head are also interchangeable structures for retaining a pin. **Q47** - The Crank Arm Shafts (pins) project from the Crank Arms (crank arms) and extend through and are encircled by the Swing Arm Hub and Flanged Bearing (collar) of the 3P Link Assembly (stroke rail). The Swing Arm Hub is a metal cylinder that is attached via welding. The Crank Arm Shafts can rotate within the Hub but other movement is limited. The Crank Arms are rigidly connected to the

Appendix N

	opposing ends of the Crank Shaft (axle) which remains free to rotate. Instead of a washer and nut, the end of the Crank Arm Shaft is retained by a washer and retaining ring. It is my opinion that the differences between these structures are insubstantial. Certainly a retaining ring is known to be interchangeable with a nut. **I understand that Octane has conceded that the function of this element is accomplished by the Q47 device. In the event Octane does not make the same concession with respect to the Q45 device, I may testify that the functioning of the two devices are sufficiently similar, or identical, that Octane's concession with respect to the Q47 should be applied to the Q45.**

Appendix N

Octane's Claim Chart

I have reviewed Defendant Octane Fitness' Claim Chart providing Octane's non-infringement arguments as they relate to the Q47 device. In the event Octane submits a claim chart challenging infringement of the Q45, I reserve the right to address those arguments. Additionally some of these arguments provided in Octane's claim chart related to speculation concerning potential mechanical problems associated with the design of the '710 patent (*i.e.*, excessive friction, binding, slop, twisting, backlash, etc.). I have not been provided with any facts to support these statements. If materials concerning these allegations are presented, or if Octane's expert(s) intend to testify about these allegations, I reserve the right to supplement this report to address this evidence or opinion.

Exhibits:

I intend to use exhibits (including demonstrative exhibits I have not yet created) at trial to summarize my opinions including, among other things, claim charts, Octane documents, excerpts from depositions taken in this case, photographs and videos of the accused devices, the actual accused devices, and representation of the data I have collected in generating the computer models described above (*i.e.*, still tracings and/or motion videos).

Appendix N

See Supplemental Appendix at Page SA-53

U.S. Patent No. 5,707,321

APPENDIX O — DEFENDANT OCTANE FITNESS' CLAIM CHART, DATED AUGUST 26, 2009

IN THE UNITED STATES DISTRICT COURT FOR
THE DISTRICT OF MINNESOTA
FOURTH DIVISION

Case No: 0:09-cv-00319 (ADM/SRN)

ICON HEALTH & FITNESS, INC.,
a Delaware corporation,

Plaintiff,

vs.

OCTANE FITNESS, LLC,
a Minnesota limited liability company,

Defendant.

DEFENDANT OCTANE FITNESS' CLAIM CHART

Pursuant to the Court's April 1, 2009 Pretrial Scheduling Order, Octane Fitness ("Octane") submits the below Defendant's Claim Chart in answer to Plaintiff's Claim Chart that was served on Octane on July 23, 2009. More specifically, Plaintiff Icon Health & Fitness, Inc. ("Icon") has asserted that Octane has infringed claims 1-5, 7, and 9-11 of U.S. Patent No. 6,019,710 ("the '710 patent"). Further, the Court's Pretrial Scheduling Order required Icon to provide its complete contentions

regarding infringement, including "where each element of each claim listed...is found in each product" accused by Icon. Icon only provided its contentions with regard to purported direct infringement by the Q47 family of elliptical machines sold by Octane (Q47, Q47e, Q47ce, and Pro4700) (hereinafter referred to collectively as the "Q47 Machine"). Octane responds to those contentions in the Claim Chart below:

Claim Elements from '710 Patent	Octane's Contentions Regarding the Presence/Absence of Such Claim Elements
1. An exercise apparatus comprising:	
(a) a frame configured for resting on a ground surface;	Octane admits that the Q47 Machine contains this element.
(b) a pair of spaced apart foot rails each having a first end and an opposing second end, each foot rail being configured to receive a corresponding foot of a user;	Octane admits that the Q47 Machine contains this element.
(c) a pair of stroke rails each having a first end and an opposing second end, the second end of each stroke rail being hingedly attached to the first end of a corresponding foot rail;	Octane admits that the Q47 Machine contains this element.

(d) means for connecting each stroke rail to the frame such that linear reciprocating displacement of the first end of each stroke rail results in displacement of the second end of each stroke rail in a substantially elliptical path; and	The Q47 Machine does not contain this element. This claim is written in means-plus-function form and is subject to 35 U.S.C. §112 ¶6. The function recited in this element is: "connecting each stroke rail to the frame such that linear reciprocating displacement of the first end of each stroke rail results in displacement of the second end of each stroke rail in a substantially elliptical path." The structure from the specification of the '710 patent that corresponds to this function is found at column 4, lines 3-56 and can be seen in Figures 1-5. As is clear from even a quick comparison the Q47 Machine and the '710 specification, the Q47 Machine does not have the same structure as that set forth in the '710 patent specification for performing the recited function. Further, the Q47 Machine cannot be said to contain an equivalent of that structure, pursuant to 35 U.S.C. §112 ¶6, because it does not perform the same function as that listed in this element. More specifically, the "first end" of the "stroke rail" in the Q47 Machine does not move in a linear, reciprocating motion. Instead, that end of the stroke rail travels on an arcuate path:

Appendix O

In sum, the Q47 Machine does not literally infringe this element because it does not have the same or equivalent structure as that required by this claim pursuant to 35 U.S.C. §112 ¶6.

Icon has failed in its burden to assert that this element is met pursuant to the Doctrine of Equivalents. The Court's Pretrial Scheduling Order required that any Icon contentions relating to the Doctrine of Equivalents should have been provided in Icon's July 23, 2009 Claim Chart. Icon failed to provide any such

	contentions. Despite that fact, Octane states that the differences between its Q47 Machine and this element of the claim 1 of the '710 patent are more than insubstantially different; indeed, they are substantially different. Support for this contention includes: 1) The linear track arrangement (C-shaped channel 84 and flared head 82), that allows for the linear, reciprocating displacement of the first end of the stroke rail, is subject to slop. More specifically, both sides of flared head 82 cannot simultaneously contact the opposite sides of the track or it will not rotate freely. This slop will cause undesirable noise and significantly diminish the smoothness and feel of the ride for the elliptical user. The rotational adjustment mechanism that Octane uses does not have the same limitations. 2) To the extent the flared head 82 does simultaneously contact both sides of the C-shaped channel 84, that linear track arrangement is subject to excessive friction, binding, undesirable noise, and/or premature wear. Further, this type of design would require the flared head 82 and C-shaped channel 84 to be precision machined, adding significant cost. The

	rotational adjustment mechanism that Octane uses does not have the same limitations. 3) The axle 76 from the '710 patent that attaches the flared head 84 to the stroke rail must be long to provide clearance over the annular flywheel 110 and to provide sufficient distance between the foot rails 50 and 52. This additional length causes the flared head 84 to be several inches out of plane from the stroke rail, which will cause twisting in the stroke rail, undesirable noise, an unsmooth ride, and premature wear. The link connection of the Octane machines is much more in-plane with the stroke rail, which minimizes any twisting effect. 4) Relatedly, because the axle 76 that attaches the flared head 84 to the stroke rail must be long to provide clearance over the annular flywheel 110 and to provide sufficient distance between the foot rails 50 and 52, the axle 76 will twist out of perpendicular with the track, which will tend to cause the roller to skew inboard and outboard as it rolls in the track, causing undesirable noise, an unsmooth ride, and premature wear. The link connection of the Octane machines is much more in-plane with the stroke rail, which minimizes any twisting effect.

	5) The lower end of the C-shaped channel 82 must be positioned adequately above the annular flywheel 110 to ensure those parts do not interfere with each other. This has a profound effect on the proportions of the stroke rail and the dimensions of the operating envelope required for the mechanism of the '710 patent. The link connector of the Octane machine allows for a greater than 50% reduction in the required operating envelope, saving considerable cost and adding significantly to the appearance of the elliptical machine.
(e) means for selectively varying the size of the substantially elliptical path that the second end of each stroke rail travels.	The Q47 Machine does not contain this element. This claim is written in means-plus-function form and is subject to 35 U.S.C. §112 ¶6. The function recited in this element is: "selectively varying the size of the substantially elliptical path that the second end of each stroke rail travels." The structure from the specification of the '710 patent that corresponds to this function is found at column 6, lines 8-42 and 49-67, and can be seen in Figures 5-6. As is clear from even a quick comparison of the Q47 Machine and the '710 specification, the Q47 Machine does not have the same structure as that set forth in the '710 patent specification for performing the recited function.

	For example, in a first embodiment of the "means for selectively varying..." from the '710 patent, shown below, the length of the stroke rail is selectively varied in a linear direction through the use of a plurality of holes (148) extending along the length of an adjustment arm (142) that slides inside the stroke rail (70) and a complementary hole on the stroke rail. Once the adjustment arm is slid to a desired position, a pin is passed through the aligned holes to retain the adjustment arm in the desired position. *See* Figure 5 and column 6, lines 19-28 (hereinafter referred to as the "Manual Adjustment Arm Embodiment"). 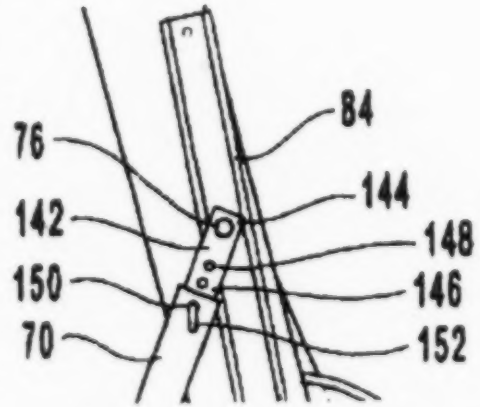

	The second, and only other, embodiment of the "means for selectively varying..." from the '710 patent, shown below, the length of the stroke rail is selectively varied in a linear direction through the use of an electric motor (154) mounted to the second end of the stroke rail by a bracket (156). An engagement bar (160) can be driven by the motor in a linear fashion through the use of a gear (158). The engagement bar is also attached to the adjustment arm (142) such that, when the engagement bar is varied in length, it effectively varies the length of the overall slide rail. *See* Figure 6 and column 6, lines 49-67 (hereinafter referred to as the "Motorized Adjustment Arm Embodiment"). 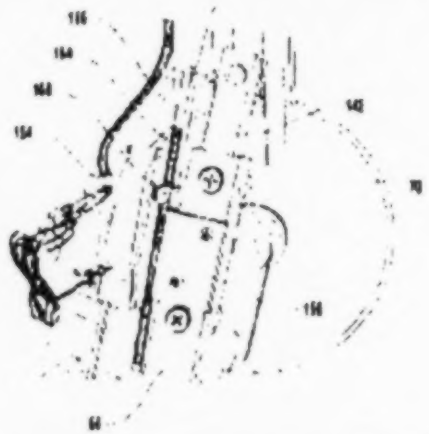

Appendix O

	The Q47 Machine contains no structure that is the same or even remotely similar to the Manual Adjustment Arm Embodiment. As compared to the Motorized Adjustment Arm Embodiment, the Q47 Machine does have a motor (reference numeral 17, below), but that is where the similarities end. As shown below, the motorized actuator of the Q47 machine is mounted on the first end of the stroke rail (which end is near the floor, opposite the location of the first end from the '710 patent). Extending from the motorized actuator is an integrated screw. The integrated screw is, in turn attached to a first end of the actuator swingarm (reference numeral 8, below). The second end of the actuator swingarm is attached to the middle of the stroke rail. To selectively vary the size of the elliptical path that the second end of each stroke rail travels, the motorized actuator causes the integrated screw to spin. This spinning action, in turn, causes the first end of the actuator swingarm to rotate either towards or away from the first end of the stroke rail (to which the motorized actuator is attached) – changing the angle of the stroke rail. This ability of the stroke rail to change angles effects the size of the elliptical path of the second end of the stroke rail.

Appendix O

This structure has considerable advantages over the structure described in the '710 specification, including:

1) The motorized actuator in the Octane design is a common one used in many applications (including, for example, other exercise machines like treadmills). This will make the actuator more cost effective than the gear drive actuator disclosed in the '710 patent.

	2) The rack and pinion actuator arrangement disclosed in the '710 patent will normally have some amount of backlash between the gear teeth, affecting the smoothness and feel of the machine. The Octane design, with an integrated screw, does not have this disadvantage. 3) The rack and pinion actuator arrangement disclosed in the '710 patent does not appear to have an adequate gear ratio to prevent back driving of the rack, which would cause unintentional changes in the size of the elliptical path that the second end of each stroke rail travels, without user input. 4) The '710 patent discloses a "tube in tube" arrangement (adjustment arm 142 slides within stroke rail 70) that has manufacturing deficiencies that may adversely affect the performance of the adjustment mechanism, including that there is a potential for slop between the adjustment arm 142 and the stroke rail 70 (or whatever type of internal

	anti-friction bushing may be is used in the stroke rail, though none is disclosed in the '710 patent). This structure negatively affects the smoothness and feel of the machine. 5) The '710 patent discloses a "tube in tube" arrangement (adjustment arm 142 slides within stroke rail 70) that has manufacturing deficiencies that may adversely affect the performance of the adjustment mechanism, including that there is the potential for relatively high sliding forces in the tube in tube joint due to binding or interference if all clearance is removed. This would put excessive load on the actuator or cause the two actuators to adjust at different rates. 6) The '710 patent discloses a "tube in tube" arrangement (adjustment arm 142 slides within stroke rail 70) that has manufacturing deficiencies that may adversely affect the performance of the adjustment mechanism, including that the force the actuator applies to the tube in tube joint also induces a moment (bending) load in the joint which could cause the joint to bind.

	7) The motor wires for the motor of the '710 patent (shown in Figure 6) require large free-standing length to alleviate flexing as they span from the stroke rail to the frame. This causes noise as the wires flop around within the machine, causes the wires to prematurely fail due to cyclic fatigue, and creates challenges with keeping the wires from tangling with the mechanism. The Octane link connection routes the wires in a much more controlled path along the links and across pivotal joints, which allows for much better control over wire flexing.
2. An exercise apparatus as recited in claim 1, wherein the means for connecting comprises:	The Q47 Machine does not infringe Claim 2 for the same reasons set forth above with respect to Claim 1, from which Claim 2 depends.
(i) an axle having opposing ends, the axil being rotatably mounted to the frame;	Octane admits that the Q47 Machine contains this element.

(ii) a crank arm rigidly mounted on each opposing end of the axil; and	Octane admits that the Q47 Machine contains this element.
(iii) means for coupling each crank arm to a corresponding stroke rail so as to enable free rotation of the axle.	The Q47 Machine does not contain this element. This claim is written in means-plus-function form and is subject to 35 U.S.C. §112 ¶6. The function recited in this element is: "coupling each crank arm to a corresponding stroke rail so as to enable free rotation of the axle." The structure from the specification of the '710 patent that corresponds to this function is found at column 4, lines 43-56 and can be seen in Figures 1-5. More specifically, the structure that performs the function of coupling the crank arm to the stroke rail from the '710 patent is, on one side of the elliptical machine, distal end of the crank arm (102), a pin that projects outwardly from the distal end of the crank arm (104), collar (106) that freely encircles the pin, and a spot weld that secures the collar to the stroke rail.

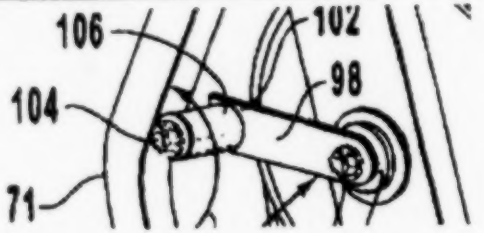

By stark comparison, the Q47 Machine does not have the relatively direct connection of the crank arm to the stroke rail. Instead, the crank arm is connected to a shaft that is inserted through approximately the middle of the swingarm, discussed above. One end of the swing arm is attached to an integrated screw from the motorized actuator and the other end is bolted to the stroke rail. This design allows for all of the advantages discussed above with regard to claim 2, which advantages are incorporated herein by reference.

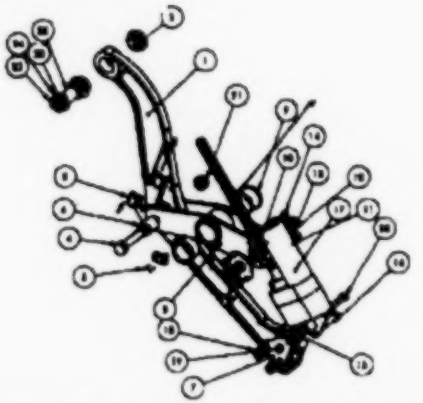

3. An exercise apparatus as recited in claim 2, wherein the means for coupling comprises:	The Q47 Machine does not infringe Claim 3 for the same reasons set forth above with respect to Claims 1 and 2, from which Claim 3 depends.
(i) a pin projecting from each crank arm; and	Octane admits that the Q47 Machine contains this element.
(ii) a tubular sleeve rotatably disposed over each pin, each tubular sleeve being rigidly secured to a corresponding stroke rail.	The Q47 Machine does not contain this element. There is no tubular sleeve in the Q47 Machine that is disposed over each pin (called a shaft on the Q47 Machine). Instead, there are two separate bearings that are at least partially disposed over that shaft.
	Even if the bearings could be deemed a "tubular sleeve," however, the bearings are clearly not rigidly secured to the stroke rail. Instead, they are rotatably secured to the swing arm. It is the swing arm that is rotatably secured (not rigidly secured) to the stroke rail.

Appendix O

4. An exercise apparatus as recited in claim 2, further comprising	The Q47 Machine does not infringe Claim 4 for the same reasons set forth above with respect to Claims 1 and 2, from which Claim 4 depends.
means for conserving momentum generated by rotation of the axil.	Octane admits that the Q47 Machine contains this element.
5. An exercise apparatus as recited in claim 4, wherein the means for conserving momentum comprises:	The Q47 Machine does not infringe Claim 5 for the same reasons set forth above with respect to Claims 1 and 2, from which Claim 5 depends.

In fact, Octane simply fails to address the objective merits of this argument at all. The Court relied on the doctrine of "vitiation" to reject it, reasoning that the slight arc in Octane's machine was a "difference in kind" rather than a "difference in degree" from a straight-line path. (Dkt. 187, p. 17.) Octane can hardly be said to have proven, by clear and convincing evidence, that it was manifestly unreasonable for ICON to argue the contrary view that a *slight* deviation from a straight line is a "difference in degree" rather than a "difference in kind"—particularly in view of Dr. Rasty's unrebutted testimony to the same effect.[3]

ICON's infringement contention with respect to the "means for connecting" element was supported by three layers of argument—each of which Octane must prove, by clear and convincing evidence, was objectively baseless. Octane addressed the first, but as explained above failed to prove it objectively baseless. Octane addressed only a mischaracterization of the second, and ignored the third altogether. Octane can hardly be said to have satisfied its heavy burden of proving, by clear and convincing evidence, that ICON's positions were without merit.[4]

---

3. ICON, respectfully, continues to believe that the Court incorrectly resolved genuine issues of material fact against ICON on this point, and has noticed an appeal of the Court's ruling on this point among others. (Notice of Appeal, Dkt. 200.)

4. In addition to finding that the function associated with the "means for connecting" element was not present in Octane's machines, the Court also found that there was no "equivalent" of the structure associated with the "means for connecting" element. (Summary Judgment Order at 19-20). ICON's positions

C. Octane's Own Conduct, Both Before and During the Case, Establishes that ICON's Claims Were Not Objectively Baseless

Octane's actions before and during the lawsuit belie any contention that ICON's positions lack merit, let alone that they were objectively baseless. Octane states that "[o]ther than being a front drive elliptical (which ICON did not invent) the commercially successful Q45 and Q47 elliptical machines are nothing like the commercially unsuccessful elliptical claimed in the '710 patent." (Mem. at 8, emphasis in original.) That is Octane's position now; however, before the case was filed at least two outside opinions of non-infringement were received by Octane, one by its licensors and a second commissioned by Octane from outside counsel. (January 18, 2010 deposition of Timothy Porth, pp. 75–88, Exh. C to the Hall Decl. A third outside opinion of non-infringement was commissioned

---

here were also reasonable. First of all, ICON contended that for the same reasons that the claimed function did not require "creating" linear reciprocating displacement, the corresponding structure did not include the C-channel. (Dkt. 131, pp. 17-23). That claim construction argument was reasonable. Under that claim construction, there would have been no dispute that Octane's machines had nearly *identical* structure to that disclosed. Second, ICON had an alternative argument that even if the C-channel was included as part of the corresponding structure, Octane's machines still had equivalent structure. That argument was supported, *inter alia*, by the testimony of Dr. Rasty. (Dkt. 175, pp. 30-34; Dkt. 173, p. 13). In ICON's estimation, that testimony created at least a genuine issue on the material issue of equivalence.

and received by Octane's patent insurance carrier. *Id.* In addition, after it received a cease and desist letter from ICON, Octane was sufficiently concerned about liability to hire a second attorney to provide yet another opinion of non-infringement of the '710 patent. *Id.* In sum, Octane and its business affiliates (licensors and insurance carrier) obtained four separate opinions analyzing potential infringement of its elliptical products by the '710 patent. At least two of these opinions occurred before this case was filed. In the face of Octane's and its business associates' deep concern that the accused products infringed the '710 patent, Octane's present arguments that ICON's infringement positions are objectively baseless are directly contradicted by its own conduct and the actions of others with a stake in this lawsuit.

Octane also suggests that ICON's infringement positions were objectively baseless because "Octane's elliptical linkage is covered by a patent, U.S. Patent No. 5,707,321, that predates Icon's '710 patent." (Mem. at 3, emphasis in original.) Putting aside Octane's failure to suggest ICON was aware of the '321 patent or to even establish that its linkage is, in fact, based on the disclosure of the '321 patent, Octane's first Prior Art Statement in this case again contradicts its present position. Specifically, if the design of Octane's products was so closely tied to a design disclosed in a patent that was prior art to '710 patent, this would surely have been Octane's first line of defense. Remarkably, however, when Octane submitted Defendant Octane Fitness' Prior Art Statement it didn't rely upon the '321 patent. (Dkt. 99.) Octane didn't rely on the '321 patent as a defense until five months later when

it filed Octane's Supplemental Prior Art Statement (Exh. D to the Hall Decl.)

Certainly, objective baselessness cannot be established, let alone proved by clear and convincing evidence, through "facts" upon which Octane itself did not even rely until late in the case. This delay cannot be squared with Octane's present contention that at the time the suit was filed ICON knew or should have known that the accused products were a based on a prior art design. Certainly Octane's arguments based on the '321 patent provide no evidence that ICON's infringement positions were objectively baseless. To the contrary, Octane's conduct before and during the case suggests that it remained cognizant of its own exposure for infringement under ICON's infringement contentions. Octane's present arguments are simply the product of revisionist history.

D. Octane Has Not Presented Clear and Convincing Evidence of Bad Faith

As shown above, Octane has not proven that ICON's contentions were objectively baseless under the "exacting standard" prescribed by *Brooks*. As such, the Court need not consider the second prong of *Brooks*—subjective bad faith. Putting these arguments aside, Octane has fallen well short of establishing subjective bad faith by clear and convincing evidence. Specifically, Octane's primary argument with respect to the subjective prong is that "Icon's . . . bad faith [is] properly inferred from its pursuit of . . . frivolous claims." (Mem. at 15.) As shown below, this argument rests on legal error. And the emails

Octane describes as *direct* evidence of bad faith are simply immaterial because they are not at all probative of ICON's state of mind with respect to the objective merits.

1. Subjective Bad Faith Must Be Proven, Not Inferred from the Objective Merits

Octane's primary argument with respect to the subjective prong of the *Brooks* test is that "Icon's . . . bad faith [is] properly inferred from its pursuit of . . . frivolous claims." (Mem. at 15.) But "[i]nfringement is often difficult to determine, and a patentee's ultimately incorrect view of how a court will find does not of itself establish bad faith." *Brooks*, 393 F.3d at 1384; *see also iLOR*, 631 F.3d at 1379 ("the issues" in "routine question[s] of claim construction . . . are often complex and the resolutions not always predictable"; "Even when presented with 'simple' claim terms, courts may differ in their interpretation of those terms."); *Q-Pharma, Inc. v. Andrew Jergens Co.*, 360 F.3d 1295, 1301 (Fed. Cir. 2004) ("Claim interpretation is not always an exact science, and it is not unusual for parties to offer competing definitions of even the simplest claim language.") That is why *Brooks* reversed the trial court's determination of exceptionality. *See id.*

Under the "exacting standard" prescribed by *Brooks*, "the plaintiff's case must have no objective foundation, *and the plaintiff must actually know this.*" *iLOR*, 631 F.3d at 1377 (emphasis added). Moreover, "*[b]oth* the objective and subjective prongs . . . 'must be established by clear and convincing evidence.'" *Id.* (emphasis added; citation omitted). Octane relies primarily on *Eltech Systems Corp.*

v. PPG Industries, Inc., 903 F.2d 805 (Fed. Cir. 1990) and *MarcTec, LLC v. Johnson & Johnson*, 07-CV-DRH, 2010 WL 680490 (S.D. Ill. Feb. 23, 2010) to support its contention that bad faith (and thus exceptionality) could be inferred from a finding that ICON's infringement claim was objectively baseless. But Octane's reliance is misplaced.

The exceptionality determination upheld by *Eltech* was based, *inter alia*, on "many . . . findings . . . compatible with and only with" the view "that OxyTech *knew* its suit was baseless," *Eltech*, 903 F.2d at 810 (citation omitted, emphasis in original)—not merely on a determination that the suit *was* baseless.[5] The flaws in Octane's reliance on *Eltech* to bridge the gulf between ICON's loss on summary judgment and subjective bad faith closely parallel those recently exposed by another Judge of this Court in *MTS Systems Corp. v. Hysitron Inc.*, 639 F. Supp. 2d 996, 1002–03 (D. Minn. 2009) (citations omitted):

> To make a necessary leap, defendant apparently relies upon . . . *Eltech* . . . . The circuit court in *Eltech* noted the existence of overwhelming evidence indicating that the patentee in that case had actual knowledge that the suit was

5. The court in *Eltech* found that none of the opinions of plaintiff's expert were valid, leaving OxyTech with no evidence to support infringement either before or during the case. *Eltech* at 808, 810. Based on the Court's denial of Octane's motion to strike Dr. Rasty's testimony alone, that is not the case here.

> baseless . . . . In terms of application, the *Eltech* appellate decision is substantially more demanding than defendant . . . suggests, and is not inconsistent with the subsequently stated legal test whereby sanctions under 35 U.S.C. § 285 are appropriate only if (1) the litigation is commenced in subjective bad faith; and (2) the litigation is objectively baseless. *Brooks Furniture*, 393 F.3d at 1381.

MarcTec, in turn, did conclude that "pursuing a 'frivolous' lawsuit is treated as 'bad faith' and is sufficient to support an award of fees under § 285," 2010 WL 680490, at *7, but in so doing it committed legal error. Specifically, after noting, "MarcTec contends that subjective bad faith is needed to find a case exceptional," the court stated, "[t]hat is not the law"; and then pronounced the principle quoted above and espoused by Octane. *Id.* But according to the Federal Circuit, that *is* the law—at least "[a]bsent misconduct in conduct of the litigation or in securing the patent," which Octane has not alleged. *Compare Brooks*, 393 F.3d at 1381 ("Absent misconduct in conduct of the litigation or in securing the patent, sanctions may be imposed against the patentee only if both (1) the litigation is brought in subjective bad faith, and (2) the litigation is objectively baseless.") *with MarcTec*, 2010 WL 680490, at *10 (citation omitted) ("MarcTec contends that filing and litigating a baseless or frivolous lawsuit is not sufficient to make a case exceptional under § 285 absent subjective bad faith. That is not correct.").

The only other case that Octane cites where exceptionality was found, based on the frivolity of an infringement claim, is *Kaehni v. Diffraction Co.*, 342 F. Supp. 523 (D. Md. 1972). That case substantially predated and therefore did not have the benefit of guidance from *Brooks*, and apparently made the same error of law as *MarcTec*. *See Kaehni v. Diffraction Co.*, 342 F. Supp. 523, 535 (D. Md. 1972) ("This Court now holds that a case can be 'exceptional' within the meaning of § 285 where the allegation of infringement is frivolous and/or asserted without reasonable care and sufficient justification."); *but see id.* ("If qualitatively the plaintiff has acted unjustifiedly, and if quantitatively his conduct makes it unconscionable for the alleged infringer to bear his own attorneys' fees, the terms of § 285 have been satisfied."). Moreover, in that case there was misconduct in the litigation, *see, e.g., id.* at 536 ("Plaintiffs' complete lack of candor in answering interrogatories and requests for admission . . . was such as to render their subsequent conduct in bad faith."), which is another special circumstance not alleged here, *see Brooks*, 393 F.3d at 1381 ("A case may be deemed exceptional when there has been . . . misconduct during litigation").

Octane has not cited any controlling or even persuasive authority for the proposition that ICON's subjective state of mind, and thus exceptionality, could properly be inferred from the objective merits of ICON's infringement contentions.[6] Octane cannot escape the

---

6. Of the nine Federal Circuit opinions cited by Octane, only *Eltech* upheld an exceptionality determination against a patentee. Two more upheld the *amounts* awarded against patentees but did not address the underlying exceptionality determinations. *See*

requirement to prove, by clear and convincing evidence, *both* that ICON's case had "no objective foundation" *and* that ICON "actually kn[e]w this." *See iLOR*, 631 F.3d at 1377.

2. Octane Offers No Independent Evidence of Bad Faith

According to Octane, "[a]n internal Icon email chain is the starting point in showing why this case is exceptional." (Mem. at 1.) The thread begins with an internal, August 24, 2008 email reporting,

---

Automated Bus. Cos. v. NEC America, Inc., 202 F.3d 1353, 1355 (Fed. Cir. 2000) ("On appeal, ABC only challenges the amount of the . . . award . . . . ABC does not challenge the . . . finding that the case was exceptional or the discretionary decision to award fees. . ."); *Mathis v. Spears*, 857 F.2d 749, 751 (Fed. Cir. 1988) ("Appeals and cross-appeals from a judgment . . . setting the quantum of previously granted awards of attorney fees and expenses."). Faced with a dearth of Federal Circuit authority, Octane cites four district court opinions (two published, two unpublished) that made exceptionality determinations against patentees. Two are discussed in the text above. Another based its determination on "inequitable conduct before the Patent and Trademark Office." *Synthon IP, Inc. v. Pfizer Inc.*, 484 F. Supp. 2d 437, 442 (E.D. Va. 2007). Inequitable conduct is a special circumstance, *see Brooks*, 393 F.3d at 1381 ("A case may be deemed exceptional when there has been . . . inequitable conduct in procuring the patent"), not alleged here. The determination in the last case was based on validity rather than infringement. *See Realtek Semiconductor Corp. v. Marvell Semiconductor, Inc.*, No. C-04-4265 MMC, 2005 WL 3634617 (N.D. Cal. Nov. 21, 2005).

> We are suing Octane. Not only are we coming out with a great product to go after them, but throwing a lawsuit on top of that.

(*Id.*) That message was forwarded the next day to a person Octane describes as "a potential customer/retailer" (Mem. at 10) with the following preface:

> Just clearing the way and making sure you guys have all your guns loaded! Look below!

(Mem. at 2.) The third and final message in the "chain" was sent more than a year later, by the sender of the original message to the sender of the second:

> Yes – old patent we had for a long time that was sitting on the shelf. They are just looking for royalties.

(*Id.*)

But there is nothing improper about "throwing a lawsuit" on top of a competitive product offering (or filing suit without introducing a competing product, for that matter), or "looking for royalties" from an "old patent . . . that was sitting on the shelf." Industry players like ICON (and Octane) invest in patents precisely because they *are* "competitive weapon[s]," (*see* Mem. at 4), and infringement suits between industry participants are "brought for competitive gain," (*see* Mem. at 16). *Cf. Brooks*, 393 F.3d at 1384 ("That Dutailier is a larger company than Brooks, that it has sued others, and that it

was unwilling to grant a license, are not indicative of bad faith."). That is the whole point of the patent system: to incentivize investment in invention by granting inventors and their assignees rights they can use in the marketplace.

Under the "exacting standard" prescribed by *Brooks*, "the plaintiff's case must have no objective foundation, and the plaintiff must actually know this." *iLOR*, 631 F.3d at 1377. None of the emails Octane says are "the starting point" can constitute evidence of bad faith because none discloses anything about ICON's state of mind with respect to its substantive positions.

The only other argument Octane offers is that the objective merits "should have been readily apparent to Icon when it filed this suit" because "Icon had only to purchase one of Octane's elliptical machines . . . and remove the housing to see that the linkage mechanism of Octane's ellipticals was nothing like that of the '710 patent." (Mem. at 15.) Octane's Q47 elliptical *was* purchased and examined before suit was commenced.[7] But ICON could not learn from its examination of the physical structure of the accused devices how the Court would ultimately rule on infringement or the related claim construction issues, and it is those rulings—not the physical structure of the accused devices, which was thoroughly investigated before litigation was commenced and never really in dispute. Octane offers no evidence whatsoever that ICON had

7. ICON learned through discovery of the existence of an earlier and discontinued Octane elliptical, the Q45. Octane ultimately produced that device for inspection as it was no longer offered for sale.

actual (or even constructive) foreknowledge of the Court's claim constructions or rulings on infringement; and without such foreknowledge, the fact that ICON simply did not correctly anticipate how the Court ultimately ruled cannot warrant a finding of bad faith. *See Brooks*, 393 F.3d at 1384 ("Infringement is often difficult to determine, and a patentee's ultimately incorrect view of how a court will find does not of itself establish bad faith."); *see also iLOR*, 631 F.3d at 1379 ("Even when presented with 'simple' claim terms, courts may differ in their interpretation of those terms."); *Q-Pharma, Inc. v. Andrew Jergens Co.*, 360 F.3d 1295, 1301 (Fed. Cir. 2004) ("Claim interpretation is not always an exact science . . ."). As such, Octane's arguments concerning ICON's investigations of its devices cannot establish subjective bad faith.

E. Octane's Alternative Arguments Are Unpersuasive

To no apparent purpose, but with too great frequency to ignore, Octane argues it did not "copy" ICON's invention, that there is a prior patent on the "linkage system" in its treadmills, and that the embodiment described in the '710 patent was not "commercially viable." None of these is probative of the objective merits of ICON's claim or ICON's subjective state of mind with respect thereto.

First, "independent development"—the opposite of copying—"does not excuse infringement of the patent" because "[i]nfringement is . . . a strict liability offense." *Hilton Davis Chem. Co. v. Warner-Jenkinson Co.*, 62 F.3d 1512, 1520, 1527 (Fed. Cir. 1995) (*en banc*) *rev'd on other grounds*, 520 U.S. 17, 117 S. Ct. 1040, 137 L. Ed. 2d 146

(1997). The fact that Octane's machine may not *look* the same as the embodiment described in ICON's patent is irrelevant. It is the claims in ICON's patent that define the patented invention, not the drawings. *SRI Int'l v. Matsushita Electric Corp.*, 775 F.2d 1107, 1121 (Fed. Cir. 1985) (*en banc*) ("Infringement, literal or by equivalence, is determined by comparing an accused product not with a preferred embodiment described in the specification, or with a commercialized embodiment of the patentee, but with the properly and previously construed claims in suit.").

Second, the patent to which Octane refers (the '321 patent) does not prove anything. Assuming Octane's products do in fact incorporate the '321 patent, all that the patent to which Octane refers could establish is that the "linkage system" in its treadmills (an element or elements of ICON's claim and an element or elements of Octane's machine) were together in combination in the prior art. But Octane has not established that the *entire combination* of elements required by ICON's claim (and the combination of elements found in Octane's machine) are in the prior art. Most significantly, the prior art patent referred to by Octane does not have a "means for selectively varying...." required by claim 1. The Court found that ICON had established a genuine issue that Octane's machines *do* have that element. (Dkt. No. 187, pp. 23-24).

Thus, infringement by Octane's machine would not encroach upon the prior art '321 patent. Moreover, the prior art certainly does not have the additional limitations

found in the dependent claims. As the Federal Circuit has made clear, "that someone has a patent right to exclude others from making the invention claimed in his patent does not mean that his invention cannot infringe claims of another's patent." *Rolls-Royce Ltd. v. GTE Valeron Corp.*, 800 F.2d 1101, 1110 n.9 (Fed. Cir. 1986).

Third, Octane's comments about the "commercial viability" of the embodiment disclosed in the figures of ICON's patent are irrelevant and grossly misleading. As ICON explained in its opposition to Octane's motion for summary judgment, ICON did not build a commercial embodiment of the '710 patent because the sales department and the management of the company concluded that the offerings that ICON had in the marketplace were sufficient. (Dkt. 175, pp. 52-53). Moreover, Octane relies for its assertions about "viability" on the testimony of an expert that is unsupported by any study or analysis he has done on the accused devices or patented design (indeed he conducted no testing or studies at all).

Specifically Octane's expert based his opinion on an analysis of the drawings in the patent, which, by his own admission, disclose only the roughest form of prototype in the design process. He then took that analysis of the rough prototype, compared it to a commercial product, and concluded that the patented design must not be a commercially viable design because the prototype is not commercially viable. (Dkt. 175, pp. 46-48). This apples-to-oranges comparison manifests a completely irreconcilable disconnect with reality. Tellingly, the Court did not rely on any of Octane's assertions about the "commercial viability"

of ICON's product in its summary judgment decision. *See also International Visual Corp. v. Crown Metal Co.*, 991 F.2d 768, 771-72 (Fed. Cir. 1993) ("'Infringement is determined on the basis of the claims, not on the basis of a comparison with the patentee's commercial embodiment of the claimed invention.'").

F. An Award of Fees is Not Warranted Under the Circumstances

The traditional reasons for awarding fees to a prevailing defendant in a patent case are not present here. There has not been a judgment (or even an allegation) that the '710 patent was procured by fraud on the Patent Office. Likewise, Octane does not allege that ICON or its counsel "engaged in misconduct in conduct of the litigation" as found in the *Kaehni* case cited by Octane. *Brooks*, 393 F.3d at 1381; *Kaehni*, 343 F. Supp. at 536 ("Plaintiffs' complete lack of candor in answering interrogatories and requests for admission . . . was such as to render their subsequent conduct in bad faith."). Indeed, this Court declined to award attorney fees to a plaintiff in a patent case despite allegations of vexatious litigation tactics. *Upsher-Smith Lab., Inc. v. Pan American Lab., Inc.*, 2004 U.S. Dist. LEXIS 7274, at *4 ("This litigation has fallen short of the level of professionalism this Court expects from attorneys, but Upsher-Smith's actions are not sufficiently egregious to warrant it to pay Pamlab's attorney fees.")

To argue that the Court should award fees, Octane relies, in large part, on the arguments it presented in connection with its contention that this is an exceptional

case. ICON submits that the arguments presented above also establish that an award of fees is not warranted. Lastly, Octane contends that an award of fees is appropriate in this case "if [for] nothing else to discourage these sort of abusive litigation tactics by other companies in the future." (Mem. at 17.) Again, for each of the reasons articulated above, ICON had objectively reasonable bases for each of its contentions and no evidence exists to establish that it acted in bad faith. As such, ICON respectfully submits that and award of fees is not warranted in the present action.

III. CONCLUSION

Octane's motion should be denied because Octane has failed to prove either objective baselessness or bad faith by clear and convincing evidence.[8]

---

8. If the Court, however, finds the case exceptional, and exercises its discretion to award fees, it should defer setting the amount of the award until Octane makes the itemized submission required by Local Rule 54.3(b)(1) and provides supporting documentation as promised by Octane's Memorandum, and ICON has an opportunity to respond thereto. *See* Fed. R. Civ. P. 54 (d)(2)(C) ("the court must, on a party's request, give an opportunity for adversary submissions").

Appendix R

DATED: August 4, 2011

By: /s/_____
David R. Wright, UT Bar No. 5164
dwright@wnlaw.com
C. J. Veverka, UT Bar No. 7110
cveverka@wnlaw.com
H. Craig Hall, UT Bar No. 8691
chall@wnlaw.com
WORKMAN NYDEGGER
1000 Eagle Gate Tower
60 East South Temple
Salt Lake City, UT 84111

Lawrence M. Shapiro, P.A.,
Reg. No. 130886
lshapiro@greeneespel.com
Jeanette M. Bazis, Reg. No. 255646
jbazis@greeneespel.com
GREENE ESPEL, PLLP
200 South 6th Street, Suite 1200
Minneapolis, MN 55402-1415

Attorneys for Plaintiff
ICON HEALTH & FITNESS, INC.

APPENDIX S — OCTANE FITNESS' SUPPLEMENTAL PROPOSED CLAIM CONSTRUCTIONS, DATED JUNE 1, 2010

IN THE UNITED STATES DISTRICT COURT
FOR THE DISTRICT OF MINNESOTA
FOURTH DIVISION

Case No: 0:09-cv-00319 (ADM/SRN)

ICON HEALTH & FITNESS, INC.,
a Delaware corporation,

Plaintiff,

vs.

OCTANE FITNESS, LLC, a Minnesota
limited liability company,

Defendant.

DEFENDANT OCTANE FITNESS' SUPPLEMENTAL PROPOSED CLAIM CONSTRUCTIONS

Pursuant to the Court's revised Scheduling Order, and in light of Icon's October 23, 2009 Supplemental Claim Chart, Defendant Octane Fitness, LLC ("Octane"), hereby submits its proposed claim constructions and disclosure of the expert witness it proposes calling at the *Markman* hearing, with summary of each opinion he will offer:

Claim Elements from '710 Patent that Should be Construed by the Court	Octane's Proposed Claim Construction
Claim 1, element (c): A pair of ***stroke rails*** each having a first end and an opposing second end, the second end of each stroke rail being hingedly attached to the first end of a corresponding foot rail;	Octane's proposed claim construction: A linear or curved bar, which can be made to vary in length, extending from a foot rail to a frame on an elliptical machine. The intrinsic evidence that supports this construction includes: Figures 1-6 (showing either a curved or straight bar that extends from a foot rail to a frame on an elliptical machine); Col. 2, ll. 10-13 (connection to foot rail and frame); Col. 2, ll. 38-40 (curved or linear); Col. 2, ll. 42-51 (bar may be varied in length); Col. 3, l. 64 - col. 4, l. 3 (connection to foot rail and frame); Col. 4, ll. 18-23 (connection to foot rail and frame); Col. 5, ll. 43-45 (curved or linear); Col. 5, ll. 46-48 (connection to foot rail and frame); Col. 6, ll. 11-32 (bar may be varied in length); Claim language from element (c) (connection to foot rail and frame); Reasons for Allowance (connection to foot rail and frame): "a pair of stroke rails each having one end hingedly connected to a respective foot rail and having the opposite end connected to the frame..." Attachment A to this filing, comprising a 1997 dictionary definition of the term "rail."

Claim 1, element (d): means for connecting each stroke rail to the frame such that linear reciprocating displacement of the first end of each stroke rail results in displacement of the second end of each stroke rail in a substantially elliptical path; and	The function recited in this element, "connects each stroke rail to the frame such that linear reciprocating displacement of the first end of each stroke rail results in displacement of the second end of each stroke rail in a substantially elliptical path," requires no construction, as the plain and ordinary meanings of the terms used to describe the function are sufficiently clear. The structure from the specification of the '710 patent that corresponds to this function is: 1) Pin 76 (and the corresponding pin on the opposite side of the frame from pin 76, that is not labeled); 2) Nut 78 (and the corresponding nut on the opposite side of the frame from nut 78, that is not labeled); 3) Flared head 82 (and the corresponding flared head on the opposite side of the frame from flared head 82, that is not labeled); 4) C-shaped channel 84 (and the corresponding C-shaped channel on the opposite side of the frame from C-shaped channel 84, that is not labeled); 5) Axle 92; 6) Crank arms 98 and 100;

7) Nuts 94 and 96;
8) Pins 104 and 105 (pin 105 is not labeled in the Figures of the '710 patent);
9) Collars 106 and 107 (collar 107 is not labeled in the Figures of the '710 patent);
10) Spot welds that hold the two collars, referenced in 9) above, to the stroke rails 66 and 68; and
11) Nuts/washers at the end of pins 104 and 105.

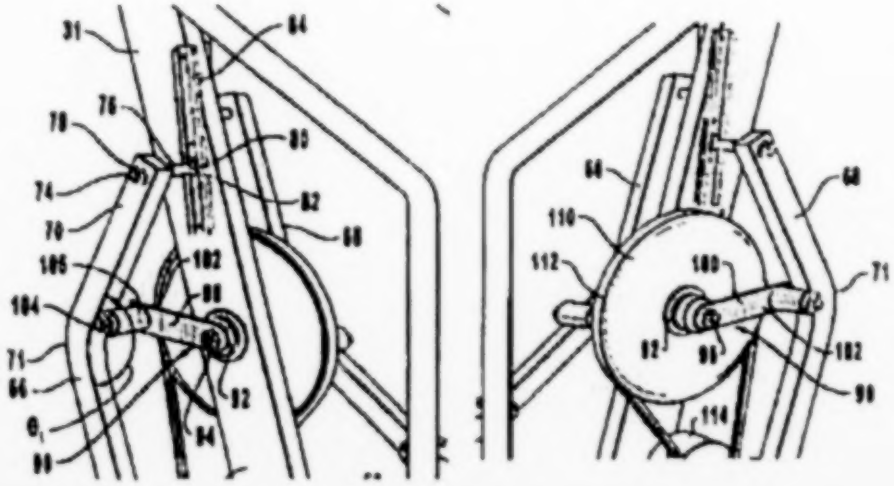

	The intrinsic evidence that supports this claim construction includes: (a) '710 patent at column 4, lines 3-61; (b) Figures 1-5; (c) '710 patent at column 2, lines 12-21; (c) '710 patent at column 2, lines 26-27; and (d) Patent Office examiner's Reasons for Allowance, including the statement that "[t]he prior art fails to show or teach applicant's claimed apparatus comprising...a pair of stroke rails each having one end hingedly connected to a respective foot rail ***and having the opposite end connected to the frame for linear reciprocating movement and for producing an elliptical path.***" (emphasis added).
Claim 1, element (e) means for selectively varying the size of the substantially elliptical path that the second end of each stroke rail travels.	The function recited in this element, "selectively varying the size of the substantially elliptical path that the second end of each stroke rail travels," requires no construction, as the plain and ordinary meanings of the terms used to describe the function are sufficiently clear. There are two embodiments disclosed in the '710 patent that contain structure that corresponds to this function. The first embodiment is referred to herein as the "Manual Adjustment Arm Embodiment" and is shown in

	Figure 5. The structure from this embodiment that corresponds to the above-referenced function is: 1) Adjustment arm 142 (and the corresponding adjustment arm on the opposite side of the frame from adjustment arm 142, that is not shown in the Figures of the '710 patent); 2) Plurality of holes 148 (and the corresponding plurality of holes on the adjustment arm located on the opposite side of the frame from adjustment arm 142, that is not shown in the Figures of the '710 patent); 3) Complementary hole 150 located in stroke rail 66 (and the corresponding complementary hole in stroke rail 68, that is not shown in the Figures of the '710 patent); 4) Pin 152 (and the corresponding pin located on the opposite side of the frame from pin 152, that is not shown in the Figures of the '710 patent); 5) Pin 76 (and the corresponding pin on the opposite side of the frame from pin 76, that is not labeled); 6) Nut 78 (and the corresponding nut on the opposite side of the frame from nut 78, that is not labeled);

	7) Flared head 82 (and the corresponding flared head on the opposite side of the frame from flared head 82, that is not labeled); and 8) C-shaped channel 84 (and the corresponding C-shaped channel on the opposite side of the frame from C-shaped channel 84, that is not labeled). 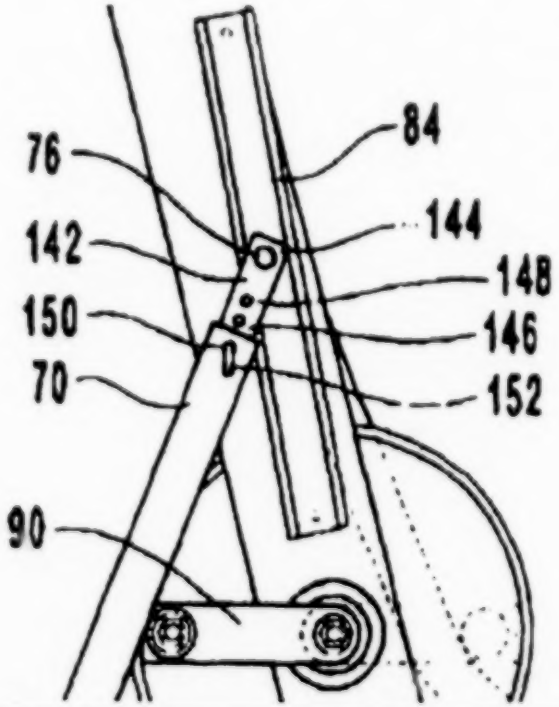

	The second embodiment is referred to herein as the "Motorized Adjustment Arm Embodiment" and is shown in Figure 6. The structure from this embodiment that corresponds to the above-referenced function is: 1) Electric motor 154 (and the corresponding electric motor located on the opposite side of the frame from electric motor 154, that is not shown in the Figures of the '710 patent); 2) Bracket 156 (and the corresponding bracket located on the opposite side of the frame from bracket 156, that is not shown in the Figures of the '710 patent) 3) Gear 158 (and the corresponding gear located on the opposite side of the frame from gear 158, that is not shown in the Figures of the '710 patent); 4) Elongated engagement bar 160 (and the corresponding elongated engagement bar located on the opposite side of the frame from elongated engagement bar 160, that is not shown in the Figures of the '710 patent); 5) Teeth 164 (and the corresponding teeth located on the opposite side of the frame from teeth 164, that are not shown in the Figures of the '710 patent);

	6) Adjustment arm 142 (and the corresponding adjustment arm located on the opposite side of the frame from adjustment arm 142, that is not shown in the Figures of the '710 patent); 7) Rod that connects elongated engagement bar 160 to adjustment arm 142 (and the corresponding rod located on the opposite side of the frame from the rod that connects elongated engagement bar 160 to adjustment arm 142, that is not shown in the Figures of the '710 patent); 8) Bias mechanism that biases engagement bar 160 against gear 158 (and the corresponding bias mechanism located on the opposite side of the frame from engagement bar 160 and gear 158, that is not shown in the Figures of the '710 patent); 9) Pin 76 (and the corresponding pin on the opposite side of the frame from pin 76, that is not labeled); 10) Nut 78 (and the corresponding nut on the opposite side of the frame from nut 78, that is not labeled); 11) Flared head 82 (and the corresponding flared head on the opposite side of the frame from flared head 82, that is not labeled); and 12) C-shaped channel 84 (and the corresponding C-shaped channel on the opposite side of the frame from C-shaped channel 84, that is not labeled).

Appendix S

The intrinsic evidence that supports this claim construction includes: (a) '710 patent at column 6, lines 8-67; (b) Figures 5-6; (c) '710 patent at column 2, lines 42-53; (c) '710 patent at column 4, lines 3-17; and (d) Patent Office examiner's Reasons for Allowance, including the statement that "[t]he prior art fails to show or teach applicant's claimed apparatus comprising...a pair of stroke rails each having one end hingedly connected to a respective foot rail and having the opposite end connected to the frame for linear reciprocating movement and for producing an elliptical path."

Claim 2, element (iii) means for coupling each crank arm to a corresponding stroke rail so as to enable free rotation of the axle.	The function recited in this element, "coupling each crank arm to a corresponding stroke rail so as to enable free rotation of the axle," requires no construction, as the plain and ordinary meanings of the terms used to describe the function are sufficiently clear. The structure from the specification of the '710 patent that corresponds to this function is: 1) Pins 104 and 105 (pin 105 is not labeled in the Figures of the '710 patent); 2) Collars 106 and 107 (collar 107 is not labeled in the Figures of the '710 patent); 3) Spot welds that hold the two collars, referenced in 2) above, to the stroke rails 66 and 68; and 4) Nuts/washers at the end of pins 104 and 105.

Appendix S

The intrinsic evidence that supports this claim construction includes:

(a) '710 patent at column 4, lines 43-56; (b) Figures 1-5; (c) '710 patent at column 2, lines 18-21; (c) Patent Office examiner's Reasons for Allowance, including the statement that "[t]he prior art fails to show or teach applicant's claimed apparatus comprising...a pair of stroke rails each having one end hingedly connected to a respective foot rail and having the opposite end connected to the frame for linear reciprocating movement and for producing an elliptical path."

Appendix S

Witness Octane Proposes to Call

Pursuant to the Court's Scheduling Order, and following Octane's disclosure to Icon on September 10, 2009, of the fact that it proposes calling Steve Lenz as an expert witness as part of the *Markman* process (including a brief description of the substance of Mr. Lenz's proposed testimony), Octane offers the following summary of each opinion Mr. Lenz will offer in sufficient detail to permit a meaningful deposition of Mr. Lenz:

Background

1) Mr. Lenz's technical background, including the fact that he has worked in the fitness equipment industry since 1993, including designing elliptical machines.

2) The basic functionality of elliptical machines, including how they work and how they are designed.

3) The differences between the type of linkage (structure that connects the foot rails to the frame of an elliptical) disclosed in the '710 patent and other types of linkages found in commercially available elliptical machines.

4) The types of issues that an elliptical machine designer faces in designing an elliptical machine, including 1) optimizing the smoothness and feel of the machine, 2) minimizing noise, 3) minimizing the "envelope" in which the machine's linkage operates to decrease the overall size of the machine, 4) minimizing cost of manufacture of the machine, 5) maximize life span of the machine by

minimizing wear, and 6) create a machine with pleasing aesthetics.

Claim Construction

1) ***Regarding Claim 1, element (c)***, that the term "stroke rail" is not common in the field of elliptical machines and, therefore, as one of ordinary skill in the art, he would look to the specification, claim language, file history, and dictionary definitions to determine its meaning. Having undertaken that analysis, a stroke rail should be construed to mean: "A linear or curved bar, which can be made to vary in length, extending from a foot rail to a frame on an elliptical machine." Each excerpt from the intrinsic evidence, listed above, is consistent with this definition. There is nothing in the intrinsic evidence that contradicts this definition.

2) ***Regarding Claim 1, element (d),*** the function recited in this element contains terms that are clear and understandable, not only for those who work in the fitness equipment industry, but also for a lay person. The function simply requires that the first end of the stroke rail move linearly and that such linear displacement result in the second end of the stroke rail moving in a substantially elliptical manner.

3) The structure that is necessary to allow this function to occur is that listed above in Octane's claim construction for this term. All the structure listed by Octane is necessary for the elliptical machine disclosed in the '710 patent to perform the stated function. For

example, without the pin 76, nut 78, flared head 82 and c-shaped channel 84, shown in Figure 1 of the '710 patent, the first end of the stroke rail will not move linearly.

4) Mr. Lenz also intends to review and analyze the proposed claim constructions to be submitted by Icon relevant to this limitation and provide his opinion regarding the propriety of such construction.

5) ***Regarding claim 1, element (e)***, the function recited in this element contains terms that are clear and understandable, not only for those who work in the fitness equipment industry, but also for a lay person. The function simply requires the varying of the size of the elliptical path that the second end of each stroke rail travels.

6) The structure that is necessary to allow this function to occur is that listed above in Octane's claim construction for this term. All the structure listed by Octane is necessary for the elliptical machine disclosed in the '710 patent to perform the stated function. For example, without the pin 76, nut 78, flared head 82 and c-shaped channel 84, shown in Figure 1 of the '710 patent, the second end of the stroke rail will not move in a substantially elliptical path and the elliptical path that the second end of the stroke rail travels will not vary.

7) Mr. Lenz also intends to review and analyze the proposed claim constructions to be submitted by Icon relevant to this limitation and provide his opinion regarding the propriety of such construction.

8) ***Regarding claim 2, element (iii)***, the function recited in this element contains terms that are clear and understandable, not only for those who work in the fitness equipment industry, but also for a lay person. The function simply requires that the crank arm be coupled to a corresponding stroke rail so that the axle can rotate freely.

9) The structure that is necessary to allow this function to occur is that listed above in Octane's claim construction for this term. All the structure listed by Octane is necessary for the elliptical machine disclosed in the '710 patent to perform the stated function.

10) Mr. Lenz also intends to review and analyze the proposed claim constructions to be submitted by Icon relevant to this limitation and provide his opinion regarding the propriety of such construction.

DATED: June 1, 2010

/s/_____

Rudolph A. Telscher, Jr., Esq.
Matthew L. Cutler, Esq.
HARNESS DICKEY AND PIERCE
7700 Bonhomme Avenue, Suite 400
St. Louis, MO 63105

Attorneys for Defendants
Octane Fitness, LLC

Appendix S

See Supplemental Appendix at Page SA-76

WEBSTER DICTIONARY PAGES INCLUDED IN OCTANE FITNESS' SUPPLEMENTAL PROPOSED CLAIM CONSTRUCTIONS

APPENDIX T — ADDENDUM TO EXPERT REPORT OF DR. JOHAN RASTY, PH.D., DATED JULY 1, 2010

Addendum to Expert Report

ICON Health & Fitness, Inc. v. Octane Fitness, LLC

United States District Court for the
District of Minnesota

Case No: 0:09-cv-00319 (ADM/SRN)

A report submitted to:

Workman Nydegger
1000 Eagle Gate Tower
60 East South Temple
Salt Lake City, UT 84111

Prepared by:

/s/_____
Dr. J. Rasty, Ph.D., PE, MBA

Date: July 1, 2010

Summary of Opinions:

I have been asked to provide an addendum to my earlier expert reports to express any opinions I may present to the Court or at trial concerning Octane's interpretation of the term "stroke rail" and concerning Octane's new positions, if any, on invalidity and non-infringement.

Appendix T

My opinion that Octane's Q45 and Q47 devices infringe US Patent No. 6,019,710 ("'710 patent") and that the '710 patent is valid over the prior art cited by Octane has not changed as a result of the parties' proposed interpretations of "stroke rail."

Data and Other Information Considered:

In addition to the materials listed in my earlier reports, I considered the following information in connection with this addendum:

1. Octane's proposed interpretation of "stroke rail."

2. ICON's proposed interpretation of "stroke rail."

3. Portions of Octane's supplemental prior art statement and claim chart.

I may rely upon, or utilize any portions of the above material as exhibits in any future testimony.

Opinion:

I understand that Octane's proposed interpretation for the term "stroke rail" is **"a linear or curved bar, which can be made to vary in length, extending from a foot rail to a frame on an elliptical machine."** It is my opinion that this interpretation is inappropriate, principally because use of the term "bar" may suggest that the stroke rail must be a unitary or "one-piece" component. This certainly is not the case, as the '710 patent discloses stroke rails comprised

of both single or multiple parts. These multi-part stroke rails are shown generally at Figures 5, 6 of the '710 patent and the portions of the specification describing them.

I have also considered ICON's proposed interpretation of "stroke rail" – **"a structure comprised of one or more parts that is attached to a foot rail and connected to the frame."** This construction clarifies and accommodates the disclosure of the '710 patent that the stroke rail may be comprised of one or more parts.

The structures identified in my March 1, 2010 Expert Report (Infringement Report) as a "stroke rail" are the 3P Actuator Links (Q45) and 3P Link Assemblies (Q47). These structures satisfy the definition of "stroke rail" under either Octane's or ICON's proposed interpretations. For purposes of analyzing literal infringement, I will assume that the term "bar" in Octane's proposed interpretation can be a multi-part component.

3P Actuator Link (Q45)–this part (shown at OCTANE 021175, attached to ICON Supplemental Claim Chart) satisfies Octane's proposed interpretation of "stroke rail." The 3P Actuator Link is curved and can be made to vary in length through operation of the actuator motor. The 3P Actuator Link also extends from a foot rail to the fame of Octane's Q45 elliptical machine: At one end, the 3P Actuator Link is attached to the forward end of a foot rail, and as best as I can understand Octane's proposed interpretation, it "extends" to the frame. In fact, the 3P Actuator Link is actually attached to the frame through the crank shaft (Infringement Report p. 7). This part also

satisfies ICON's proposed interpretation of "stroke rail." As already noted, the 3P Actuator Link is a multi-part structure that is attached to the foot rail at its top end and is connected to the frame through the Crank Shaft Connection (Infringement Report p. 7).

3P Link Assembly (Q47)–this part (shown at OCTANE 000339, attached to ICON Supplemental Claim Chart) satisfies Octane's proposed interpretation of "stroke rail." The 3P Link Assembly is curved and can be made to vary in length through operation of the actuator motor. The 3P Link Assembly extends from a foot rail to the frame of Octane's Q47 elliptical machine: At one end, the 3P Link Assembly is attached to the forward end of a foot, and, as best as I can understand Octane's proposed interpretation, it "extends" to the frame.extends to the frame. In fact, the 3P Link Assembly is actually attached to the frame through the crank shaft (Infringement Report p. 7). This part also satisfies ICON's proposed interpretation of "stroke rail." As already noted, the 3P Link Assembly is a multi-part structure that is attached to the foot rail at its top end and is connected to the frame through the Crank Shaft Connection (Infringement Report p. 7).

If it is determined that these structures do not literally satisfy Octane's "stroke rail" interpretation, it is my opinion they are equivalents of the "stroke rail." The function of the stroke rails of the '710 patent is to provide the structure necessary to interconnect the frame and foot rail in a manner that allows the functions of the asserted claim to be accomplished (i.e., so that the foot rail can move in "a substantially elliptical path" which can

be "selectively var[ied]."). For the reasons stated in my Infringement Report, the structures of the 3P Actuator Link and 3P Link Assemblies accomplish this function in substantially the same way to achieve substantially the same result as the stroke rails depicted in the '710 patent (Infringement Report pp. 11–16). Additionally, if it is determined that "stroke rail" must be comprised of a single-part structure, the multi-part 3P Actuator Link and 3P Link Assembly are equivalent to a single-part stroke rail. Specifically, during use of both the Q45 and Q47 devices, the individual components of the 3P Actuator Link and 3P Link Assemblies are rigidly connected to one another. This rigid relationship between the individual parts of the 3P Actuator Link and 3P Link Assemblies enables these structures to act as one part during use of the Octane elliptical devices. The difference between the use of one part of many parts is insubstantial in this context.

APPENDIX U — EXCERPTS FROM DEPOSITION OF TIMOTHY J. PORTH, DATED JANUARY 18, 2010

[1] UNITED STATES DISTRICT COURT
DISTRICT OF MINNESOTA
FOURTH DIVISION

CASE NO. 0:09-CV-00319 (ADM/SRN)

ICON HEALTH & FITNESS, INC.,
A DELAWARE CORPORATION,

Plaintiff,

vs.

OCTANE FITNESS, LLC, A MINNESOTA
LIMITED LIABILITY COMPANY,

Defendant.

CONFIDENTIAL
ATTORNEYS EYES ONLY

Videotaped Deposition of
Timothy J. Porth
January 18, 2010
9:03 A.M.

***

[75] THE WITNESS: I can't speak for what they did. They believe it hasn't infringed but that's—nothing beyond that.

Q. When you say opinions, do you mean Mr. Stearns and Maresh, their own personal opinions or opinions from their attorneys?

A. They, both, their own opinion and an opinion from their attorney.

Q. Do you know who Mr. Stearns and Maresh attorney that provided this opinion, do you know his or her name?

MR. SORIANO: Object to the form of the question, foundation, calls for speculation.

THE WITNESS: I know that Ken uses a couple different attorneys. Nick Nichols is one. I don't know if he was the one that he used on this.

BY MR. VEVERKA:
Q. Did they provided you a written copy of their non-infringement opinion?

MR. SORIANO: Object to the form and the foundation. Misstates testimony.

THE WITNESS: Have they given me a written document on their opinion?

BY MR. VEVERKA:
[76] Q. Yes.

A. I believe they have.

Q. And have you provided that document to your attorney to produce in this case?

A. I gave them everything I had, so if it was in there, I gave it to them.

MR. VEVERKA: We'd ask that that be produced.

MR. SORIANO: We have produced everything that is not privileged and that we haven't waived, so I'm not aware of anything else being responsive.

We'll obviously look and if there is anything that hasn't been produced, we'll do that. But I'm not agreeing to produce anything, because I think our production is current.

BY MR. VEVERKA:
Q. With respect to that opinion that was provided to you by Mr. Stearns and Maresh, do you recall the general substance of that opinion?

MR. SORIANO: Object to the form and the foundation, misstates testimony. Calls for a legal conclusion.

THE WITNESS: Do I remember the –

BY MR. VEVERKA:
[77] Q. The conclusions or the opinion, that is an easier way to put it.

MR. SORIANO: Same objection.

THE WITNESS: I do.

BY MR. VEVERKA:
Q. And what were they?

A. It's the old linear versus arcuate.

Q. Can you elaborate on that for the record? I might understand but I need to have it on the record.

A. Yeah.

MR. SORIANO: I'll object to the form and the foundation, to the extent it violates any information that he learned from his lawyers.

THE WITNESS: Our product travels, there is a linkage which we call rocker arm, travels in an arcuate path and has a pivot and it rotates around that pivot and the '710 patent travels in a linear path in a C channel.

BY MR. VEVERKA:
Q. Okay, and so with respect to this opinion provided by Mr. Stearns and Mr. Maresh, it indicated that Octane's products wouldn't infringe the '710 patent for the reason you just articulated?

MR. SORIANO: Object to the form, the foundation to the extent it misstates testimony.

[78] THE WITNESS: Correct

BY MR. VEVERKA:
Q. Did it provide any other basis for the opinion of non-infringement?

MR. SORIANO: Same objections.

THE WITNESS: I don't recall.

BY MR. VEVERKA:
Q. Was there more than one opinion of non-infringement provided by Mr. Stearns and Mr. Maresh?

MR. SORIANO: Object to the form, the foundation, misstates testimony.

THE WITNESS: I don't recall.

BY MR. VEVERKA:
Q. Do you recall if you still have a copy of that opinion?

MR. SORIANO: Object to form, the foundation, misstates testimony.

THE WITNESS: I do not.

BY MR. VEVERKA:
Q. Do you recall how you received that opinion from Mr. Stearns and Maresh?

MR. SORIANO: Same objections.

THE WITNESS: I do not.

BY MR. VEVERKA:
[79] Q. Did Octane ask Mr. Stearns and Maresh to obtain a non-infringement opinion for the '710 patent?

MR. SORIANO: Same objections.

THE WITNESS: No.

BY MR. VEVERKA:
Q. So, Mr. Stearns and Maresh did that on their own accord.

MR. SORIANO: Same objections.

THE WITNESS: Correct.

BY MR. VEVERKA:
Q. In addition to, let me start over.

Are you aware of any other opinions of non-infringement other than the one provided by Mr. Stearns and Maresh to Octane?

MR. SORIANO: Object to the form, the foundation, misstates testimony, subject to that--

THE WITNESS: Can you restate the question?

BY MR. VEVERKA:
Q. Sure. Other than the opinion of non-infringement provided to Octane by Stearns and Maresh, are you aware of any other non-infringement opinions with respect to Octane's products and the '710 patent?

MR. SORIANO: Object to form, the [80] foundation, misstates the testimony. You can answer.

THE WITNESS: Yes.

BY MR. VEVERKA:
Q. And, what, can you identify those for me?

MR. SORIANO: You can answer to the extent it doesn't violate the attorney-client privilege.

THE WITNESS: Well, we had an opinion done by our attorney and I know the insurance company had an opinion done.

BY MR. VEVERKA:
Q. Okay, when you say you had an opinion done by your attorney, is that the Mr. Segelbaum opinion?

A. No.

Q. Which attorney provided that opinion?

Q. Mike Sherrill.

Q. Did Mr. Segelbaum also provide an opinion of non-infringement with respect to this initial patent search you've testified about earlier?

MR. SORIANO: Object to the form and the foundation.

THE WITNESS: With respect to when we were early on doing the license agreement or since we were sued by ICON?

[81] BY MR. VEVERKA:
Q. When you entered into the license agreement, I believe that was, I believe that was the time that you used Mr. Segelbaum to do what you described as a patent search.

A. Correct.

Q. Did that patent search from Mr. Segelbaum provide any opinion of non-infringement of the '710 patent?

MR. SORIANO: Object to the foundation.

THE WITNESS: You asked if we had an opinion done by Chuck Segalbaum. I said I didn't remember if an official opinion was written up. Is that what you're asking?

BY MR. VEVERKA:
Q. That's part of it.

A. Okay.

Q. So I do recall that I believe you testified earlier that Mr. Segelbaum did a patent search in connection with the license agreement that's Exhibit No. 4, correct?

A. Yes.

Q. And that that patent search revealed the presence or identified the '710 patent, correct?

[82] MR. SORIANO: Object to the form, foundation, misstates testimony.

THE WITNESS: Correct.

BY MR. VEVERKA:
Q. Did Mr. Segelbaum's patent search provide any opinion of non-infringement of the '710 patent?

MR. SORIANO: Object to the form, vague and ambiguous.

THE WITNESS: Yes, it did.

BY MR. VEVERKA:
Q. And was that a written opinion?

A. I believe it was not.

Q. It was an oral opinion?

A. Yes.

Q. Did Mr. Segelbaum provide any opinions of non-infringement with respect to other patents disclosed by his patent search?

MR. SORIANO: Objection, foundation.

THE WITNESS: Did he provide written opinions on other ones?

BY MR. VEVERKA:
Q. I'm sorry. Did he provide any opinion with respect to other patents that were disclosed pursuant to his patent search?

A. Yes.

[83] Q. Do you have any idea how many patents were the subject of his patent search and non-infringement opinion?

MR. SORIANO: Object to the form, foundation, misstates testimony.

THE WITNESS: Everything with elliptical, anything covering an elliptical machine, I couldn't tell you the number.

BY MR. VEVERKA:
Q. I might have asked you this before, and if I did, I apologize. Do you still have that patent search from Mr. Segelbaum?

A. I don't know if I have all that information.

Everything I had, I submitted to our attorneys.

Q. If anybody had it, you would.

MR. SORIANO: Object to the form, the foundation, misstates his testimony.

THE WITNESS: Other people could have had it in our company as well.

BY MR. VEVERKA:
Q. Okay, we, just so I have it straight, we have an initial opinion of non-fringement by Mr. Segelbaum, correct, of the '710 patent?

MR. SORIANO: Object to the form, foundation, it's vague and ambiguous, misstates [84] testimony.

THE WITNESS: Yes.

BY MR. VEVERKA:
Q. And then there was a second opinion of non-infringement of the '710 patent from Mr. Sherrill, correct?

A. Correct.

Q. And do you remember the approximate time frame of Mr. Sherill's opinion?

A. After we were served. Yes.

Q. When you say served, you mean sued by ICON in this case?

A. Well, we got a letter. I don't know the exact timing. We got a letter from ICON. I don't know if that's called

putting us on notice, and then at a later date when we didn't roll over to a huge royalty, we get sued, so, somewhere in that time span.

Q. In addition to Mr. Segalbaum's opinion and Mr. Sherrill's opinion, has Octane obtained any other opinions of non-infringement of the '710 patent?

MR. SORIANO: Object to the form, foundation, asked and answered.

THE WITNESS: When we say opinion, is [85] that written opinion, verbal opinion? Ask the question again.

BY MR. VEVERKA:
Q. Let me start with either.

MR. SORIANO: Compound, objection, compound.

THE WITNESS: We have reviews done with every new product. I can't specifically say if the '710 was in there, but that is common practice for Octane.

BY MR. VEVERKA:
Q. Let me break it down then. Are there any written opinions of non-infringment of the '710 patent by Octane's product other than Mr. Segelbaum's or Mr. Sherrill's written opinions?

MR. SORIANO: Object to the form, the foundation. It misstates the testimony, assumes facts not in evidence.

THE WITNESS: The insurance company did an opinion as well.

BY MR. VEVERKA:
Q. Do you know who conducted the, who provided the opinion to your insurance company?

A. I don't remember the name.

Q. Do you have a copy of that opinion?

[86] A. I may. It would be in my files if I did.

Q. And if you did, you would have provided it to your attorneys, correct?

A. Correct.

Q. Do you recall the substance of the non-fringement opinion done for your insurance company?

A. I do not.

Q. Is it your understanding that it was a non-infringement opinion though?

MR. SORIANO: Object to the form, the foundation, to the extent that his answer would waive the attorney-client privilege, Octane has not waived in this case and has chosen not to produce the non-infringement opinion, which is its right to do.

So, if you have knowledge that didn't come from lawyers, you an answer that question.

THE WITNESS: They wouldn't be paying if they thought we infringed, so that is an opinion of non-infringement.

BY MR. VEVERKA:
Q. I'm sorry, what do you mean, they wouldn't be paying?

A. The insurance company.

[87] Q. What do you mean, the insurance company wouldn't be paying? Paying for your defense in this case, is that what you mean?

A. Correct.

Q. We've been discussing the existence of multiple non-infringement opinions. Have you received an opinion that the '710 patent is not valid?

MR. SORIANO: Object to the form, the foundation, to the extent it calls for a legal conclusion.

THE WITNESS: Have I received a written opinion that the '710 is not valid?

BY MR. VEVERKA:
Q. Let's start with written opinion, yes.

A. No. I have not.

Q. Have you received an oral opinion that the '710 patent is not valid?

MR. SORIANO: Object to the form, and the foundation, to the extent it calls for a legal conclusion, also to the extent it would violate the attorney-client privilege in this case.

THE WITNESS: Yeah, I don't know if I—

MR. SORIANO: If you only can speak to that based on information garnered from [88] conversation with your lawyers, I would instruct you not to answer the question.

THE WITNESS: Okay, I'm not going to answer the question.

BY MR. VEVERKA:
Q. Okay, well let me ask it this way. Is it Octane's position that the '710 patent is not valid?

MR. SORIANO: Object to the form, the foundation, to the extent it calls for a legal conclusion and ICON is fully aware of Octane's positions in this case with regard to validity. Answer if you know.

THE WITNESS: Same answer.

MR. SORIANO: If you only know through counsel.

THE WITNESS: I only know through counsel.

Appendix U

BY MR. VEVERKA:

Q. So you can't answer that question because you believe it would be covered by the attorney-client privilege?

MR. SORIANO: Let me talk to my client for a minute.

MR. VEVERKA: Okay.

****

APPENDIX V — OCTANE'S SUPPLEMENTAL PRIOR ART STATEMENT, DATED MARCH 1, 2010

IN THE UNITED STATES DISTRICT COURT
FOR THE DISTRICT OF MINNESOTA
FOURTH DIVISION

Case No.: 0:09-cv-00319 (ADM/SRN)

ICON HEALTH & FITNESS, INC.,
a Delaware corporation,

Plaintiff,

vs.

OCTANE FITNESS, LLC,
a Minnesota limited liability company,

Defendant.

DEFENDANT OCTANE FITNESS' SUPPLEMENTAL PRIOR ART STATEMENT

Pursuant to the Court's amended Pretrial Scheduling Order, and in light of Icon's Supplemental Claim Chart filed on October 23,2009, Octane Fitness, LLC ("Octane") hereby submits its supplemental statement of prior art on which it relies and a detailed explanation of what it alleges the prior art shows and how that prior art invalidates the claims asserted by plaintiffs.

Appendix V

Accordingly, Octane states that all of the prior art cited in the prosecution history of U.S. Patent No. 6,019,710 ("the '710 patent") demonstrates the state of the art in elliptical machines at the time of the filing of the application that matured into the '710 patent. In addition, the asserted claims of Icon's '710 patent are invalid in view of U.S. Patent Nos. 5,895,339 ("the '339 patent"), 5,957,814 ("the '814 patent"), 5,788,610 ("the '610 patent"), 5,707,321 ("the '321 patent"), 5,549,526 ("the '526 patent"), 5,562,574 ("the '574 patent"), 5,540,637 ("the '637 patent"), and 5,573,480 ("the '480 patent"), as explained in more detail herein and the attached Expert Report of Steven Lenz. In the chart below, Octane sets forth each of the limitations from the claims that have been asserted to date by Icon - claims 1-5, 7, 9-11 ("the Asserted Claims") and the manner in which the '339, '814, and '610 patents disclose each such reference. Further, Octane incorporates herein by reference, in its entirety, the Expert Report of Steven Lenz, which is attached hereto. The Expert Report of Steven Lenz provides further detail regarding the various ways in which the '710 patent is invalid as anticipated, invalid as obvious, and/or invalid as indefinite.

None of the Asserted Claims, as properly construed, is infringed by any Octane product. If the Court erroneously adopts the overly broad claim constructions urged by Icon in this case, however, then the claims will be broad enough to encompass several prior art references, including the '339, '814, '321, and '610 patents. As such, nothing in this claim chart should be taken as an admission or waiver regarding what is the proper scope of the Asserted Claims; rather, this Prior Art Statement explicitly presumes

that the Court erroneously adopts the broad claim constructions asserted by Icon.

Octane further states that it reserves its right to amend this Prior Art Statement after the Court issues its claim construction Order.

Claim 1

Claim Limitation	5,895,339	5,957,814
Frame	Frame 510, col. 4, ll. 20-29; Figures 2-4.	Frame member 70, col. 5, ll. 31-36; Figures 1-2.
Foot rails	Foot supporting links 550, col. 4, ll. 62-63; Figures 2-4.	Foot support member 20 and 22, col. 5, ll. 1-2; Figures 1-2.
Stroke rails	First links 530, col. 2, ll. 60-61; Figures 2-4.	Orbital/coupler links 14/30/10/47 and orbital/coupler links 16/32/12/49, col. 5, ll. 4-6 and 16-20; Figures 1-2.
Means for connecting each stroke rail to the frame such that linear reciprocating displacement of the first end of each stroke rail results in displacement of the	**Axle**: common shaft (A1), col. 4, ll. 65-67; Figures 2-4. **Crank arms**: cranks 520, col. 4, ll. 64-66; Figures 2-4.	**Axle**: crankshaft journal 55 (not shown), col. 5, ll. 8-11; Figures 1-2. **Crank arms**: cranks 54 and 56, col. 5, ll. 8-11; Figures 1-2. **Pins**: pivots 43 and 46, col. 5, ll. 7-8; Figures 1-2.

second end of each stroke rail in a substantially elliptical path [**An axle mounted to a pair of crank arms, a pin projecting from each crank arm, and a collar encircling each pin. The axle is mounted to the frame and each collar is attached to a stroke rail.**]	**Pins**: A2, col. 5, ll. 1-5; Figures 2-4. **Collar**: apertures that receive the pins, col. 5, ll. 1-5; Figures 2-4. **Axle mounted to frame**: A1, col. 5, ll. 64-66; Figures 2-4. **Collar attached to a stroke rail**: col. 3, ll. 1-5; Figures 2-4.	**Collar**: apertures that receive pins **Axle mounted to frame**: col. 5, ll. 8-11; Figures 1-2. **Collar attached to a stroke rail**: col. 5, ll. 7-8; Figures 1-2.
Means for selectively varying the size of the substantially elliptical path that the second end of each stroke rail travels [(1) **an arm with holes along a**	**An electric motor driving a gear that engages teeth on a bar**: electric motor 577, col. 4, ll. 30-36; Figure 3. **to move an adjustment arm**: adjustment arm 575, col. 4, ll. 30-36.	**An electric motor driving a gear that engages teeth on a bar**: actuator 9, col. 6, ll. 3-8; Figure 3.

portion of its length that can be aligned with a pin and a hole in a stroke rail; or (2) an electric motor driving a gear that engages teeth on a bar to move an adjustment arm.]	**An electric motor driving a gear that engages teeth on a bar to move an adjustment arm:** electric motor 690, col. 7, ll. 9-20; Figure 5. **Arm with holes** 517, col. 4, ll. 37-46; Figure 4. **Pin** 519, col. 4, ll. 40-44; Figure 4.	**to move an adjustment arm:** col. 6, ll. 3-8 (unmarked adjustment arm extending from actuator 9); Figure 3.

Claim 2

Claim Limitation	5,895,339	5,957,814
Means for connecting each crank arm to a corresponding stroke rail so as to enable free rotation of the axle. **[A pair of collars, each encircling**	**Crank arms:** cranks 520, col. 4, ll. 64-66; Figure 2. **Pins:** A2, col. 5, ll. 1-5; Figure 2.	**Crank arms:** cranks 54 and 56, col. 5, ll. 8-11; Figures 1-2. **Pins:** pivots 43 and 46, col. 5, ll. 7-8; Figures 1-2.

a pin. Each pin projects from a crank arm and each collar is attached to a stroke rail]	**Collar**: apertures that receive the pins, col. 5, ll. 1-5; Figure 2. **Collar attached to a stroke rail**: col. 3, ll. 1-5; Figure 2.	**Collar**: apertures that receive the pins; Figures 1-2. **Collar attached to a stroke rail**: col. 5, ll. 7-8; Figures 1-2.

Claim 3		
Claim Limitation	**5,895,339**	**5,957,814**
(i) a pin projecting from each crank arm; and (ii) a tubular sleeve rotatably disposed over each pin, each tubular sleeve being rigidly secured to a corresponding stroke rail.	**Crank arms**: cranks 520, col. 4, ll. 64-66; Figure 2. **Pins**: A2, col. 5, ll. 1-5; Figure 2. **Collar**: apertures that receive the pins, col. 5, ll. 1-5; Figure 2. **Collar attached to a stroke rail**: col. 3, ll. 1-5; Figure 2.	**Crank arms**: cranks 54 and 56, col. 5, ll. 8-11; Figures 1-2. **Pins**: pivots 43 and 46, col. 5, ll. 7-8; Figures 1-2. **Collar**: apertures that receive the pins; Figures 1-2. **Collar attached to a stroke rail**: col. 5, ll. 7-8; Figures 1-2.

Claim 4

Claim Limitation	5,895,339	5,957,814
means for conserving momentum generated by rotation of the axle.	**Flywheel with grooved annular edge:** pulley 524, col. 5, ll. 63-66; Figure 2. **Weighted wheel rotatably attached to frame:** flywheel 527, col. 5, l. 67 to col. 6, l. 3; Figure 2. **Drive wheel:** pulley 526, col. 5, l. 67 to col. 6, l. 3; Figure 2. **Belt:** belt 525, col. 5, l. 67 to col. 6, l. 3; Figure 2.	**Flywheel with grooved annular edge:** sprocket 35, col. 5, ll. 37-52; Figure 1. **Weighted wheel rotatably attached to frame:** flywheel 79, col. 5, ll. 37-52; Figure 1. **Drive wheel:** sprocket 80, col. 5, ll. 37-52 **Belt:** belt 82, col. 5, ll. 37-52; Figure 1. The '814 patent discloses a two-stage gear reduction. The middle sprocket, 33, is included only to increase the crank speed to obtain the optimum

Appendix V

		revolutions per minute for operating the alternator. One of ordinary skill in the art would know that this second stage is not necessary and could design and build a machine without that gear reduction. In the alternative, it would have been obvious for one of skill in the art to use the flywheel arrangement disclosed in the '610 patent, at col. 6, ll. 36-42 and Figure 1 with the elliptical machine disclosed in the '814 patent or the flywheel, pulley, and belt arrangement disclosed in the '339 patent.

Claim 5

Claim Limitation	5,895,339	5,957,814
(a) a flywheel mounted to the axis; (b) a weighted wheel rotatably mounted to the frame; and (c) a belt extending from the flywheel to the weighted wheel.	**Flywheel with grooved annular edge:** pulley 524, col. 5, ll. 63-66; Figure 2. **Weighted wheel rotatably attached to frame:** flywheel 527, col. 5, l. 67 to col. 6, l. 3; Figure 2. **Drive wheel:** pulley 526, col. 5, 1.67 to col. 6, l. 3; Figure 2. **Belt:** belt 525, col. 5, l. 67 to col. 6, l. 3; Figure 2.	**Flywheel with grooved annular edge:** sprocket 35, col. 5, ll. 37-52; Figure 1. **Weighted wheel rotatably attached to frame:** flywheel 79, col. 5, ll. 37-52; Figure 1. **Drive wheel:** sprocket 80, col. 5,ll. 37-52 **Belt:** belt 82, col. 5, ll. 37-52; Figure 1. The '814 patent discloses a two-stage gear reduction. The middle sprocket, 33, is included only to increase the crank speed to obtain the optimum revolutions per minute for operating the alternator. One of ordinary skill in the art would know that this second stage is not necessary and could design and build a machine without that gear reduction.

		In the alternative, it would have been obvious for one of skill in the art to use the flywheel arrangement disclosed in the '610 patent, at col. 6, ll. 36-42 and Figure 1 with the elliptical machine disclosed in the '814 patent or the flywheel, pulley, and belt arrangement disclosed in the '339 patent.

Claim 7

Claim Limitation	5,895,339	5,957,814
the frame comprises a pair of spaced apart tracks and a support stand upstanding therebetween.	Col. 4, ll. 3-6. " ... the rocker links 460 could be replaced by rollers mounted on the forward ends of the foot supporting links 450 and in rolling contact with a ramp or tracks mounted on the frame."	Tracks 56-59, col. 5, ll. 27-30; Figures 1-2. Upright support 83, col. 5, ll. 34-36; Figures 1-2.

Claim 9

Claim Limitation	5,895,339	5,957,814
each stroke rail is curved	Col. 8, ll. 64-66. " ... the configuration of the link interconnected between the crank, the rear rocker link, and the foot supporting link could be nonlinear or curved ..."	Orbital/coupler links 14/30/10/47 and orbital/coupler links 16/32/12/49, col. 5, ll. 4-6 and 16-20; Figures 1-2.

Claim 10

Claim Limitation	5,895,339	5,957,814
each foot rail is curved	Foot supporting links 550, col. 4, ll. 60-64; Figures 2-4.	Foot support members 20 and 22, col. 5, ll. 1-2.

Claim 11

Claim Limitation	5,895,339	5,957,814
a wheel mounted on each foot rail and disposed on the frame	Col. 4, ll. 3-6. "... the rocker links 460 could be replaced by rollers mounted on the forward ends of the foot supporting links 450 and in rolling contact with a ramp or tracks mounted on the frame."	Rollers 40, 41, 42, 61 col. 5, ll. 27-30; Figure 2.

Appendix V

DATED: June 1, 2010

By: /s/_____
Rudolph A. Telscher, Jr., Esq.
Matthew L. Cutler, Esq.
HARNESS DICKEY AND PIERCE
7700 Bonhomme Avenue, Suite 400
St. Louis, MO 63105

Attorneys for Defendants
Octane Fitness, LLC

Appendix V

IN THE UNITED STATES DISTRICT COURT
FOR THE DISTRICT OF MINNESOTA
FOURTH DIVISION

Case No.: 0:09-cv-00319 (ADM/SRN)

ICON HEALTH & FITNESS, INC.,
a Delaware corporation,

Plaintiff,

vs.

OCTANE FITNESS, LLC,
a Minnesota limited liability company,

Defendant.

EXPERT REPORT OF STEVEN M. LENZ

I. Qualifications and Background

1. My name is Steven M. Lenz. I currently reside in Naperville, IL and am self-employed as a consultant to the fitness equipment industry. I am a professional engineer and have a degree in Engineering (Power and Machinery) from North Dakota State University, which I earned in 1977.

2. Counsel for defendant, Octane Fitness, LLC, has retained me as an expert witness in the lawsuit between Octane and Icon Health & Fitness. I have been asked to

provide opinions regarding elliptical exercise machines and the technology disclosed in U.S. Patent No. 6,019,710, which I will refer to in this Expert Report as "the '710 patent." A complete statement of all my opinions, including the basis and reasons for those opinions, is contained later in this report. I am to be compensated $250 per hour for my work in serving as an expert in this case.

3. Exhibit 1, attached to this Expert Report, contains my curriculum vitae. That curriculum vitae sets forth my employment history, professional positions that I have held, honors and awards I have received, and professional offices and activities. I have not previously been retained as an expert witness in any matter. Attached as Exhibit 2 is a list of documents that I reviewed in preparation of this opinion.

4. Since 1993, I have worked in the fitness equipment industry, including in roles of Project Manager, Director of Mechanical Engineering, Vice President – Engineering, and my current occupation as a consultant to the fitness equipment industry. Among my various duties in those roles, I have worked on the design and manufacture of elliptical exercise equipment for at least five years.

II. Summary of Opinions

5. This Expert Report is based on my personal knowledge and belief and, if called to testify as a witness, I would and could competently testify regarding the information contained in this report.

6. Having completed the analysis that was requested of me, I have come to the opinion that, using the claim construction positions adopted by Icon in this litigation, claims 1-5, 7, and 9-11 of the '710 patent are invalid in view of (a) U.S. Patent No. 5,898,339 ("the '339 patent") to Maresh, (b) U.S. Patent No. 5,957,814 ("the '814 patent") to Eschenbach, (c) U.S. Patent No. 5,707,321 ("the '321 patent") to Maresh, and (d) U.S. Patent No. 5,788,610 ("the '610 patent") to Eschenbach. Further, claims 1-5, 7, and 9-11 are invalid as indefinite in that they do not contain all the structure necessary to perform the recited function. In fact, the recited function cannot be accomplished with the structure Icon proposes is corresponding to that function.

III. General Overview

7. The '710 patent, with issue date of February 1, 2000, discloses a specific type of elliptical exercise machine that, generally speaking, has a "stroke rail" that has one end reciprocating back and forth linearly and the opposite end traveling elliptically. *See, e.g.*, the '710 patent, at col. 4, lines 3-37.

8. I have reviewed and studied the claim construction positions submitted by both Octane and Icon in this case. It is my understanding that, as of the date of this Expert Report, the Court has not yet issued a ruling setting forth what will be the claim constructions that apply during this case. When the Court does issue such a ruling, I reserve the right to modify the opinions contained in this Expert Report.

9. Although outside the scope of this Expert Report, it is my opinion is that the claim construction positions taken by Octane are correct, based on all the evidence of record, including especially the intrinsic evidence of the '710 patent. For purposes of this particular Expert Report, however, I will analyze the validity of the contested claims of the '710 patent based on the claim construction positions set forth by Icon. Icon's claim construction position is attached as Exhibit 3 to this Expert Report.

10. It is my opinion that Icon has impermissibly sought to broaden the scope of its claims in an improper attempt to have those claims cover certain of Octane's elliptical machines. If the claims are ultimately deemed by the Court to be as broad as Icon contends, then those claims will read on the prior art discussed in this Expert Report. As a result, the claims are invalid.

11. I also note that there are numerous patents that pre-date the '710 patent that disclose adjusting the stride of an elliptical machine. To the extent Icon may suggest in this litigation that adjustable stride is a feature unique to the '710 patent, that position would contradicted by numerous prior art patents, including several prior art patents that are cited on the face of the '710 patent.

12. Like many patents that came before and after the '710 patent, that patent describes and claims a specific type of mechanism to generate an elliptical path to be traveled by a user's foot. Specifically, the '710 patent discloses a stroke rail that moves in a linear fashion at one end, has a crank arm connected to the middle portion,

and, thus, travels in an elliptical path at the opposite end. Further, because the claims of the '710 patent are written in a means-plus-function format, it is this specific type of mechanism that claimed in the '710 patent.

IV. The Claim Construction Positions Taken by Icon

13. As referenced above, in several key respects, Icon has tried to advance overly broad claim constructions for the contested claims in this litigation. For the claim term "Means for connecting each stroke rail to the frame such that linear reciprocating displacement of the first end of each stroke rail results in displacement of the second end of each stroke rail in a substantially elliptical path," Icon contends that the scope of that claim limitation is:

A. An axle mounted to a pair of crank arms,

B. A pin projecting from each crank arm,

C. A collar encircling each pin,

D. The axle is mounted to the frame, and

E. Each collar is attached to the stroke rail.

14. For the term "Means for selectively varying the size of the substantially elliptical path that the second end of each stroke rail travels," Icon contends that the scope of that claim limitation is either:

Appendix V

A. An arm with holes along a portion of its length that can be aligned with a pin and a hole in a stroke rail, or

B. An electric motor driving a gear that engages teeth on a bar to move an adjustment arm.

V. The Contested Claims of the '710 Patent (Claims 1-5, 7, and 9-11) are All Invalid Under 35 U.S.C. § 102 in View of the '339 Patent

15. It is my understanding that, for a prior art reference to "anticipate" a patent claim under Section 102 of the Patent Act, every limitation of the claim must be present (explicitly or implicitly) in the prior art reference.

16. It is my opinion that the '339 patent discloses each and every limitation of the contested claims of the '710 patent. As a result, it is my opinion that each claim of the '710 patent is anticipated by the '339 patent, invalidating each claim, as described in more detail below.

17. All of the elements of claim 1 of the '710 patent are found in the '339 patent. I have included the below chart which shows where, specifically, within the '339 patent each element of claim 1 is located:

Claim Limitation	5,895,339
Frame	Frame 510, col. 4, ll. 20-29; Figures 2-4.
Foot rails	Foot supporting links 550, col. 4, ll. 62-63; Figures 2-4.

Appendix V

Stroke rails	First links 530, col. 2, ll. 60-61; Figures 2-4.
Means for connecting each stroke rail to the frame such that linear reciprocating displacement of the first end of each stroke rail results in displacement of the second end of each stroke rail in a substantially elliptical path [**An axle mounted to a pair of crank arms, a pin projecting from each crank arm, and a collar encircling each pin. The axle is mounted to the frame and each collar is attached to a stroke rail.**]	**Axle**: common shaft (A1), col. 4, ll. 65-67; Figures 2-4. **Crank arms**: cranks 520, col. 4, ll. 64-66; Figures 2-4. **Pins**: A2, col. 5, ll. 1-5; Figures 2-4. **Collar**: apertures that receive the pins, col. 5, ll. 1-5; Figures 2-4. **Axle mounted to frame**: A1, col. 5, ll. 64-66; Figures 2-4. **Collar attached to a stroke rail**: col. 3, ll. 1-5; Figures 2-4.
Means for selectively varying the size of the substantially elliptical path that the second end of each stroke rail travels [**(1) an arm with holes along a portion of its length that can be aligned with a pin and**	**An electric motor driving a gear that engages teeth on a bar**: electric motor 577, col. 4, ll. 30-36; Figure 3. **to move an adjustment arm**: adjustment arm 575, col. 4, ll. 30-36.

a hole in a stroke rail; or (2) an electric motor driving a gear that engages teeth on a bar to move an adjustment arm.]	**An electric motor driving a gear that engages teeth on a bar to move an adjustment arm**: electric motor 690, col. 7, ll. 9-20; Figure 5. **Arm with holes** 517, col. 4, ll. 37-46; Figure 4. **Pin** 519, col. 4, ll. 40-44; Figure 4.

18. All of the elements of claim 2 of the '710 patent are found in the '339 patent. I have included the below chart which shows where, specifically, within the '339 patent each element of claim 2 is located:

Claim Limitation	5,895,339
Means for connecting each crank arm to a corresponding stroke rail so as to enable free rotation of the axle. **[A pair of collars, each encircling a pin. Each pin projects from a crank arm and each collar is attached to a stroke rail]**	**Crank arms**: cranks 520, col. 4, ll. 64-66; Figure 2. **Pins**: A2, col. 5, ll. 1-5; Figure 2. **Collar**: apertures that receive the pins, col. 5, ll. 1-5; Figure 2. **Collar attached to a stroke rail**: col. 3, ll. 1-5; Figure 2.

Appendix V

19. All of the elements of claim 3 of the '710 patent are found in the '339 patent. I have included the below chart which shows where, specifically, within the '339 patent each element of claim 3 is located:

Claim Limitation	5,895,339
(i) a pin projecting from each crank arm; and (ii) a tubular sleeve rotatably disposed over each pin, each tubular sleeve being rigidly secured to a corresponding stroke rail.	**Crank arms**: cranks 520, col. 4, ll. 64-66; Figure 2. **Pins**: A2, col. 5, ll. 1-5; Figure 2. **Collar**: apertures that receive the pins, col. 5, ll. 1-5; Figure 2. **Collar attached to a stroke rail**: col. 3, ll. 1-5; Figure 2.

20. All of the elements of claim 4 of the '710 patent are found in the '339 patent. I have included the below chart which shows where, specifically, within the '339 patent each element of claim 4 is located:

Claim Limitation	5,895,339
means for conserving momentum generated by rotation of the axle.	**Flywheel with grooved annular edge**: pulley 524, col. 5, ll. 63-66; Figure 2. **Weighted wheel rotatably attached to frame**: flywheel 527, col. 5, l. 67 to col. 6, l. 3; Figure 2.

	Drive wheel: pulley 526, col. 5, l. 67 to col. 6, l. 3; Figure 2. **Belt:** belt 525, col. 5, l. 67 to col. 6, 1. 3; Figure 2.

21. All of the elements of claim 5 of the '710 patent are found in the '339 patent. I have included the below chart which shows where, specifically, within the '339 patent each element of claim 5 is located:

Claim Limitation	5,895,339
(a) a flywheel mounted to the axis; (b) a weighted wheel rotatably mounted to the frame; and (c) a belt extending from the flywheel to the weighted wheel.	**Flywheel with grooved annular edge:** pulley 524, col. 5, ll. 63-66; Figure 2. **Weighted wheel rotatably attached to frame:** flywheel 527, col. 5, l. 67 to col. 6, l. 3; Figure 2. **Drive wheel:** pulley 526, col. 5, l. 67 to col. 6, l. 3; Figure 2. **Belt:** belt 525, col. 5, l. 67 to col. 6, l. 3; Figure 2.

22. All of the elements of claim 7 of the '710 patent are found in the '339 patent. I have included the below chart which shows where, specifically, within the '339 patent each element of claim 7 is located:

Appendix V

Claim Limitation	5,895,339
the frame comprises a pair of spaced apart tracks and a support stand upstanding therebetween.	Col. 4, ll. 3-6. "... the rocker links 460 could be replaced by rollers mounted on the forward ends of the foot supporting links 450 and in rolling contact with a ramp or tracks mounted on the frame."

23. All of the elements of claim 9 of the '710 patent are found in the '339 patent. I have included the below chart which shows where, specifically, within the '339 patent each element of claim 9 is located:

Claim Limitation	5,895,339
each stroke rail is curved	Col. 8, ll. 64-66. " ... the configuration of the link interconnected between the crank, the rear rocker link, and the foot supporting link could be nonlinear or curved ..."

24. All of the elements of claim 10 of the '710 patent are found in the '339 patent. I have included the below chart which shows where, specifically, within the '339 patent each element of claim 10 is located:

Claim Limitation	5,895,339
each foot rail is curved	Foot supporting links 550, col. 4, ll. 60-64; Figures 2-4.

25. All of the elements of claim 11 of the '710 patent are found in the '339 patent. I have included the below chart which shows where, specifically, within the '339 patent each element of claim 11 is located:

Claim Limitation	5,895,339
a wheel mounted on each foot rail and disposed on the frame	Col. 4, ll. 3-6. "... the rocker links 460 could be replaced by rollers mounted on the forward ends of the foot supporting links 450 and in rolling contact with a ramp or tracks mounted on the frame."

VI. The Contested Claims of the '710 Patent (Claims 1-5, 7, and 9-11) are All Invalid Under 35 U.S.C. § 102 in View of the '814 Patent

26. It is my opinion that the '814 patent discloses each and every limitation of the contested claims of the '710 patent. As a result, it is my opinion that each claim of the '710 patent is anticipated by the '814 patent, invalidating each claim, as described in more detail below.

27. All of the elements of claim 1 of the '710 patent are found in the '814 patent. I have included the below chart which shows where, specifically, within the '814 patent each element of claim 1 is located:

Appendix V

Claim Limitation	5,957,814
Frame	Frame member 70, col. 5, ll. 31-36; Figures 1-2.
Foot rails	Foot support member 20 and 22, col. 5, ll. 1-2; Figures 1-2.
Stroke rails	Orbital/coupler links 14/30/10/47 and orbital/coupler links 16/32/12/49, col. 5, ll. 4-6 and 16-20; Figures 1-2.
Means for connecting each stroke rail to the frame such that linear reciprocating displacement of the first end of each stroke rail results in displacement of the second end of each stroke rail in a substantially elliptical path **[An axle mounted to a pair of crank arms, a pin projecting from each crank arm, and a collar encircling each pin. The axle is mounted to the frame and each collar is attached to a stroke rail.]**	**Axle**: crankshaft journal 55 (not shown), col. 5, ll. 8-11; Figures 1-2. **Crank arms**: cranks 54 and 56, col. 5, ll. 8-11; Figures 1-2. **Pins**: pivots 43 and 46, col. 5, ll. 7-8; Figures 1-2. **Collar**: apertures that receive pins **Axle mounted to frame**: col. 5, ll. 8-11; Figures 1-2. **Collar attached to a stroke rail**: col. 5, ll. 7-8; Figures 1-2.

Means for selectively varying the size of the substantially elliptical path that the second end of each stroke rail travels [(1) **an arm with holes along a portion of its length that can be aligned with a pin and a hole in a stroke rail; or (2) an electric motor driving a gear that engages teeth on a bar to move an adjustment arm.**]	**An electric motor driving a gear that engages teeth on a bar**: actuator 9, col. 6, ll. 3-8; Figure 3. **to move an adjustment arm**: col. 6, ll. 3-8 (unmarked adjustment arm extending from actuator 9); Figure 3.

28. All of the elements of claim 2 of the '710 patent are found in the '814 patent. I have included the below chart which shows where, specifically, within the '814 patent each element of claim 2 is located:

Claim Limitation	5,957,814
Means for connecting each crank arm to a corresponding stroke rail so as to enable free rotation of the axle. [**A pair of collars, each encircling a pin. Each pin projects from a crank arm and each collar is attached to a stroke rail**]	**Crank arms**: cranks 54 and 56, col. 5, ll. 8-11; Figures 1-2. **Pins**: pivots 43 and 46, col. 5, ll. 7-8; Figures 1-2. **Collar**: apertures that receive the pins; Figures 1-2. **Collar attached to a stroke rail**: col. 5, ll. 7-8; Figures 1-2.

Appendix V

29. All of the elements of claim 3 of the '710 patent are found in the '814 patent. I have included the below chart which shows where, specifically, within the '814 patent each element of claim 3 is located:

Claim Limitation	5,957,814
(i) a pin projecting from each crank arm; and (ii) a tubular sleeve rotatably disposed over each pin, each tubular sleeve being rigidly secured to a corresponding stroke rail.	**Crank arms**: cranks 54 and 56, col. 5, ll. 8-11; Figures 1-2. **Pins**: pivots 43 and 46, col. 5, ll. 7-8; Figures 1-2. **Collar**: apertures that receive the pins; Figures 1-2. **Collar attached to a stroke rail**: col. 5, ll. 7-8; Figures 1-2.

30. All of the elements of claim 4 of the '710 patent are found in the '814 patent. I have included the below chart which shows where, specifically, within the '814 patent each element of claim 4 is located:

Claim Limitation	5,957,814
means for conserving momentum generated by rotation of the axle.	**Flywheel with grooved annular edge**: sprocket 35, col. 5, ll. 37-52; Figure 1. **Weighted wheel rotatably attached to frame**: flywheel 79, col. 5, ll. 37-52; Figure 1.

Appendix V

	Drive wheel: sprocket 80, col. 5, ll. 37-52 **Belt:** belt 82, col. 5, ll. 37-52; Figure 1. The '814 patent discloses a two-stage gear reduction. The middle sprocket, 33, is included only to increase the crank speed to obtain the optimum revolutions per minute for operating the alternator. One of ordinary skill in the art would know that this second stage is not necessary and could design and build a machine without that gear reduction.

31. All of the elements of claim 5 of the '710 patent are found in the '814 patent. I have included the below chart which shows where, specifically, within the '814 patent each element of claim 5 is located:

Appendix V

Claim Limitation	5,957,814
(a) a flywheel mounted to the axis; (b) a weighted wheel rotatably mounted to the frame; and (c) a belt extending from the flywheel to the weighted wheel.	**Flywheel with grooved annular edge:** sprocket 35, col. 5, ll. 37-52; Figure 1. **Weighted wheel rotatably attached to frame:** flywheel 79, col. 5, ll. 37-52; Figure 1. **Drive wheel:** sprocket 80, col. 5, ll. 37-52 **Belt:** belt 82, col. 5, ll. 37-52; Figure 1. The '814 patent discloses a two-stage gear reduction. The middle sprocket, 33, is included only to increase the crank speed to obtain the optimum revolutions per minute for operating the alternator. One of ordinary skill in the art would know that this second stage is not necessary and could design and build a machine without that gear reduction.

Appendix V

32. All of the elements of claim 7 of the '710 patent are found in the '814 patent. I have included the below chart which shows where, specifically, within the '814 patent each element of claim 7 is located:

Claim Limitation	5,957,814
the frame comprises a pair of spaced apart tracks and a support stand upstanding therebetween.	Tracks 56-59, col. 5, ll. 27-30; Figures 1-2. Upright support 83, col. 5, ll. 34-36; Figures 1-2.

33. All of the elements of claim 9 of the '710 patent are found in the '814 patent. I have included the below chart which shows where, specifically, within the '814 patent each element of claim 9 is located:

Claim Limitation	5,957,814
each stroke rail is curved	Orbital/coupler links 14/30/10/47 and orbital/coupler links 16/32/12/49, col. 5, ll. 4-6 and 16-20; Figures 1-2.

34. All of the elements of claim 10 of the '710 patent are found in the '814 patent. I have included the below chart which shows where, specifically, within the '814 patent each element of claim 10 is located:

Claim Limitation	5,957,814
each foot rail is curved	Foot support members 20 and 22, col. 5, ll. 1-2.; Figures 1 and 3.

35. All of the elements of claim 11 of the '710 patent are found in the '814 patent. I have included the below chart which shows where, specifically, within the '814 patent each element of claim 11 is located:

Claim Limitation	5,957,814
a wheel mounted on each foot rail and disposed on the frame	Rollers 40, 41, 42, 61 col. 5, ll. 27-30; Figure 2.

VII. The Contested Claims of the '710 Patent (Claims 1-5, 7, and 9-11) are All Invalid Under 35 U.S.C. § 102 and/or 35 U.S.C. § 103 in View of the '321 Patent

36. It is my understanding that, for a prior art reference to "anticipate" a patent claim under Section 102 of the Patent Act, every limitation of the claim must be present (explicitly or implicitly) in the prior art reference.

37. It is my opinion that the '321 patent discloses each and every limitation of the contested claims of the '710 patent. As a result, it is my opinion that each claim of the '710 patent is anticipated by the '321 patent, invalidating each claim, as described in more detail below.

38. All of the elements of claim 1 of the '710 patent are found in the '321 patent. I have included the below chart which shows where, specifically, within the '321 patent each element of claim 1 is located:

Appendix V

Claim Limitation	5,707,321
Frame	Machine frame/base (*i.e.*, 148); col. 4, ll. 26-64; col. 6, ll. 2-4; Figures 3a-d, 5, 6, and 7.
Foot rails	Foot platforms (*i.e.*, 136 and 138); col. 4, ll. 26-64; col. 6, ll. 2-4; Figures 3a-d, 5, 6, and 7.
Stroke rails	First and second connector links (*i.e.*, 144 and 145); col. 4, ll. 26-64; col. 6, ll. 2-4; Figures 3a-d, 5, 6, and 7.
Means for connecting each stroke rail to the frame such that linear reciprocating displacement of the first end of each stroke rail results in displacement of the second end of each stroke rail in a substantially elliptical path [**An axle mounted to a pair of crank arms, a pin projecting from each crank arm, and a collar encircling each pin. The axle is mounted to the frame and each collar is attached to a stroke rail.**]	**Axle**: Shown throughout; *i.e.*, "Crank radius 145 ... revolves about a fixed point on the machine frame 148"; col. 6, ll. 2-4; Figures 3a-d, 5,6, and 7. **Crank arms**: Shown throughout, *i.e.*, crank radius 145; col. 6, ll. 2-4; Figures 3a-d, 5, 6, and 7. **Pins**: Shown throughout; *i.e.*, "Crank radius 145 is rotatably secured to first and second connector link 144 and 140"; col. 6, ll. 2-3; Figures 3a-d, 5, 6, and 7.

Appendix V

	Collar: Shown throughout, *i.e.*, "Crank radius 145 is rotatably secured to first and second connector link 144 and 140"; col. 6, ll. 2-3; Figures 3a-d, 5, 6, and 7. **Axle mounted to frame**: Shown throughout; *i.e.*, "Crank radius 145 ... revolves about a fixed point on the machine frame 148"; col. 6, ll. 2-4; Figures 3a-d, 5, 6, and 7. **Collar attached to a stroke rail**: Shown throughout; *i.e.*, "Crank radius 145 is rotatably secured to first and second connector link 144 and 140"; col. 6, ll. 2-3; Figures 3a-d, 5, 6, and 7.

Appendix V

Means for selectively varying the size of the substantially elliptical path that the second end of each stroke rail travels [**(1) an arm with holes along a portion of its length that can be aligned with a pin and a hole in a stroke rail; or (2) an electric motor driving a gear that engages teeth on a bar to move an adjustment arm.**]	**An electric motor driving a gear that engages teeth on a bar**: "Variations in the shape of the closed curves may be achieved by modifying link lengths and rearranging the points of rotation. By doing so, the curves may approximate near perfect ovals to the aforementioned tear drop shape." Col. 4, ll. 29-32. **to move an adjustment arm**: "Variations in the shape of the closed curves may be achieved by modifying link lengths and rearranging the points of rotation. By doing so, the curves may approximate near perfect ovals to the aforementioned tear drop shape." Col. 4, ll. 29-32.

39. To the extent it is determined that the '321 patent does not specifically disclose the motor or arm structure set forth in Icon's claim construction, it would have been obvious, in view of the direct teaching in the '321 patent to vary link length, to combine the machine of the '321 patent with an actuator or a telescoping arm with holes. Patents that disclose such structures include the '610 patent, U.S. Patent No. 5,549,526 (col. 6, ll. 24-37; Figure 8), and U.S. Patent No. 5,562,574 (col. 4, ll. 35-45; Figure 1).

Appendix V

40. All of the elements of claim 2 of the '710 patent are found in the '321 patent. I have included the below chart which shows where, specifically, within the '321 patent each element of claim 2 is located:

Claim Limitation	5,707,321
Means for connecting each crank arm to a corresponding stroke rail so as to enable free rotation of the axle. **[A pair of collars, each encircling a pin. Each pin projects from a crank arm and each collar is attached to a stroke rail]**	**Crank arms**: Shown throughout, *i.e.*, crank radius 145; col. 6, ll. 2-4; Figures 3a-d, 5, 6, and 7. **Pins**: Shown throughout; *i.e.*, "Crank radius 145 is rotatably secured to first and second connector link 144 and 140"; col. 6, ll. 2-3; Figures 3a-d, 5, 6, and 7. **Collar**: Shown throughout, *i.e.*, "Crank radius 145 is rotatably secured to first and second connector link 144 and 140"; col. 6, ll. 2-3; Figures 3a-d, 5, 6, and 7. **Collar attached to a stroke rail**: Shown throughout; *i.e.*, "Crank radius 145 is rotatably secured to first and second connector link 144 and 140"; col. 6, ll. 2-3; Figures 3a-d, 5, 6, and 7.

Appendix V

41. All of the elements of claim 3 of the '710 patent are found in the '321 patent. I have included the below chart which shows where, specifically, within the '321 patent each element of claim 3 is located:

Claim Limitation	5,707,321
(i) a pin projecting from each crank arm; and (ii) a tubular sleeve rotatably disposed over each pin, each tubular sleeve being rigidly secured to a corresponding stroke rail.	**Crank arms**: Shown throughout, *i.e.*, crank radius 145; col. 6, ll. 2-4; Figures 3a-d, 5, 6, and 7. **Pins**: Shown throughout; *i.e.*, "Crank radius 145 is rotatably secured to first and second connector link 144 and 140"; col. 6, ll. 2-3; Figures 3a-d, 5, 6, and 7. **Collar**: Shown throughout, *i.e.*, "Crank radius 145 is rotatably secured to first and second connector link 144 and 140"; col. 6, ll. 2-3; Figures 3a-d, 5, 6, and 7. **Collar attached to a stroke rail**: Shown throughout; *i.e.*, "Crank radius 145 is rotatably secured to first and second connector link 144 and 140"; col. 6, ll. 2-3; Figures 3a-d, 5, 6, and 7.

Appendix V

42. All of the elements of claim 4 of the '710 patent are found in the '321 patent. I have included the below chart which shows where, specifically, within the '321 patent each element of claim 4 is located:

Claim Limitation	5,707,321
means for conserving momentum generated by rotation of the axle.	Col. 2, ll. 50-53; co. 5, ll. 24-26; col. 6, ll. 33-36; Figures 4 and 6.

43. All of the elements of claim 5 of the '710 patent are found in the '321 patent. I have included the below chart which shows where, specifically, within the '321 patent each element of claim 5 is located:

Claim Limitation	5,707,321
(a) a flywheel mounted to the axis; (b) a weighted wheel rotatably mounted to the frame; and (c) a belt extending from the flywheel to the weighted wheel.	Col. 2, ll. 50-53; co. 5, ll. 24-26; col. 6, ll. 33-36; Figures 4 and 6.

44. While no specific embodiment in the '321 patent discloses a pair of spaced apart tracks and a support stand upstanding therebetween, as required by claim 7, such a feature is just a matter of design choice and could easily

be substituted into the elliptical machine disclosed in the '321 patent. Use of such tracks was well known in the prior art, including as disclosed in U.S. Patent No. 5,540,637 (Figures 1-6) and U.S. Patent No. 5,573,480 (Figures 1-6).

45. All of the elements of claim 9 of the '710 patent are found in the '321 patent. I have included the below chart which shows where, specifically, within the '321 patent each element of claim 9 is located:

Claim Limitation	5,707,321
each stroke rail is curved	Figures 4-6.

46. All of the elements of claim 10 of the '710 patent are found in the '321 patent. I have included the below chart which shows where, specifically, within the '321 patent each element of claim 10 is located:

Claim Limitation	5,707,321
each foot rail is curved	Figure 5.

47. While no specific embodiment in the '321 patent discloses a wheel mounted on a foot rail and disposed on the frame, as required by claim 11, such a feature is just a matter of design choice and could easily be substituted into the elliptical machine disclosed in the '321 patent. Use of such wheels was well known in the prior art, including as disclosed in U.S. Patent No. 5,540,637 (Figures 1-6) and U.S. Patent No. 5,573,480 (Figures 1-6).

Appendix V

VIII. To the Extent Not Anticipated in View of the '814 Patent, Claims 4 and 5 of the '710 Patent are Rendered Invalid as Obvious By the '814 Patent in View of the '610 Patent

48. As discussed above, the '814 patent discloses a two-stage gear reduction. The middle sprocket, 33, which comprises the second stage, is included only to increase the crank speed to obtain the optimum revolutions per minute for operating the alternator. One of ordinary skill in the art would know that this second stage is not necessary and could design and build a machine without that gear reduction.

49. But, even if the '814 patent is deemed not to at least inherently anticipate the elements of claims 4 and 5, those claims are invalid as obvious, as described below.

50. It is my understanding that a claimed invention may be invalid even where it is not identically shown in a prior art reference, that is to say that it is not anticipated. I also understand that, as to an obviousness determination, there is no rigid formula or approach that controls; instead, an expansive and flexible approach is appropriate. Further, the combination of familiar elements according to known methods is likely to be obvious when it does no more than yield predictable results.

51. It would have been obvious for one of skill in the art to use the flywheel arrangement disclosed in the '610 patent, at col. 6, ll. 36-42 and Figure 1 with the elliptical machine disclosed in the '814 patent or the flywheel,

pulley, and belt arrangement disclosed in the '339 patent. One of skill in the art would know that a one-stage pulley system, like that contained in the '610 patent, could be interchanged with the two stage system shown in the '814 patent, with predictable results.

52. In formulating this opinion, I have taken my analysis from the perspective of an engineer or technician with about five years of experience working with the design, maintenance, or manufacture of elliptical exercise machines. I came to this conclusion based on various factors, including the fact that with about five years of experience, one would be familiar with the types of problems encountered in the elliptical exercise machine field and the variety of other products that have been tried and/or commercialized. I also considered that an engineer or technician would have the required technical background, including educational level, to understand the technology.

53. I also understand that "secondary considerations" may be considered as objective evidence of non-obvious, but I have not found any persuasive evidence of this type in the record. For example, despite the fact that Icon has stated in deposition that it desires to have product offerings in every segment of the fitness equipment market, it does not currently offer a front drive elliptical machine with adjustable stride. In fact, it is my understanding that Icon pays a significant royalty to a competitor for its current front drive offering. In short, Icon could broaden its product offering and discontinue royalty payments to a competitor by switching from its current front drive

design to the design described in the '710 patent, but it has not done so.

54. As one with considerable experience in the fitness equipment market, it is clear that Icon places little value on the commercial viability of the elliptical claimed in the '710 patent. To that point, I understand that one of the secondary considerations is "long felt need." Icon has long had the need for a front drive elliptical with adjustable stride, and the fact that it has not made any serious attempt to commercialize the machine disclosed in the '710 patent, makes it clear that long felt need is not a relevant secondary consideration in this case.

55. Further, Icon has no commercial sales of its patented elliptical machine. For reasons discussed in my forthcoming Expert Report relating to infringement issues in this case, which I prospectively incorporate herein by reference, I do not find it reasonable to take into consideration the commercial sales of Octane's machines given the huge disparity between those machines and what is disclosed in the '710 patent.

56. Lastly, I considered the secondary consideration of "failure by others." For the reasons set forth above, the fact that Icon has never commercialized the elliptical it claims in the '710 patent, despite the fact that it pays a competitor a significant royalty for a front drive elliptical machine and has stated that one of its goals is to sell a front drive elliptical with adjustable stride, leads me to conclude that Icon's own failure to commercialize the elliptical in the '710 patent supports a finding of obviousness (to the

Appendix O

(a) a flywheel mounted to the axis;	Octane admits that the Q47 Machine contains this element.
(b) a weighted wheel rotatably mounted to the frame; and	Octane admits that the Q47 Machine contains this element.
(c) a belt extending from the flywheel to the weighted wheel.	Octane admits that the Q47 Machine contains this element.
7. An exercise apparatus as recited in claim 1,	The Q47 Machine does not infringe Claim 7 for the same reasons set forth above with respect to Claim 1, from which Claim 7 depends.
wherein the frame comprises a pair of spaced apart tracks and a support stand upstanding therebetween.	Octane admits that the Q47 Machine contains this element.
9. An exercise apparatus as recited in claim 1,	The Q47 Machine does not infringe Claim 9 for the same reasons set forth above with respect to Claim 1, from which Claim 9 depends.

wherein each stroke rail is curved.	Octane admits that the Q47 Machine contains this element.
10. An exercise apparatus as recited in claim 1,	The Q47 Machine does not infringe Claim 10 for the same reasons set forth above with respect to Claim 1, from which Claim 10 depends.
wherein each foot rail is curved.	Octane admits that the Q47 Machine contains this element.
11. An exercise apparatus as recited in claim 1, further comprising	The Q47 Machine does not infringe Claim 11 for the same reasons set forth above with respect to Claim 1, from which Claim 11 depends.
a wheel mounted on each foot rail and disposed on the frame	Octane admits that the Q47 Machine contains this element.

Appendix O

DATED: August 26, 2009

By /s/_____

Rudolph A. Telscher, Jr., Esq.
Matthew L. Cutler, Esq.
HARNESS DICKEY AND PIERCE
7700 Bonhomme Avenue, Suite 400
St. Louis, MO 63105

Attorneys for Defendants
Octane Fitness, LLC

APPENDIX P — ICON'S OPPOSITION TO MOTION FOR SUMMARY JUDGMENT OF NON-INFRINGEMENT, DATED MARCH 8, 2011

IN THE UNITED STATES DISTRICT COURT
FOR THE DISTRICT OF MINNESOTA
FOURTH DIVISION

Case No.: 0:09-cv-00319 (ADM/SRN)

ICON HEALTH & FITNESS, INC.,
a Delaware corporation,

Plaintiff,

vs.

OCTANE FITNESS, LLC,
a Minnesota limited liability company,

Defendant.

ICON'S MEMORANDUM IN OPPOSITION TO OCTANE'S MOTION FOR SUMMARY JUDGMENT OF NON-INFRINGEMENT

[TABLES INTENTIONALLY OMITTED]

ICON Health & Fitness, Inc. ("ICON") submits this Memorandum in Opposition to Octane Fitness, LLC's ("Octane") Motion for Summary Judgment on Non-Infringement.

Appendix P

INTRODUCTION

In its motion, Octane asserts that its accused machines lack four limitations of claim 1 of ICON's patent. Based on that assertion, it asks for summary judgment of non-infringement. But Octane's motion relies on several egregious legal errors, relies on completely irrelevant and unsupportable assertions about the commercial viability of Icon's patented design, and completely ignores genuine issues of material fact. At least two of the four "limitations" on which Octane relies are not "limitations" of the claims at all, and Octane has misinterpreted the Court's construction of the other two.

First, Octane asks the Court to find that the accused devices cannot infringe because they lack a "stroke rail" under the Court's claim construction. Octane's arguments, however, rely on a strained *interpretation* of the Court's interpretation of "stroke rail." Moreover, Octane ignores its own admissions that at least the Q47 machine includes a stroke rail and its own technical expert's failure to include any of these new arguments in his expert report. Finally, even if Octane had any testimony (rather than attorney argument) to support this new theory, ICON's expert has presented extensive and thorough testimony on infringement by equivalents. This testimony precludes summary judgment.

As for the remaining limitations, they are claim limitations drafted in means-plus-function format. Octane has egregiously misapplied the law with respect to each. First, with respect to the functional requirement

associated with the "means for connecting" limitation, Octane misinterprets the function as requiring more than the function recited, which is merely "connecting" the stroke rail to the frame. Second, Octane argues that because it does not practice the identical function it has identified, there can be no consideration of equivalents at all. This is a gross error in law. Even if the Court applied Octane's function for this limitation, the accused devices would still perform an *equivalent function* so that there is infringement under the doctrine of equivalents.

As for the structural requirement associated with the "means for connecting," Octane contends that because it does not have particular individual components the Court has listed as part of the "corresponding structure" it cannot infringe. In doing so, Octane asks the Court to commit legal error. For literal infringement of a means-plus-function claim, the test is not whether any particular component that comprises the "corresponding structure" is present or even whether an equivalent of that particular component is present; rather, the test is whether there is an equivalent to the overall combination of components comprising the "corresponding structure." Thus, Octane's arguments that it does not infringe because it does not have an equivalent to a "C-channel" or an equivalent to an "adjustment arm" or a "rod" apply the wrong analysis. As articulated in more detail below, Octane has also misapplied the law with respect to other aspects of § 112, ¶ 6 and the doctrine of equivalents.

In addition to running roughshod over the law, Octane also seeks to ignore the facts. On summary judgment, all

facts must be viewed in a light most favorable to ICON. Octane wishes to completely ignore the testimony of ICON's expert, Dr. Rasty, and to draw all inferences in favor of Octane. Octane has not and cannot escape the genuine factual disputes that remain as to literal infringement and infringement by equivalents.

Not only does Octane wish to ignore facts presented by Dr. Rasty, it attempts to create facts out of whole cloth, repeatedly inviting the Court to rely on completely irrelevant and unsupportable assertions about the commercial viability of ICON's patented design. Octane also relies on the testimony of its expert, Mr. Lenz, in an attempt to convince the Court that the design of the '710 patent suffers from "disadvantages" that would make it commercially unacceptable and, therefore, no equivalence can exist. Mr. Lenz's opinions are, however, illusory and unsupported by any study or analysis he has done on the accused devices or patented design (indeed he has conducted no testing or studies at all).

Specifically, Mr. Lenz bases his opinion on an analysis of the drawings in the patent, which, by his own admission, disclose only the roughest form of prototype in the design process. He then takes that analysis of the rough prototype, compares it to a commercial product, and concludes that the patented design must not be a commercially viable design because the prototype is not commercially viable. In other words, Mr. Lenz's testimony is that a prototype-grade elliptical would not be a successful commercial product. This apples-to-oranges comparison manifests a completely irreconcilable

disconnect with reality and should be disregarded by the Court. Furthermore, Mr. Lenz bases this opinion solely on an analysis conducted by employees at Octane, rather than an analysis that he conducted himself. Indeed, he doesn't even know who did the analysis, nor can he say that it is accurate. Even putting aside that all factual inferences are to be drawn in favor of ICON rather than Octane, this is certainly not the kind of record on which the Court can base a grant of summary judgment of non-infringement.

Finally, Octane has not identified a specific set of facts it contends are not in dispute and which allow it to seek summary judgment. ICON submits that Octane has not listed such a set of facts because it cannot. Some of the "facts" Octane does articulate would be relevant if they were undisputed, but as ICON establishes below, they are in dispute—preventing entry of summary judgment. Some of the "facts" articulated by Octane are simply irrelevant and others are unsupported by the record. These include invective statements to the effect that ICON's patented elliptical design is "commercially worthless," "does not work" and that if ICON could commercialize its patent it could avoid paying a [REDACTED] These statements are factually unsupported and all such statements are addressed in a summary of disputed facts at the conclusion of this brief.

Because a proper legal analysis and a view of the facts in the light most favorable to ICON demonstrates that there is at least a genuine issue as to infringement, ICON respectfully submits that the present motion should be denied.

Appendix P

ARGUMENT

I. There Is Infringement Because Octane's Machines Have The Required "Stroke Rail" Or At Least An Equivalent

A. There Is Literal Infringement Because Octane's Machines Have A "Stroke Rail"

Octane's first argument is that neither of its accused machines have a "stroke rail." Octane bases this argument on an *interpretation* of the words in the Court's construction of this term. The Court construed "stroke rail" to mean: "A linear or curved rail, which may be made to vary in length, *extending from a foot rail to a frame* on an elliptical machine." (Dkt. 144, p. 8 (emphasis added)). Octane now argues that "there is no part of Octane's linkage that *extends from a foot rail to the frame.*" (O.Bf. at 10). But whether this argument is correct depends on what it means to "extend[] from a foot rail to a frame." This was not a point of discussion in the claim construction briefing between the parties, nor was it a point of discussion in the Court's claim construction order. As will be demonstrated below, Octane's interpretation of that language must be rejected because it would cause the Court's construction to fail to read on any of the disclosed embodiments in the patent. Such a construction is "rarely, if ever, correct." *Johns Hopkins Univ. v. CellPro, Inc.*, 152 F.3d 1342, 1355 (Fed. Cir. 1998) (quoting *Vitronics Corp. v. Conceptronic, Inc.*, 90 F.3d 1576, 1583 (Fed. Cir. 1996)).

Appendix P

Before addressing the error in Octane's interpretation of the Court's construction, it should first be noted that the entry for "stroke rail" in Octane's Claim Chart, served on August 24, 2009, states: "**Octane admits that the Q47 Machine contains this element.**" (Exh. 1, Defendant Octane Fitness' Claim Chart ("Octane's First Claim Chart") p. 2 (emphasis added)).[1] Octane later argued that the Q47 does not have "a stroke rail that is attached to a collar," (Exh. 2, Defendant Octane Fitness' Supplemental Claim Chart ("Octane's Supp. Claim Chart") p. 2), but it has never withdrawn its concession that the Q47 has a "stroke rail." And Octane should not be allowed to renege on that admission now. At the very least, Octane's admission shows that Octane's interpretation of the Court's construction is extremely dubious.

In order to understand the error in Octane's interpretation, it is first necessary to understand how Octane is applying that interpretation. Octane argues that "there is no part of Octane's linkage that *extends from a foot rail to the frame.*" (O.Bf. at 10, 22). Photographs of Octane's Q47 and Q45 mechanisms are shown below, with relevant labels and markings:

---

1. All referenced Exhibits are attached to the Declaration of C.J. Veverka filed contemporaneously with the present memorandum.

Appendix P

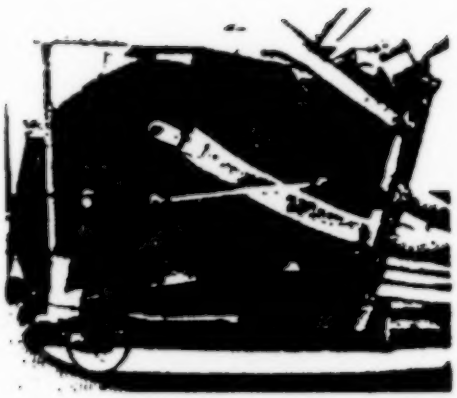

Q47

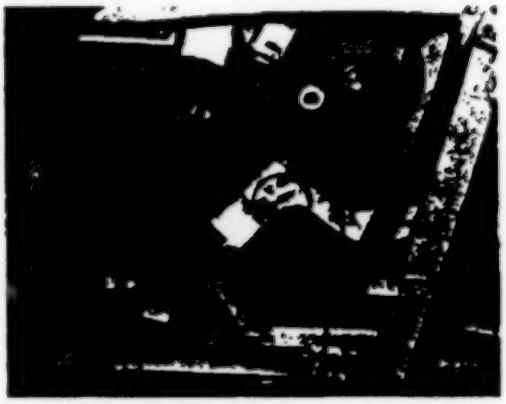

Q45

As can be seen, in the Octane Q47 machine, there is a part called, an "actuator casting" (labeled as "1" in the photographs) that connects to other parts at three points, circled in red. At its top end, the "actuator casting" connects to a "foot rail" (labeled as "2") via a pin/hole arrangement. At its bottom end, the "actuator casting" connects to a part that Octane's brief calls a "rocker link" (labeled as "3"),[2] also via a pin/hole arrangement. The "rocker link," in turn, is connected to a stationary portion of the Q47 machine. The middle of the "actuator casting" is also connected to a "swing arm" (labeled as "4"), also via a pin/hole arrangement. The "swing arm," in turn, is connected to a "crank arm" (labeled as "5") that is mounted to a stationary portion of the Q47 machine.

In the Q45 machine, the "actuator casting" is also connected to other parts at three points. The only

2. Octane's engineering drawings refer to this part as a "stability link," and therefore ICON's expert has used that term in his expert report.

differences are that the "actuator casting" is connected to the "foot rail" via an integrated-screw-motor that is mounted to the "actuator casting" and there is no "swing arm." Instead the "crank arm" (5) connects to the "actuator casting" through a hole formed through the middle of the "actuator casting."

The claim requires a "stroke rail," and the Court's claim construction requires that a "stroke rail" "extend[] from a foot rail to a frame." (Dkt. 144, p. 8). Octane argues that in both the Q45 and Q47 devices the actuator casting cannot be a "stroke rail" because it is "the rocker link [that] extends to the frame, not the actuator casting." (O.Bf. 10). Thus, Octane's argument is that the Court's "extending from a foot rail to a frame" language does not allow any intervening parts between the stroke rail and the frame. It is in this way that Octane argues that the "actuator casting" does not "extend[] from a foot rail to a frame."

The problem with Octane's argument is that it would cause the Court's construction to fail to read on any disclosed embodiment in the patent. This can be seen by examining Figure 1 of the patent, reproduced below, with a close-up view of a particularly relevant portion of that figure:

Appendix P

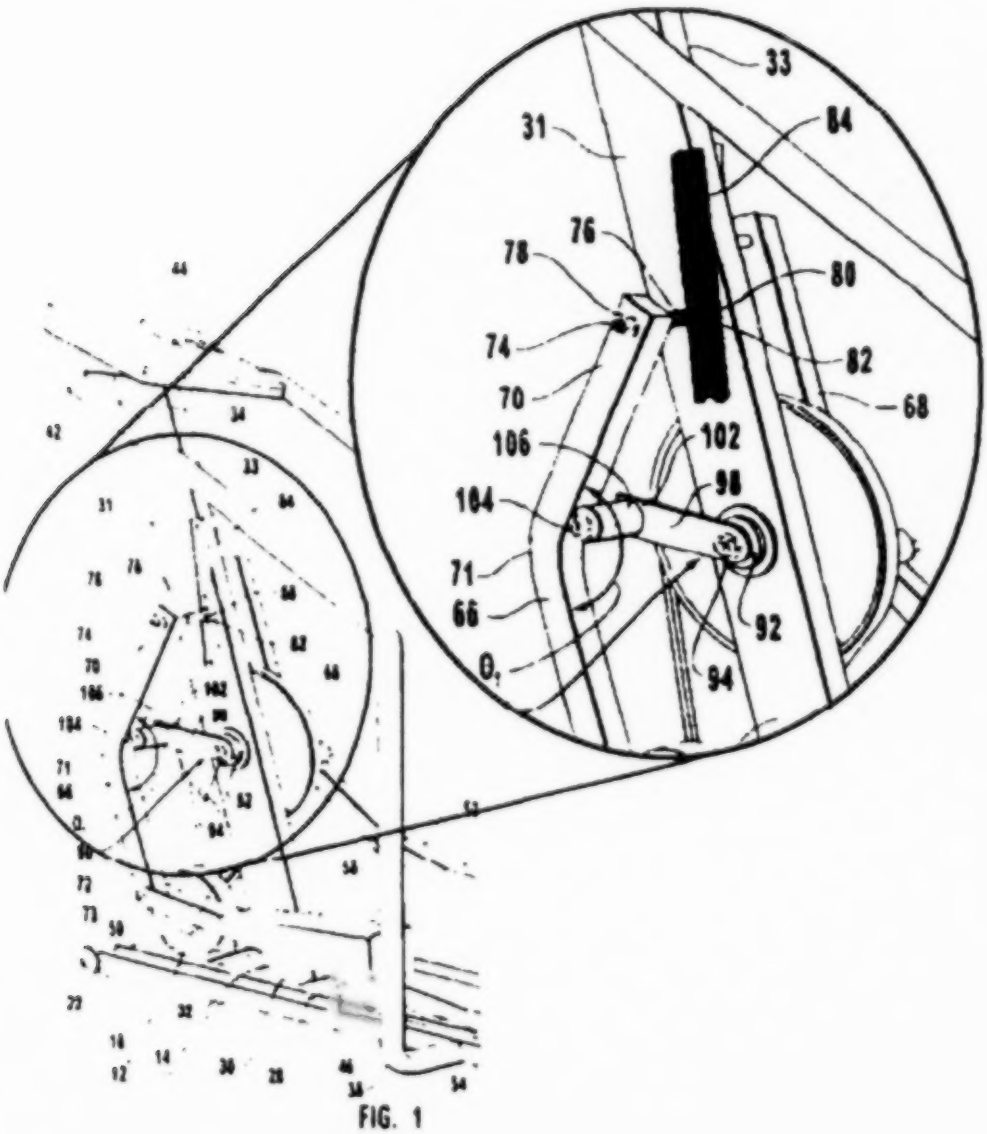

FIG. 1

There is no dispute that item 66 is a "stroke rail." There is also no dispute that item 16 is a "support stand" and is part of the "frame." The patent expressly refers to them as such. (Exh. 3, U.S. Patent 6,019,710 patent

("'710 patent", 3:64-64, 3:24-25). Significantly, however, there are intervening parts between stroke rail 66 and support stand 16. Specifically, shown above in red is a pin 76 with a flared head 82 positioned within the C-shaped channel 84. These are intervening parts between the "stroke rail" and the "frame." The same is true for the alternative embodiments shown in Figures 4, 5 and 6 of the '710 patent. *Id.*

Under Octane's interpretation of the Court's construction, stroke rail 66 would not "extend[]...to a frame" because there are intervening parts between the stroke rail 66 and the frame. Octane's interpretation must be rejected because it causes the Court's construction to fail to read on any of the disclosed embodiments. Octane's interpretation would cause the disclosed embodiments to fail to have a "stroke rail," when it is clear that they do.

Octane relies on the Patent Office's statement of reasons for allowance to interpret the Court's construction (O.Bf. 10), but that statement actually supports ICON's position, not Octane's. The statement reads:

> The prior art fails to show or teach applicant's claimed exercise apparatus comprising a frame; a pair of foot rails having foot supports; a pair of stroke rails each having one end hingedly connected to a respective foot rail ***and having the opposite end connected to the frame*** for linear reciprocating movement and for producing an elliptical path.

(Exh. 4, Notice of Allowability (emphasis added)). Note that the statement does not require that the stroke rail "extend[]...to a frame" in the sense that there are no intervening parts between the stroke rail and the frame, but only in the sense that the end of the stroke rail is "connected to the frame." In both the Q47 and Q45 devices, the "actuator casting" is clearly "connected to the frame" (via intervening parts) and therefore "extend[s]... to a frame" as a correct interpretation of the Court's claim construction requires. Thus, the "actuator casting" in the Q47 and Q45 machines qualifies as a "stroke rail."[3]

B. There Is Literal Infringement By Octane's Q45 Machines Because They Have A "Stroke Rail" That Is "Hingedly Attached" To A Foot Rail

Octane also argues that even if its Q47 and Q45 machines have a "stroke rail," the Q45 machine does not have a "stroke rail" that is "hingedly attached" to a foot rail, as claim 1 requires. (O.Bf. 10, 22). Specifically, Octane

---

3. If the Court interprets the "extending from a foot rail to a frame" language in its construction so as to preclude literal infringement as a matter of law, ICON respectfully requests that the Court reconsider its claim construction so that it clearly reads on the disclosed embodiments. *See Jack Gutman, Inc. v. Kopykake Enterprises, Inc.*, 302 F.3d 1352, 1361 (Fed. Cir. 2002) ("District courts may engage in a rolling claim construction, in which the court revisits and alters its interpretation of the claim terms as its understanding of the technology evolves."). There is no basis in the specification for limiting the term "stroke rail" in the manner now proposed by Octane. This is particularly evident where Octane has already admitted that its Q47 machine has a "stroke rail."

contends that (1) the only thing in the Q45 device that can qualify as a "stroke rail" is the "actuator casting" and (2) the "actuator casting" is not "hingedly attached" to a foot rail. Instead, a motor with an integrated screw is fixedly attached to the "actuator casting," and it is the integrated screw that is "hingedly attached" to a foot rail.

Octane's argument must be rejected because there is no reason that the *combination* of the "actuator casting" and the integrated-screw motor cannot qualify as a "stroke rail." The Court expressly stated in the claim construction order that its construction "encompasses both a unitary stroke rail and an adjustable stroke rail." (Dkt. 144, p. 8). Octane now seeks to ignore this explanation and limit the Court's construction to "a unitary stroke rail." Once again, this would be improper because it would cause the claim to fail to read on any disclosed embodiment, which is a result that is "rarely, if ever, correct." *Johns Hopkins*, 152 F.3d at 1355.

The claim requires "means for selectively varying the size of the substantially elliptical path that the second end of each stroke rail travels." The embodiments that have this "means for selectively varying" are shown in Figures 5 and 6, both, reproduced below. In these figures there is an adjustable stroke rail comprised of at least two parts, including an "adjustment arm" 142:

Appendix P

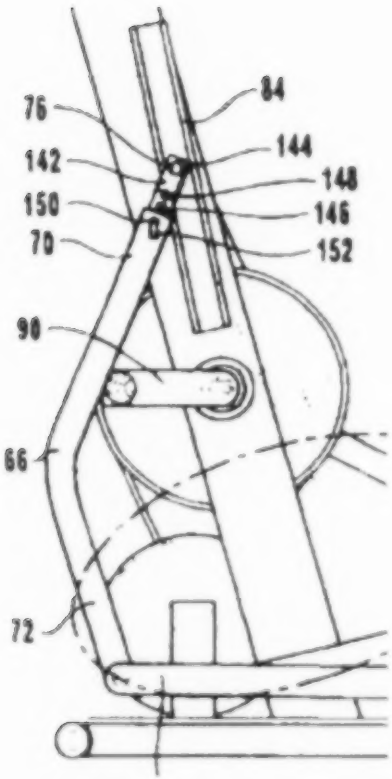

Fig. 5

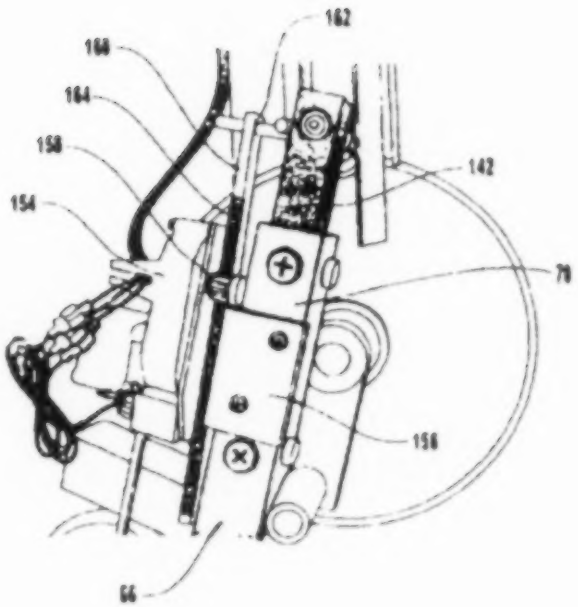

Fig. 6

Similarly, the combination of the "actuator casting" and integrated-screw motor in the Q45 machine qualifies as an "adjustable stroke rail" comprised of two parts. This combination is shown in the engineering drawing to the right.

In Figure 5 of the '710 patent, when the adjustment arm is slid in or out, the effective length of the stroke rail is decreased or increased, and the size of the elliptical path followed by the foot rail is adjusted. (Exh. 3, '710

patent, 6:28-34). Similarly, when the integrated screw in the Q45 machine is adjusted, the effective length of the "actuator casting" is increased or decreased, and the size of the elliptical path followed by the foot rail is adjusted. Declaration of Jahan Rasty, Ph.D. ("Rasty Decl."), Exh. 1, pp. 8, 14.[4] Indeed, in Figure 5, the adjustment arm is shown at the end of the stroke rail that is coupled to the C-channel 84, but the '710 patent explains that the adjustment arm can be placed "at either end" of the stroke rail. (Exh. 3, '710 patent, 6:47). When the adjustment arm is placed at the other end of the stroke rail, it is at the end that is coupled to the foot rail 46, just as the integrated screw in Octane's Q45 machine is coupled to the foot rail. For all the reasons that the two-part combination described in the patent qualifies as an adjustable "stroke rail," so also does the two-part combination in the Q45 machine. The Court's claim construction order makes clear that an "adjustable stroke rail" is covered and that there is no requirement for a "unitary stroke rail."

4. Exh. 1 to Dr. Rasty's Declaration is his Expert Report ("Rasty Report") opining on infringement by Octane.

C. Even If Octane's Machines Lack The Required Stroke Rail, There Is Still Infringement Under the Doctrine of Equivalents

In the event the Court were persuaded that the "stroke rail" of the '710 patent is not present (*i.e.*, the structures identified by ICON do not "extend" to the frame or that a one-piece stroke rail is required), the Q45 and Q47 machines still infringe under the doctrine of equivalents. Infringement under the doctrine of equivalents exists is found if the differences between the claimed element and a corresponding component in the accused device are "insubstantial." *Warner-Jenkinson Co. v. Hilton Davis Chemical Co.*, 520 U.S. 17, 34, 40 (1997). One method used to determine if such differences are insubstantial is to assess whether the component in the accused device performs the same function as the claimed element, in substantially the same way, to achieve the same result. *Id.* That is the case here.

1. There Is At Least A Genuine Issue That Extending To The Rocker Link of the Accused Devices Is An Equivalent Of Extending To The C-Channel Structure of the Disclosed Embodiments

Octane argues that the actuator castings of the Q45 and Q47 are not "stroke rails" because they do not "extend from a foot rail to a frame." More specifically, Octane contends that an actuator casting terminating at a "rocker link" coupled to the frame, rather than terminating at a C-channel coupled to a frame, cannot satisfy the "extends

from a foot rail to a frame" requirement. However, a comparison of the functioning of the rocker link in the accused products to the functioning of the C-channel in the disclosed embodiment of the '710 patent reveals that the differences are insubstantial.

ICON's expert, Dr. Rasty, has testified that the rocker links and C-channel structures both function to restrain lateral movement of the first end of the stroke rail. These structures both limit lateral movement of the first end of the stroke rail by providing rigid metal constraints. The result achieved by both the rocker links and C-channel structures are identical: they both guide the first end of the stroke rail through reciprocating transverse motion while preventing unwanted lateral motion. (Exh. 1, Rasty Decl., pp. 13 – 16).[5] Thus, even if the "actuator casting" cannot qualify as a "stroke rail" because it connects to the frame via a rocker link rather than a C-channel structure, the actuator casting still qualifies as an equivalent of the "stroke rail" because connecting to the frame via a rocker link is equivalent to connecting to the frame via the C-channel structure. Dr. Rasty's testimony is sufficient evidence to raise a genuine issue as to the material fact of equivalence. A determination of equivalents is a fact question. *Interactive Pictures v. Infinite Pictures, Inc.*, 274 F.3d 1371, 1376, 1382-84 (Fed. Cir. 2001).

---

5. As noted above, Octane's engineering drawings refer to the "rocker links" as "stability links." Therefore, that is the terminology used in Dr. Rasty's report.

Appendix P

2. There Is At Least A Genuine Issue That The 3P Link Actuator of the Q45 is Equivalent to a Unitary or Single-Piece Stroke Rail

If the Court is persuaded that the stroke rail element requires a unitary or single-piece structure so that the Q45 does not have a "stroke rail" that is "hingedly attached" to the foot rail, the 3P Actuator Link of the Q45 still satisfies this requirement under the doctrine of equivalents. The 3P Actuator Link is a group of pieces that are shown in Octane's engineering documents as a single unit:

Appendix P

[

REDACTED

]

(Exh. 5, OCTANE 021175 (3P Actuator Link (Q45)). As Dr. Rasty has testified, during use of the Q45, these components comprising the 3P Actuator Link are rigidly locked together and therefore function as a single part. This rigid relationship is shown in the video clip of a Q47 in use. (Exh. 6). The rigid relationship of the 3P Actuator Link allows it to function identically as a single-piece structure interconnecting the frame and foot rail for the purpose of allowing the foot rail to move in a "substantially elliptical path." *Id.* Indeed, the multi-part stroke rails of the '710 patent are also held in rigid relation during use it the same manner. Exh. 3, '710 patent, Figures 5, 6. All of this evidence is sufficient to raise at least a genuine issue as to the material fact of equivalence.

II. There Is Infringement Because Octane's Machines Meet The "Connecting" Function, Either Literally Or Under The Doctrine of Equivalents

Octane's next argument is that its machines "do not have any part of its linkage...that moves in a straight or 'linear' path." (O.Bf. 1, 12, 22). This argument is an assertion that Octane's machines do not meet the requirement in claim 1 of "means for connecting each stroke rail to the frame such that linear reciprocating displacement of the first end of each stroke rail results in displacement of the second end of each stroke rail in a substantially elliptical path." More specifically, Octane's argument is an assertion that its machines do not literally meet the *function* set forth in this means-plus-function element.[6]

---

6. Octane also asserts that its machines do not meet the *structural* requirements for this means-plus-function element.

Appendix P

Octane is wrong. Octane's machines literally perform the "connecting" function, as that function is properly construed, so that there is literal infringement. Even if Octane's construction of the "connecting" function is adopted, Octane's machines still perform an equivalent function so that there is infringement under the doctrine of equivalents.

A. There Is Literal Infringement Because Octane's Machines Literally Perform The "Connecting" Function

Octane's non-infringement argument relies heavily on its construction of the function of the "means for connecting" element. The Court's construction of the term "linear reciprocating displacement" in this function is fairly clear, but its construction of the remainder of the function is unclear. On the meaning of "linear reciprocating displacement," the claim construction order states that "[n]othing in the '710 patent indicates that the first end of the stroke rail should move in anything other than a straight line." (Dkt. 144, p. 9). Therefore, it appears that the Court understood that term to mean "movement back and forth in a straight line." However, the Court's analysis of the meaning of the remainder of the function is unclear.

In its most direct analysis of the meaning of the remainder of the function, the Court's claim construction order states that the function "requires no construction because the plain and ordinary meanings of the terms used

---

(O.Bf. 1, 13, 22-24). Those assertions are addressed below in section II.C.

to describe the function are sufficiently clear." (Dkt. 144, p. 10). However, in identifying the "corresponding structure" for this function, the claim construction order seems to rely on the following construction: "The function of this claim phrase is to connect the stroke rail to the frame in such a way as to cause the first end of the stroke rail to undergo linear reciprocating displacement (which then causes the second end of the stroke rail to move in an elliptical path)." (Dkt. 144, p. 11).

If the Court's construction of the function is that "the plain and ordinary meanings of the terms" apply (Dkt. 144, p. 10), then the Octane machines have a "means" for performing that function and the Octane machines literally infringe. On the other hand, if the Court's construction of the function is "to connect the stroke rail to the frame in such a way as to cause the first end of the stroke rail to undergo linear reciprocating displacement (which then causes the second end of the stroke rail to move in an elliptical path)" (Dkt. 144, p. 11), then ICON respectfully submits that construction is clearly erroneous. Octane's arguments rely entirely on the erroneous construction.

Nowhere does the claim state that the "means" must "*cause* the first end of the stroke rail to undergo linear reciprocating displacement," as the claim construction order is read by Octane. Rather, the claimed function is "connecting." The claim merely requires "means" that "connects each stroke rail to the frame" "such that linear reciprocating displacement of the first end of each stroke rail results in displacement of the second end of each stroke rail in a substantially elliptical path." (Exh. 3, '710 patent, 7:20-24). That language assumes

that the "linear reciprocating displacement" has *already been caused*, and the function of the required "means" is to connect each stroke rail to the frame so as to convert that displacement into elliptical motion. Some other "means"—not required in this claim—"causes" the "linear reciprocating displacement." This is the "plain and ordinary meaning" of the claim language.

The Octane machines plainly have a "means" that performs the required function. The structure that performs this function in both devices is illustrated below:

[

REDACTED

]

Appendix P

[

REDACTED

]

As can be seen, the structures that "connect[] each stroke rail to the frame" at the crank shaft are highlighted in yellow. (Exh. 1, Rasty Decl., p. 7). These structures convert linear reciprocating displacement at the first end of the actuator-casting stroke rail into "a substantially elliptical path" at the second end of the stroke rail, as the function requires. *Id.* That same structure *also* converts slightly arcuate motion at the first end of the actuator-casting stroke rail into a "substantially elliptical path" at the second end of the stroke rail. *Id.* at 12, Appendix E. It so happens that there is no means for "causing" "linear reciprocating displacement" in the Octane device, but only a means for causing slightly arcuate motion. But that does not detract from the fact that the Octane device does have the "connecting means" required by the claim. A means for "causing linear reciprocating displacement" is not required.

B. At the Very Least, There is Infringement Under the Doctrine of Equivalents Because Connecting With Slightly Arcuate Motion Is Equivalent to Connecting With Linear Motion

Even if the Court accepts Octane's construction of the "connecting" function, there is still a genuine issue as to infringement under the doctrine of equivalents because there is substantial evidence that Octane's devices perform an "equivalent" function. *See General Elec. Co. v. Nintendo Co.*, 179 F.3d 1350, 1356 (Fed. Cir. 1999) (holding that even though the accused systems did not literally infringe because they did not perform the required function, there would still be infringement under the doctrine of equivalents if they "perform an equivalent function"); *WMS Gaming Inc. v. Int'l Game Technology*, 184 F.3d 1339, 1352-54 (Fed. Cir. 1999) (affirming finding of infringement under the doctrine of equivalents where accused device performed equivalent function using equivalent structure); *Interactive Pictures Corp. v. Infinite Pictures, Inc.*, 274 F.3d 1371, 1381-82 (Fed. Cir. 2001) (same).

1. There Is At Least A Genuine Issue As To Whether Slightly Arcuate Motion Is Equivalent to Linear Motion

As noted above, Octane's interpretation of the claimed function is "connect[ing] the stroke rail to the frame in such a way as to cause the first end of the stroke rail to undergo linear reciprocating displacement (which then causes the second end of the stroke rail to

move in an elliptical path)." (Dkt. 144, p. 11). The only reason it can be argued that the Octane devices do not perform this function is that they do not cause "linear reciprocating displacement" but instead "slightly arcuate motion." The diagram shown at page 12 of Octane's brief is misleading because it implies that the end of the rocker link moves along a complete semi-circle. (O.Bf. 12). But the end of the rocker link does not even come close to moving along a complete semi-circle; it only traces an arc that comprises a very small portion a large semi-circle. As explained below, there is infringement under the doctrine of equivalents here because use of a slight arc is "equivalent" to use of a straight line in this context. Whether there is equivalence is a question of fact. *Interactive Pictures*, 274 F.3d 1376, 1382-84 (Fed. Cir. 2001).

With only attorney argument, Octane characterizes the "linear reciprocating displacement" as "a primary point of the invention." (O.Bf. 30). But the testimony of Dr. Rasty shows that a slight arc is insubstantially different from a straight line in this context. The testimony of Dr. Rasty shows that the function performed by the Octane devices is equivalent to Octane's interpretation of the claimed function.

Based upon data Dr. Rasty himself compiled during his personal inspections of both Q45 and Q47 devices, he and trained engineers at his direction generated kinematic computer models to study movement of the accused devices. Using these kinematic computer models Dr. Rasty was able to determine that substituting a straight-

line path reciprocation for the slight arcs of the Q45 and Q47 at the first end of the stroke rails had no meaningful effect on the elliptical path traveled by the second end of the stroke rails. The negligible differences that this substitution made is illustrated by the path tracings attached to his report as Appendix E:

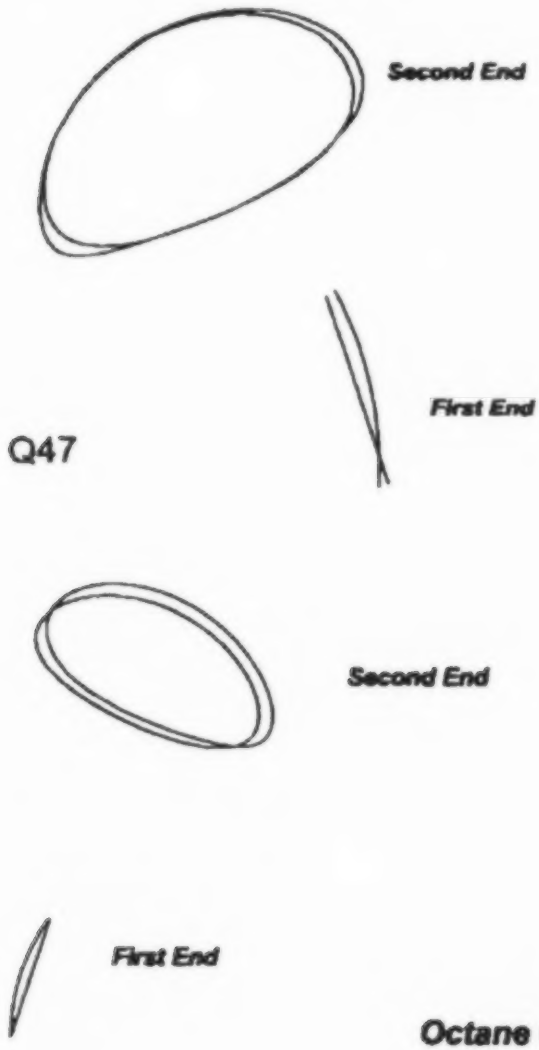

Appendix P

These figures illustrate Dr. Rasty's comparison of the actual paths traveled by the first and second ends of the stroke rails in both the Q45 and Q47 machines (blue paths) with the paths that would be traveled if the slight arc were a straight line (red paths). The use of kinematic computer models allowed Dr. Rasty to model what would happen if the slight arc traveled by the first end of the stroke rails in the Q45 and Q47 machines were replaced with straight line motion. Remarkably, the red ellipses almost fall exactly on top of the blue ellipses. *Id.* at 5, 12 and Appendix E. This is the epitome of an "insubstantial difference."

Octane's technical expert, Mr. Lenz, who did not conduct any studies at all, has not refuted these results. Instead, Mr. Lenz disagrees with Dr. Rasty's ultimate conclusion on "equivalence" by relying only on an opinion of how a "rough prototype" of the '710 patent would fair commercially. As discussed more fully below, Mr. Lenz's testimony and conclusions are based on a series of questionable assumptions.

In any event, the fact that Octane's expert disagrees as to the ultimate conclusion on "equivalence" does not justify summary judgment against ICON; it merely serves to illustrate that there is a genuine dispute on this factual issue. On summary judgment, "[t]he evidence of the non-movant is to be believed, and all justifiable inferences are to be drawn in his favor." *Anderson v. Liberty Lobby, Inc.*, 477 U.S. 242, 255 (1986).

2. Octane's Legal Arguments Against The Doctrine of Equivalents Are Flawed

Octane presents a slew of arguments seeking to demonstrate that, as a matter of law, there can be no infringement under the doctrine of equivalents. All of Octane's legal arguments are deeply flawed.

First, Octane argues broadly that the '710 patent is not a "pioneer patent" and must therefore be "given only a correspondingly narrow range of equivalents." (O.Bf. 25-26). It asserts that the face of the '710 patent shows that the Patent Office considered 27 patents when deciding to grant the '710 patent and argues that this number of patents somehow precludes the '710 patent from being a "pioneer" patent and the Octane machines from infringing under the doctrine of equivalents. (O.Bf. 26). But, as the Federal Circuit has explained, "no objective legal test separates pioneers from non-pioneers." *Augustine Medical, Inc. v. Gaymar Industries, Inc.*, 181 F.3d 1291, 1301 (Fed. Cir. 1999). And therefore merely relying on the "pioneer" or "non-pioneer" status of a patent to deny infringement under the doctrine of equivalents is legal error. *Abbott Laboratories v. Dey L.P.*, 287 F.3d 1097, 1105 (Fed. Cir. 2002) (reversing district court that based denial of equivalents on reasoning that "the...patent was an 'improvement' of [another] patent, instead of a pioneer patent"). Octane must actually point to something within those 27 patents that limits the scope of equivalents.[7]

---

7. Octane has not undertaken that analysis and cannot properly attempt it in its Reply. If Octane is allowed to make this argument for the first time in its Reply, ICON will seek leave to respond.

Appendix P

The proper way to analyze whether the prior art limits the scope of equivalents is to construct a hypothetical claim which is just broad enough to literally cover the accused device and which is not narrower than the claim at issue in any respect, and to then assess whether the hypothetical claim would be valid in light of the prior art. *Abbott*, 287 F.3d at 1105-07; *Wilson Sporting Goods Co. v. David Geoffrey & Associates*, 904 F.2d 677, 684 (Fed. Cir. 1990). However, Octane has not attempted this analysis, nor has it presented any evidence that any of the 27 patents listed on the face of the '710 patent would invalidate a hypothetical claim with all of its limitations. For all that Octane has established, the 27 patents could be completely off-base.

Octane does point to a patent not listed on the face of the '710 patent (U.S. Patent No. 5,707,321) as a prior art patent that allegedly discloses "the basic structure of Octane's linkage system." (O.Bf. 28, 30-31). But a disclosure of "the basic structure of Octane's linkage system" is insufficient. A hypothetical claim would not be invalid unless the prior art discloses *all* of the limitations of the claim so that it would be anticipated (as set forth in 35 U.S.C. § 102) or unless the hypothetical claim *as a whole* would have been obvious to a person of ordinary skill in the art (as set forth in 35 U.S.C. § 103). *Abbott*, 287 F.3d at 1105-07. It is legal error to compare only one or some limitations of the claim to the prior art "while ignoring other limitations of the claim." *Id.* at 1106. In particular, the U.S. Patent No. 5,707,321 cited here fails to disclose any "means for selectively varying" the size of a substantially elliptical path traveled by a stroke rail.

Because this would be a limitation of the hypothetical claim and because the prior art cited here does not disclose this limitation, the prior art cannot preclude ICON's theory of equivalence, for, at least, that reason.

Focusing on the "connecting function" more specifically, Octane argues that there can be no infringement under the doctrine of equivalents for the "connecting" function because "use of non-linear linkage paths was well known prior to the '710 filing date." (O.Bf. 30). But that argument also relies on erroneous legal reasoning. A claim *limitation* can encompass prior art. It is only when the *claim as a whole* encompasses prior art that there is a problem. *Intel Corp. v. United States Int'l Trade Comm'n*, 946 F.2d 821, 843 (Fed. Cir. 1991) ("Claim limitations may, and often do, read on the prior art, particularly in combination patents.").

To make its argument, Octane relies on *Chiuminatta Concrete Concepts, Inc. v. Cardinal Industries, Inc.*, 145 F.3d 1301, 1310-11 (Fed. Cir. 1998). Octane asserts that *Chiuminatta* precludes ICON from arguing that a function involving a slightly arcuate displacement is equivalent to a function involving linear displacement because "such a limitation is not 'after-developed' technology." (O.Bf. 29-30). But that same argument was squarely rejected by the Federal Circuit in *Interactive Pictures Corp. v. Infinite Pictures, Inc.*, 274 F.3d 1371 (Fed. Cir. 2001). In *Interactive Pictures*, the infringer, also relying on *Chiuminatta*, argued that the patentee could not assert infringement by equivalents because the structure used in the accused device predated the patent. *Id.* at 1381. The Federal Circuit rejected that argument:

> In *Chiuminatta*, we held that a finding that a component of an accused product is not a structure "equivalent" to the corresponding structure of a means-plus-function limitation for purposes of literal infringement analysis precludes a finding that the same *structure* is equivalent for purposes of the doctrine of equivalents, unless the component constitutes technology arising after the issuance of the patent. However, when a finding of noninfringement under 35 U.S.C. § 112, paragraph 6, is premised on an absence of identical *function*, then infringement under the doctrine of equivalents is not thereby automatically precluded.

Id. at 1381-82. Here, of course, ICON's assertion that slightly arcuate motion is equivalent to "linear reciprocating displacement" is because of "an absence of identical function," not structure. Therefore, infringement under the doctrine of equivalents is not precluded.

Finally, Octane argues that the doctrine of "vitiation" precludes any infringement under the doctrine of equivalents. (O.Bf. 31-33). Under the "all- elements rule," a patentee may not assert "a theory of equivalence" that "would *entirely vitiate* a particular claim element." *Warner-Jenkinson*, 550 U.S. at 39 n.8 (emphasis added). Here, ICON's theory of equivalence does not "entirely vitiate" the "linear reciprocating displacement" element. Rather, it merely asserts that slightly arcuate motion is equivalent to linear motion. The doctrine of claim

vitiation does not apply in a case like this where there is merely "a 'subtle difference in degree.'" *DePuy Spine, Inc. v. Medtronic Sofamor Danek, Inc.*, 469 F.3d 1005, 1017 (Fed. Cir. 2006) (quoting *Freedman Seating Co. v. American Seating Co.*, 420 F.3d 1350, 1361 (Fed. Cir. 2005)) (holding that there was no "vitiation").

In summary, none of Octane's legally erroneous arguments preclude ICON from asserting that a function involving slightly arcuate displacement is equivalent to a function involving linear displacement. There is at least a genuine issue that the "connecting" function is performed either literally or by equivalents.

III. There Is Literal Infringement Because Octane's Machines Have A § 112, ¶ 6 Equivalent Of The Disclosed "Connecting" Structure

A. Under The Proper Analysis, There Is At Least A Genuine Issue As To Whether Octane's Machines Have A § 112, ¶ 6 Equivalent

Octane next argues that there is no infringement because "Octane's machines do not include a pin, flared head, and C-channel mechanism." (O.Bf. 1, 13, 22-24). This argument is an assertion that Octane's machines do not meet the *structural* requirements associated with the "means for connecting" means-plus- function element in claim 1.

Octane's argument is premised on an incorrect view of the law. Under 35 U.S.C. § 112, ¶ 6, a means-plus-function

element "shall be construed to cover the corresponding structure...described in the specification and equivalents thereof." In its claim construction order, the Court identified "the corresponding structure...described in the specification" as the combination of pin 76, nut 78, flared head 82, C-shaped channel 84, axle 92, crank arms 98 and 100, nuts 94 and 96, pins 104 and 105, collars 106 and 107, spot welds, and nuts/washers. (Dkt. 144, pp. 10-14). The fact that Octane's machines may not have "a pin, flared head, and C-channel mechanism" (O.Bf. 1, 13, 23) does not preclude infringement for two reasons.

First, that fact does not preclude infringement because the means-plus-function element must be construed to cover "the corresponding structure... described in the specification *and equivalents thereof.*" 35 U.S.C. § 112, ¶ 6. When an accused device has an "equivalent" of the "corresponding structure," it is considered to be "literal infringement," not infringement under "the doctrine of equivalents." *IMS Technology, Inc. v. Haas Automation, Inc.*, 206 F.3d 1422, 1437 n.4 (Fed. Cir. 2000) ("[I]nfringement by equivalent structure in patent law under § 112, ¶ 6 is considered to be literal infringement."). The statute expressly places "equivalents" of the "corresponding structure" within the literal scope of the claim.

Second, at one point in its brief, Octane seems to realize that this portion of the statute exists, and supplements its argument with the assertion that "there is no reasonable argument that Octane's machines employ any structure that is *equivalent to [the] C-channel structure.*" (O.Bf.

23 (emphasis added)). But this supplemental argument, as with so many of Octane's arguments, is also based on an incorrect view of the law. The argument presumes that there must be an "equivalent" for the "C-channel structure." However, the Federal Circuit has made clear that "[t]he individual components...of an overall structure that corresponds to the claimed function are not claim limitations." *Odetics, Inc. v. Storage Technology Corp.*, 185 F.3d 1259, 1268 (Fed. Cir. 1999). "Rather, the claim limitation is the overall structure corresponding to the claimed function. That is why structures with different numbers of parts may still be equivalent under § 112, ¶ 6...." *Id.* Thus, the claim does not require an equivalent of a C-channel structure. All that it requires is an equivalent of the *combination* of the totality of the structures identified by the Court. The law does not permit Octane to draw special attention to the C-channel structure alone.[8]

Odetics shows how this mode of analysis can make a difference. In *Odetics*, the "corresponding structure" disclosed in the specification for performing the function consisted of a set of bins, a rod, and a gear. *Id.* at 1264-65. The structure in the accused system performed the function using a set of bins, a rod, and pins. *Id.* at 1265. The district court believed that a finding of infringement

---

8. ICON respectfully believes that the Court erred in its identification of the "corresponding structure" for the reasons set forth in its claim construction papers. Of course, if ICON's proposed identification of the "corresponding structure" is later found to be correct, then that is an additional reason to reject Octane's motion for summary judgment.

"require[d] 'component by component' equivalence between the relevant structure identified in the patent and the portion of the accused device asserted to be structurally equivalent." *Id.* at 1266. As a result, the district court concluded that there was no infringement because there was no "equivalent" for the gear. *Id.* at 1268. The Federal Circuit reversed the district court, holding that "the component-by-component analysis used by the district court finds no support in the law" and that "deconstruction or parsing [of the 'corresponding structure'] is incorrect." *Id.* For the same reason, Octane's component-by-component analysis "finds no support in the law" and its insistence that there be an "equivalent to [the] C-channel structure" is an improper "deconstruction or parsing" of the corresponding structure.

Under the proper mode of analysis, Dr. Rasty has concluded that the totality of the structure performing the "connecting" function (or an equivalent function) in the Octane machines is equivalent to the totality of the "corresponding structure" identified in the Court's claim construction order.

Specifically, Dr. Rasty has testified that "the entirety of the corresponding structure identified by Octane (i.e., flared head / C-channel, etc.), when viewed as a whole, is equivalent to the entirety of the analogous structures in the Q45 and Q47 devices." (Exh. 1, Rasty Decl., p. 13). Then he draws a correlation between the stability links of the Octane devices and the flared head / C-channel disclosed in the '710 patent (Dr. Rasty's common name for these structures is "Lateral Restraining Structure").

Dr. Rasty noted that they perform the same or equivalent function (limiting later movement of the stroke rails) in substantially the same way (via rigid metal constraints) to achieve substantially the same result (the first ends of the stroke rails are guided through reciprocating transverse motion while unwanted lateral motion is restricted). *Id.*

Assuming, for argument's sake, that Mr. Lenz had used a proper analysis and still disagreed with Dr. Rasty, that would not justify summary judgment against ICON; it would merely serve to illustrate that there is a genuine dispute on this factual issue. The issue of equivalence under § 112, ¶ 6 is a question of fact. *Odetics, Inc. v. Storage Technology Corp.*, 185 F.3d 1268 (Fed. Cir. 1999).

B. Octane's Legal Arguments Against § 112, ¶ 6 Equivalence Are Flawed

Although they are couched in terms of arguments against the "doctrine of equivalents," Octane offers several arguments that appear to offer a challenge on legal bases to a finding of equivalence under § 112, ¶ 6. First, Octane asserts that the "connecting" structure used in its machines is in "the prior art" and argues that this should preclude a finding of equivalence. (O.Bf. 27-31). Once again, that argument is based on a flawed view of the law. The law is clear that § 112, ¶ 6 equivalents can be in the prior art. *Intel Corp. v. United States Int'l Trade Comm'n*, 946 F.2d 821, 843 (Fed. Cir. 1991); *Applied Medical Resources Corp. v. United States Surgical Corp.*, 147 F.3d 1374, 1381 (Fed. Cir. 1998).

Octane also argues that ICON is precluded from a finding of equivalence under § 112, ¶ 6 because it asserts that "[t]he basic structure of the Octane linkage...is not an 'after-developed' technology." (O.Bf. 29). Octane argues that ICON "should have included that structure in its original patent filing" and should not "get two bites at the apple." (O.Bf. 28-29). Of course, even if Octane's linkage is in the prior art, the law does not limit ICON to the structure in its specification, but allows the claims to also cover "equivalents thereof." 35 U.S.C. § 112, ¶ 6. Thus, ICON is entitled to at least one "bite at the apple" to demonstrate equivalence. It must be remembered that "[t]he law 'does not require that an applicant describe in his specification every conceivable and possible future embodiment of his invention.'" *SuperGuide Corp. v. DirecTV Enterprises, Inc.*, 358 F.3d 870, 880 (Fed. Cir. 2004) (quoting *SRI Int'l v. Matsushita Electric Corp.*, 775 F.2d 1107, 1121 (Fed. Cir. 1985) (en banc)).

Finally, Octane appears to argue that the doctrine of "vitiation" precludes a finding of § 112, ¶ 6 equivalence. (O.Bf. 32-33). The doctrine of "vitiation" is only applicable to infringement under the doctrine of equivalents, not equivalence of structure under § 112, ¶6. Octane has pointed to no authority to the contrary.

IV. There Is Literal Infringement Because Octane's Machines Have A § 112, ¶ 6 Equivalent Of The Disclosed "Selectively Varying" Structure

Octane's last argument is there is no infringement because "Octane's machines do not include an 'adjustment

arm' and 'rod.'" (O.Bf. 1, 13-14, 24, 40). This argument is an assertion that Octane's machines do not meet the structural requirements associated with the "means for selectively varying" means-plus-function element in claim 1.

Octane's argument with respect to the "selectively varying" structure suffers from the same problems as its argument with respect to the "connecting" structure. In contravention of the statute, Octane asks the Court to ignore the fact that the statute requires the claim to be construed to cover "equivalents" of the "corresponding structure...disclosed in the specification." And Octane also seeks to contravene the rule set forth in *Odetics* that precludes a component-by-component analysis for purposes of analyzing equivalence. Octane wishes the Court to focus solely on whether the Octane device has "an adjustment arm" and "rod," whereas the proper analysis requires the Court to analyze whether the Octane device has an "equivalent" to the combination of the totality of structures identified as "corresponding structure" on pages 17-18 of the Court's claim construction order. That combination includes "an adjustment arm" and a "rod," but it also includes a number of other structures, and *Odetics* makes clear that it is improper to impute special significance to the adjustment arm or rod.

Under a proper mode of analysis, Dr. Rasty has concluded that the totality of the structure performing the "selectively varying" function in the Octane machines is equivalent to the totality of the "corresponding structure" identified in the Court's claim construction

order. More specifically, Dr. Rasty testified that the Q45 and Q57 machines have equivalents to the "motorized adjustment arm embodiment." (Exh. 1, Rasty Decl., p. 14). The accused devices' power or lead screws that, like the motorized adjustment arm disclosed in the '710 patent, function to vary the size of the substantially elliptical path traveled by the second end of the stroke rail. *Id.* Both mechanisms accomplish this function in substantially the same way: by transforming rotary motion of an electric motor to transverse motion: "The gear of the rack and pinion traverses the teeth of the associated bar in a very similar way that the nut of a power screw traverses the treads of the associated screw." *Id.* Both achieve substantially the same result: "these mechanisms increase/decrease the effective distance between two pivot points which in turn varies the size of the substantially elliptical path." *Id.* Dr. Rasty also testified that these structures are known to be interchangeable.

Assuming for argument's sake that Octane's expert had used a proper analysis and still disagreed, that would not justify summary judgment against ICON; it would merely serve to illustrate that there is a genuine dispute on this factual issue.

V. Summary of Disputed Facts

Octane has not identified a specific set of undisputed facts. ICON submits that Octane has not done this because it cannot, not without emphasizing the long litany of facts that are in dispute. Below, ICON has extracted just

some of the contentions from the "Factual Background" of Octane's opening brief and explained how they are disputed and/or irrelevant. It must be remembered that on summary judgment, all facts must be viewed in a light most favorable to ICON.

A. Octane's Factual Contentions about the Structure of the Accused Devices

1. With respect to the "stroke rail" limitation, Octane contends that "[t]here is no part of Octane's linkage that extends from a foot rail to the frame . . . ." (O.Bf. 10).

Disputed:

- Octane has admitted that its Q47 machine has a "stroke rail." (Exh. 1, Defendant Octane Fitness' Claim Chart ("Octane's First Claim Chart") at p. 2). In its Supplemental Claim Chart ("Octane's Supp. Claim Chart"), Octane changed its position somewhat, asserting that the Q47 does not have "a stroke rail that is attached to a collar." Octane has never withdrawn its admission that the Q47 has a "stroke rail" and has never before asserted that there is no part that extends from a foot rail to the frame. (Exh. 2, Octane's Supp. Claim Chart at p. 2).

- Octane's technical expert, Mr. Lenz, does not dispute that the Q47 machine includes a stroke rail. Mr. Lenz contends that the Q45 machine does not have a stroke rail that is "hingedly attached" to the

foot rail but does not contend that the stroke rail limitation is absent in the Q47 machine. (Exh. 7, Rebuttal Expert Report of Steven M. Lenz (Non-Infringement) ("Lenz report") at pp. 4 and 17).

- Remarkably, Octane's technical expert has never submitted a report relying upon Octane's construction of "stroke rail" as a basis for non-infringement at all. Instead, for the Q45 machine, Octane's expert relies upon the requirement that the stroke rail be "hingedly attached" to the foot rail and, for the Q47 machine, does not even mention the "stroke rail" limitation. Therefore, other than attorney argument, Octane has no evidence that "[t]here is no part of Octane's linkage that extends from a foot rail to the frame." (See O.Bf. 10 – 11). Moreover, Octane's own technical expert never even inspected the internal workings of actual Q45 or Q47 machines in connection with developing his opinions in this case or before he submitted his expert reports. (Exh. 8, Deposition of Steven Lenz ("Lenz depo.") 51:19 – 52:18).

- Based on extensive testing, analysis (including personal inspection, use, evaluation, and computer modeling of the Q45 and Q47 machines), ICON's technical expert, Dr. Rasty, has testified that both the Q47 and Q45 Machines have stroke rails under Octane's construction, either literally or under the doctrine of equivalents. (Exh. 1, Rasty Decl., pp. 5 and 7; Exh. 2, Rasty Decl., Addendum to Expert Report of Jahan Rasty, Ph.D. ("Addendum to Rasty

report")). More specifically, Dr. Rasty has applied Octane's claim construction and expressly testified that the "3P Actuator Links" of the Q45 and "3P Link Assemblies" of the Q47 extend from the foot rail to the frame. *Id.*, 2.

2. **"Reviewing both the Q45 and Q47 . . . , the only part on both machines that could remotely be deemed a 'stroke rail' is the actuator casting." (O.Bf. 10).**

Disputed:

- The Court's claim construction order expressly states that its construction "encompasses both a unitary stroke rail and an adjustable stroke rail." (Dkt. 144, p. 8).

- ICON's technical expert has testified that the "3P Actuator Links" and the "3P Link Assemblies" of the Q45 and Q47 qualify as "stroke rails" under Octane's construction, either literally or under the doctrine of equivalents. (Exh. 1, Rasty Decl., p. 16, and Exh. 2, Rasty Decl., Addendum to Rasty report, pp. 1-2).

- Octane itself groups the combination of elements comprising the "3P Actuator Links" and the "3P Link Assemblies" as a single component comprised of multiple parts. Octane's own engineering drawings are just one example: OCTANE000339 (3P Link Assembly (Q47)) and OCTANE 021175 (3P Actuator Link (Q45)).

Appendix P

[

REDACTED

]

3. **"[I]n the Q45 . . . , the "second end" of the actuator casting is not hingedly connected to the foot rail." (O.Bf. 10).**

Disputed:

- ICON's technical expert has testified that the "3P Actuator Links" of the Q45 qualify as "stroke

rails" under Octane's construction, either literally or under the doctrine of equivalents, and that these "stroke rails" are hingedly attached to the foot rail. (Exh. 1, Rasty Decl., p. 7, Exh. 2, Rasty Decl., Addendum to Rasty report p. 2).

4. **"Icon's linkage employs the single bar stroke rail . . . ." (O.Bf. 11). "Icon's patented design connects a unitary stroke rail between a foot rail and a frame." (O.Bf. 36).**

Disputed:

- The '710 patent discloses both unitary and multipart stroke rails. (Exh. 3, '710 patent, 6:3-67, Figs 1, 5-6).

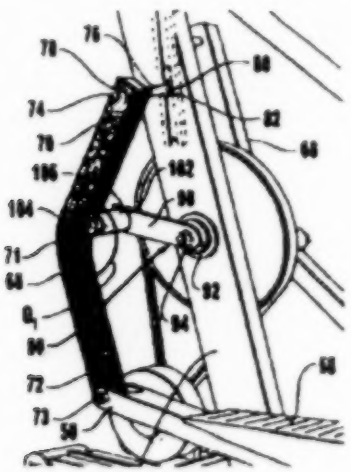

Unitary Stroke Rail, Fig. 1

Appendix P

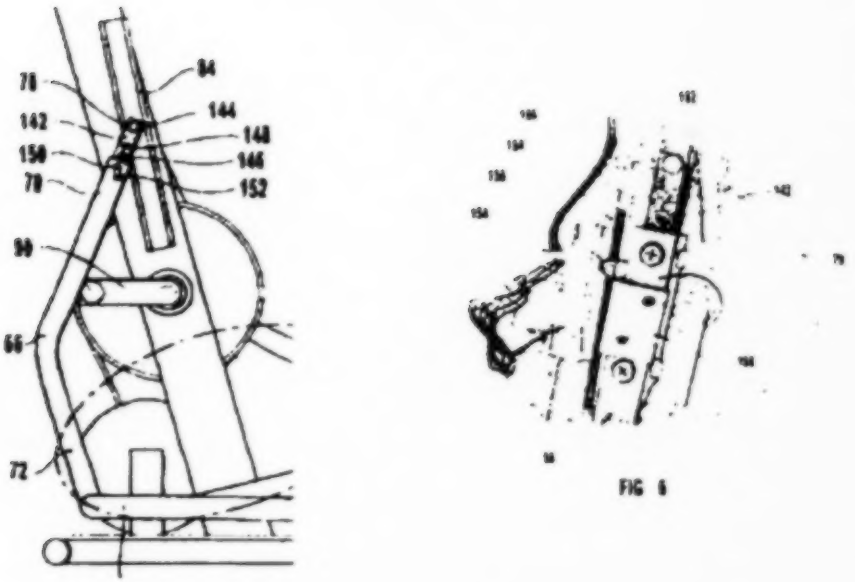

Multipart Stroke Rails, Figs. 5 and 6

- Dr. Rasty has confirmed the presence of this disclosure in the '710 patent. (Exh. 2, Rasty Decl., Addendum, 1 ("[T]he '710 patent discloses stroke rails comprised of both single or multiple parts. These multi-part stroke rails are shown generally at Figures 5, 6 of the '710 patent and the portions of the specification describing them.")).

- The Court's claim construction order expressly states that its construction "encompasses both a unitary stroke rail and an adjustable stroke rail." (Dkt. 144, p. 8).

5. **"[E]ven if Icon attempts to contend that the actuator casting is the stroke rail, it is not connected to the frame . . ." (O.Bf. 13).**

Disputed:

- Even assuming Octane's improper contention that the actuator casting of the accused product is the only thing that can qualify as a "stroke rail," Dr. Rasty has testified that the actuator casting is connected to the frame in two ways: via the crank arm and via the rocker link. (Exh. 1, Rasty Decl., p. 16). These connections are circled in red in the photographs below:

Q45

Q47

- Octane's technical expert does not dispute that there is a connection between the actuator castings of the accused devices and their respective crank arms; instead he disagrees with Dr. Rasty about the "equivalence" of the structure that provides that connection to the frame. (Exh. 7, Lenz Report, 5 – 9, 19 – 22).

6. **"Octane's machine does not use any part that could be remotely considered an adjustment arm, nor does it have any part that could be considered a connecting rod. These components are missing from Octane's Q45 and Q47 machines."(O.Br. 14).**

Irrelevant:

- This assertion is legally irrelevant for two reasons. First, the law is clear that the literal scope of the claim includes "equivalents" of the "corresponding structure." The claim is not limited to a structure that includes an adjustment arm or a connecting rod. 35 U.S.C. § 112, ¶ 6. Second, "[t]he individual components...of an overall structure that corresponds to the claimed function are not claim limitations." *Odetics, Inc. v. Storage Technology Corp.*, 185 F.3d 1259, 1268 (Fed. Cir. 1999). "Rather, the claim limitation is the overall structure corresponding to the claimed function." *Id.* In other words, there is no requirement even for an equivalent of an adjustment arm, only for an equivalent of the overall structure corresponding

to the claimed function. Therefore, even if Octane's statement is true, it is irrelevant.

- The Octane employee that actually designed the Q45 machine (Joseph Halfen) testified that the power screw mechanism of the Octane devices is interchangeable with a gear system that climbs up and down a strip of teeth (rack and pinion). (Exh. 9, Halfen depo., 29:9 – 31:18). This is evidence of equivalence between the two overall structures.

- Dr. Rasty has testified that the "power screw or lead screw" mechanism of the Q45 and Q47 devices performs the claimed function in substantially the same to achieve substantially the same result as the "rack and pinion" mechanism, including the adjustment arm and rod, disclosed in the patent. (Exh. 1, Rasty Decl., p. 14). This is evidence of equivalence between the two overall structures.

- Mr. Lenz testified that a rack and pinion mechanism and a linear actuator (power screw or lead screw) accomplish the same function in the same way (electric motors) to accomplish the same purpose (mechanical adjustment) in an exercise device. (Exh. 8, Lenz Depo., 152:24 – 153:23; 154:24 – 155:10). This is evidence of equivalence between the two overall structures.

Appendix P

B. Octane's Factual Contentions about "Advantages" of the Accused Devices

7. "The significant disadvantage of [a tube-in-tube arrangement] is that, to obtain an equivalent length of the ellipse that a user's feet travels, as compared to Octane machines, the adjustment arm 142 would have to come so far out of the stroke rail that the size of the front of the machine, (the "operating envelope") would be 58 inches (or almost 5 feet tall)." (O.Bf. 16). By comparison the operating envelope for both Octane machines is about 32 inches, or almost half the size. The difference is, not surprising, an important factor in the commercial appeal of an elliptical machine." *Id.*

Disputed:

- Octane has no credible evidence to support its factual contentions concerning its "operating envelope" arguments. As support, Octane cites to Mr. Lenz's expert report. However, during Mr. Lenz's deposition it was revealed that he did not have anything to do with the "operating envelope" argument at all. Mr. Lenz did not take any of the measurements included in this argument; they were derived from Defendant Octane's own employees. Mr. Lenz doesn't even know who at Octane did the measurements or from what figure of the '710 patent they were extrapolated. (Exh. 8, Lenz depo, 139:7-18; 141:8-13). Even though he could

have, Mr. Lenz has never checked the accuracy of Octane's measurements and analysis. *Id.* at 140:14-17. Likewise, with respect to measurement of the Octane devices, Mr. Lenz does not know from what source the data was collected or by whom. *Id.* at 141:19-142:16. Moreover, Mr. Lenz never saw the working models of the analysis, if any, that Octane's employees performed. *Id.* at 43:8-14, 20-24. Although he was capable of conducting his own analysis, Mr. Lenz simply accepted PDF images of Octane's own "analysis" to incorporate into his report. *Id.* at 145:22 – 147:10.

- To the extent Octane's technical expert knows anything about how the "operating envelope" data was derived, he understands that they are based on several assumptions, including (1) that someone had to make an educated estimate of the dimensions of one part in the patent drawings and (2) that the patent drawing are to scale. (Exh. 8, Lenz depo. 138:10- 17; 166:8-18). Notwithstanding these assumptions, Mr. Lenz testified that if the artist that created the patent figures made one dimension larger for illustrative purposes that would throw it off scale. He also testified that he did not know if that was the case for the '710 patent or not, and that no specific dimensions were called out in the '710 patent. *Id.* at 169:9-18, 50:10-14. Case law makes clear that patent drawings should not be assumed to be drawn to scale unless the patent says they are. *Hockerson-Halberstadt, Inc. v. Avia Group Intern., Inc.*, 222 F.3d 951,

956 (Fed Cir. 2000) ("Under our precedent . . . it is well established that patent drawing do not define precise proportions of the element and may not be relied upon to show particular sizes if the specification is completely silent on the issue."). There is no indication in the '710 patent that the figures were precisely drawn to a particular or consistent scale.

- The drawings of the '710 patent are not intended to illustrate a commercial embodiment of the patented invention. To the contrary, they are directed to the roughest form of a prototype, what Mr. Lenz described as a "proof of concept" prototype. (Exh. 8, Lenz depo., 47:8-24).

8. **"Other disadvantages of the tube-with-a-tube design include: (1) the tubes must be precisely engineered, as an overly tight fit would cause the parts to bind, while an overly loose fit would cause them to vibrate relative to each other; and (2) when the adjustment arm is fully extended out of the stroke rail, the operating forces will work to cause bending of the adjustment arm. These issues cause a lack of smoothness and feel to the operator, significantly increased manufacturing and engineering costs, higher incidence of part failure, undesirable noise, and a much larger machine than is marketable." (O.Bf. 16).**

Appendix P

Disputed:

- The inventor of the '710 patent, Bill Dalebout, testified that the tube-with-a-tube mechanism disclosed in the '710 patent would not be subject to slop if the design included proper controls and that, in fact, a prototype of the '710 patent was created with sufficiently tight tolerances to avoid these problems. (Exh. 10, Dalebout depo, 72:6-22).

- Octane has not presented credible evidence to support its contention. In support of this position, Octane again relies on its technical expert, Mr. Lenz. Mr. Lenz, however, did not conduct any testing or other analysis to arrive at this opinion. His opinion is based on his "general knowledge in the industry." He could not cite to a publication or any other source to confirm this general knowledge in the industry. (Exh. 8, Lenz depo, 229:1-24).

9. **[T]he Q45 makes use of an integrated screw on the motor to change the shape of the elliptical path. Attaching the foot rail to this screw, so that the end of the foot rail rides up and down the screw, eliminates the need to change the length of a "stroke rail." (O.Bf. 17).**

Disputed:

- This contention assumes that the "actuator casting" is the only structure that qualifies as a "stroke rail," and that only a unitary stroke rail can

qualify as a "stroke rail." As demonstrated above, both of those contentions are incorrect.

• Dr. Rasty has testified that the integrated screw mechanism of the Q45 performs the same function as the disclosed adjustment mechanism of the '710 patent in the same way to achieve the same result. (Exh. 1, Rasty Decl., p. 16).

10. **"[T]he disadvantages of [C-channel] structure include: (1) up and down reciprocation of the flared head significantly increases the operating envelope of the elliptical of the "710 patent (58 inches for the '710 patent versus 32 inches for the Q45/Q47); (2) the flared head must be precisely manufactured to ensure that it fits comfortably within the channel so that it does not bind and wear excessively due to an overly tight fit, or create excessive noise and wear do to an overly loose fit; (3) the pin 76 must be long in this design, which can cause the stroke rail to twist and/or the roller to skew within the C-channel. (O.Br. 18-19).**

Disputed:

• The inventor of the '710 patent, Bill Dalebout, testified that the disclosed design would not and did not suffer from these disadvantages, primarily because the C-channel structure served only as a guide for the end of the stroke rail and, as such did not involve a significant load. The primary load is

placed where stroke rail attaches to the frame at the crank arm. (Exh. 10, Dalebout depo. 56:22- 58:22).

11 ."[A] central principal of operation for the '710 patented design is the use of a C-channel for connecting a first end of a stroke rail to produce a linear movement." (O.Bf. 36).

Disputed:

- Octane cites no evidence for this proposition nor does it explain what is meant by "central principal of operation." (O.Bf. 36).

- The inventor of the '710 patent testified that the thrust of his invention was to provide a front-mech elliptical exercise device with an adjustable stride, not to use a C-channel. (Exh. 10, Dalebout depo., 31:10 – 32:20).

C. **Irrelevant Factual Allegations that Nonetheless Warrant A Response**

12 ."In general [] Icon focuses its business on lower end markets, where exercise equipment is sold for less than $1,000." (O.Bf. 5).

Disputed:

- ICON sells products in markets ranging from mass-retailers/discounters to commercial fitness equipment. (Exh. 11, Logan depo. 31:9-24).

Appendix P

13 ."Icon also markets a high-end elliptical brand but has only acquired an insubstantial market share in the high end market." (O.Br. 5-6).

Disputed:

- This statement is a gross mischaracterization of an ICON witness's testimony:

[

REDACTED

]

(Exh. 11, Logan depo., 188:5-8).

14 .[REDACTED

] In short, ICON could sell the machine disclosed in the '710, thereby offering its customers a front drive machine with the means to selectively vary the elliptical path and cease its 6% royalty payment to a competitor, but has not has not done so. (O.Br. 7-8).

Disputed:

- Octane has put forth no evidence to indicate that ICON pays [REDACTED]

[REDACTED] In fact, the evidence cited by Octane for this proposition (Exh. 12, Smith Depo., 187:16-188:11) does not even refer to [REDACTED]. The cited testimony refers to a [REDACTED] and has nothing to do with [REDACTED] or front-mech elliptical machines. (Exh. 12, Smith Depo, 187:16-188:11). Further, even if Octane had presented evidence that ICON pays [REDACTED] it does not follow that if ICON "sold the machine disclosed in the '710" ICON could "cease its [REDACTED] It is black letter law that practicing one patent does not preclude practicing another.

15. **"[O]ne of the inventors or the '710 patent, (an Icon executive), Bill Dalebout testified about problems with production of a product under the '710 patent, such as how complicated, how many parts, how difficult to manufacture, and how costly it would be." (O.Bf. 19).**

Disputed:

- ICON did not build a commercial embodiment of the '710 patent at the time of its inventions because "the sales department and the management of the company has concluded that the offerings that they have in the marketplace to date are sufficient." (Exh. 10, Dalebout Depo. 84:1-8).

16. **"[T]he '710 design is not commercially viable . . . ." (O.Bf. 35). "Icon's executive, Bill Dalebout, admits that that Icon's linkage system is not commercially viable." (O.Bf. 36).**

Disputed:

- Again, Octane grossly mischaracterizes the testimony of an ICON witness. Mr. Dalebout never testified that the '710 patent was not commercially viable. To the contrary Mr. Dalebout expressly testified that he believes it is commercially viable. (Exh. 10, Dalebout Depo. 81:13-22).

Appendix P

CONCLUSION

For all of the foregoing reasons, Octane's motion for summary judgment should be denied. Octane relies on flawed legal reasoning and asks the Court to ignore numerous genuine issues of material fact. Summary judgment of non- infringement is not appropriate.

DATED this 8th day of March, 2011.

By: /s/ C.J. Veverka
David R. Wright, UT Bar No. 5164
dwright@wnlaw.com
C. J. Veverka, UT Bar No. 7110
cveverka@wnlaw.com
H. Craig Hall, UT Bar No. 8691
chall@wnlaw.com
WORKMAN NYDEGGER
1000 Eagle Gate Tower
60 East South Temple
Salt Lake City, UT 84111

Lawrence M. Shapiro, P.A., Reg. No. 130886
lshapiro@gr-espel.com
Jeanette M. Bazis, Reg. No. 255646
jbazis@greeneespel.com
GREENE ESPEL, PLLP
200 South 6th Street, Suite 1200
Minneapolis, MN 55402-1415

Attorneys for Plaintiff
ICON HEALTH & FITNESS, INC.

APPENDIX Q — OCTANE'S MEMORANDUM IN SUPPORT OF ITS MOTION FOR ATTORNEY FEES AND COSTS, DATED JULY 18, 2011

IN THE UNITED STATES DISTRICT COURT
FOR THE DISTRICT OF MINNESOTA
FOURTH DIVISION

Case No.: 0:09-cv-00319 (ADM/SRN)

ICON HEALTH & FITNESS, INC.,
a Delaware Corporation,

Plaintiff,

vs.

OCTANE FITNESS, LLC, a Minnesota
limited liability company,

Defendant.

DEFENDANT OCTANE FITNESS LLC'S MEMORANDUM IN SUPPORT OF ITS MOTION FOR ATTORNEY FEES AND COSTS

Rudolph A. Telscher
Matthew L. Cutler
HARNESS, DICKEY
& PIERCE, P.L.C.
7700 Bonhomme, Suite 400
St. Louis, MO 63105
(314) 726-7515
FAX: (314) 726-7516

Appendix Q

[TABLES INTENTIONALLY OMITTED]

I. INTRODUCTION

Patent infringement litigation is expensive. Though most companies are ethical and sue a competitor for patent infringement only when the company believes, in good faith, that that competitor is selling an infringing product, the system has the inherent risk for abuse. In these "exceptional" cases, where manifestly unreasonable claims are asserted as a competitive strategy, the award of fees and costs in a patent case is authorized. Here, the industry giant, Icon, tried to crush (the true effect of a patent lawsuit on a small company) Octane with a very expensive patent litigation (total spend over $1,500,000).

An internal Icon email chain is the starting point in showing why this case is exceptional and why fees should be awarded. Here, Octane did not copy Icon's commercially defunct "invention." To the contrary, Octane utilized an elliptical machine linkage system that was itself patented and *pre-dated* Icon's patent (a circumstance very much out of the norm for a patent case) to make two commercially successful elliptical machine lines referred to as the Q45 and Q47. In response to Octane achieving success with its Q45 and Q47 elliptical machines, Icon sent the following email (Exhibit 2):

From: Pat McGinnis
Sent: Sunday, August 24, 2008 7:53 PM
To: Jeff Kazan; Adam Wilk
Subject: FW: SNEWS News Update for August 22

We are suing Octane. Not only are we coming out with a great product to go after them, but throwing a lawsuit on top of that.

Pat McGinnis
Vice President of Global Sales
FreeMotion Fitness
direct 800.811.0549
cell 425.830.7997
fax 866.844.8288

Appendix Q

Icon was within its rights to come out with a product that it thought would compete with Octane's highly successful Q45 and Q47 elliptical machines. Its conduct in ***"throwing a lawsuit on top of that"*** involving an old, irrelevant patent by playing unreasonable word games is, however, an unreasonable (indeed outrageous) use of patent litigation. Two further Icon emails reflect this illegitimate motive:

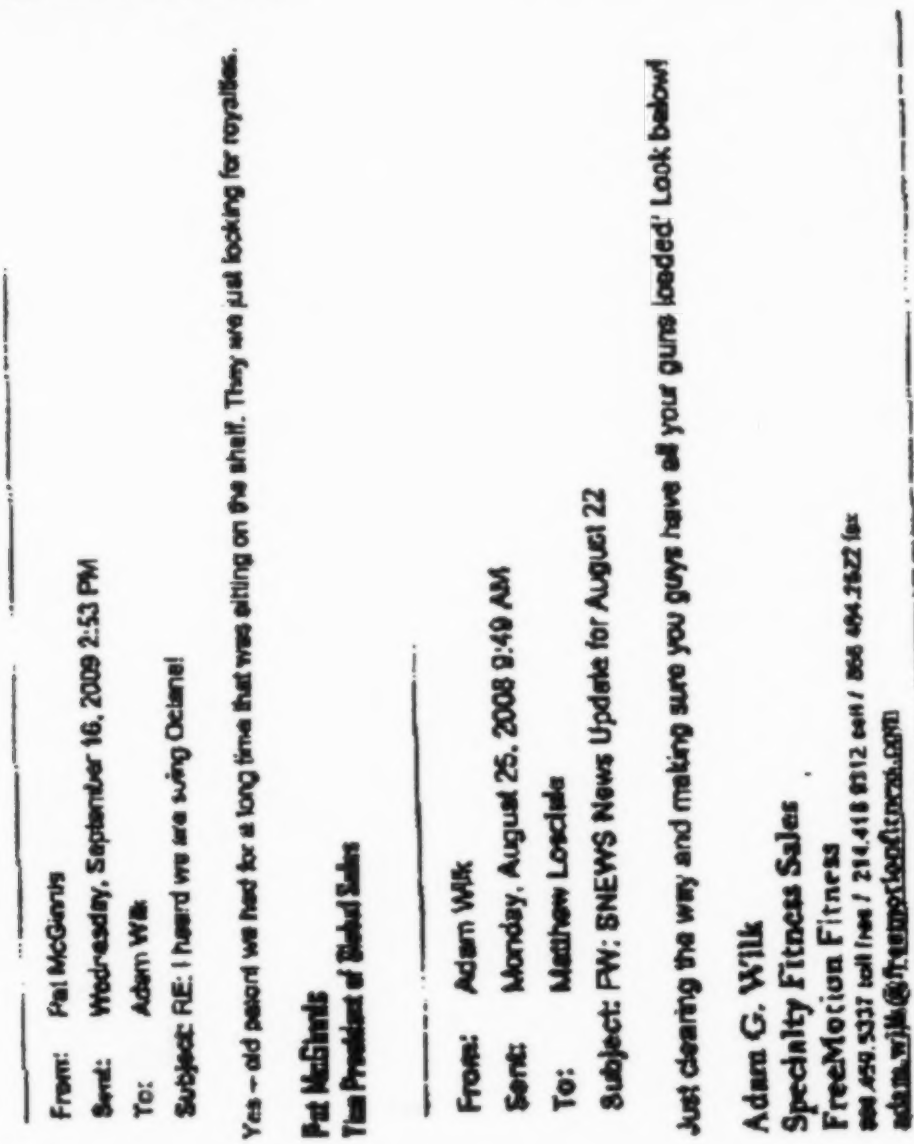

From: Pat McGinnis
Sent: Wednesday, September 16, 2009 2:53 PM
To: Adam Wilk
Subject: RE: I heard we are suing Octane!

Yes -- old patent we had for a long time that was sitting on the shelf. They are just looking for royalties.

Pat McGinnis
Vice President of Global Sales

From: Adam Wilk
Sent: Monday, August 25, 2008 9:49 AM
To: Matthew Loscialo
Subject: FW: SNEWS News Update for August 22

Just clearing the way and making sure you guys have all your guns loaded! Look below!

Adam G. Wilk
Specialty Fitness Sales
FreeMotion Fitness
[illegible]
[illegible]

Appendix Q

Icon's aggressive motive in using a lawsuit to deter ompetition by a smaller competitor is obvious in view f the foregoing. The facts of this case also reflect why he lawsuit was, at all times, objectively baseless and /hy pulling old patents off "the shelf" to hinder smaller ompetitors is not a legitimate use of patent litigation:

(1) **Icon did not invent the linkage system used by Octane for its successful elliptical machines.** Octane's elliptical linkage is covered by a patent, U.S. Patent No. 5,707,321, that *predates* Icon's '710 patent. Dkt. No. 157, § III.C.2.

(2) **A quick review of what is disclosed, shown, and claimed in Icon's '710 patent shows that it looks nothing like Octane's elliptical machine linkages.** Octane's linkages were *so* different that Octane was able to successfully prove that it did not literally infringe four distinct elements. Octane also proved, at the summary judgment phase (meaning no reasonable material fact disputes), that its elliptical machines did not infringe three of those elements under the doctrine of equivalents. ***If Icon's position as to just one of those elements*** is manifestly unreasonable, the litigation is manifestly unreasonable because Octane need only prove that one element of its elliptical machines is not met either literally or equivalently to avoid

infringement. Here, the issues are so lopsided that Octane successfully proved three distinct elements are not met both literally and equivalently.

(3) **Icon's patented design was, in fact, so different, elliptical machines of the sort described and claimed in the '710 patent were never commercially viable.** Dkt. No. 157, § II.B. Despite being a large elliptical machine company, Icon never sold an elliptical machine that used the linkage system disclosed in the patent.

(4) **Icon claimed infringement against the backdrop of a crowded patent field in the elliptical linkage area, where the patents are directed to specific, incremental improvements.** There is no dispute that Icon did not broadly invent under its '710 patent elliptical machines or linkage systems for elliptical machines. Dkt. No. 157, § II.C. Its invention was directed to having one end of a "stroke rail" (not a collection of parts) move in a straight line using a "C-channel configuration" to cause the other end of the stroke rail to move in an elliptical path. Octane did not use any linkage close to such an arrangement. *Compare* Dkt. No. 157, § II.C with § II.D.

For at least the above reasons, it was manifestly unreasonable for Icon to contend that a patent disclosing a commercially unfeasible product covered a commercially successful and very different competitor's product that was based on a design predating the patented design.

The sad reality is that this suit was designed as a competitive weapon. It was never a legitimate suit to protect intellectual property rights. No doubt, Icon thought that the smaller Octane would not have the financial wherewithal to withstand the litigation, and that Octane would be forced into a settlement wherein it would agree to pay royalties or withdraw completely from the market. It was a good old fashioned stick-up plain and simple. Only Octane's perseverance - and the fact that it had decided to purchase a patent defense insurance policy that covered a sizable portion of the costs of this litigation - prevented a gross injustice. Indeed, but for the fortuitous purchase of patent defense insurance, Icon's litigation strategy almost assuredly would have led to Octane being forced into paying a royalty or exiting the market – an outcome that the Court's recent summary judgment order makes clear would not have been a warranted outcome.

For these reasons and the reasons stated herein, Octane requests the Court to award it attorney fees and costs. Octane stands ready to make a full fee submission should the Court grant its request.

Appendix Q

II. BACKGROUND[1]

This case was initially filed in California by Icon (a Utah company) in April 2008 against Octane (a Minnesota company) and one of Octane's small California distributors/ retailers. Octane successfully moved to sever and transfer the case to this district over Icon's opposition; the case officially reaching the Court's docket in February 2009. Dkt. No. 57. In the action, Icon alleged, *inter alia*, that defendant Octane infringed U.S. Patent No. 6,019,710 ("the '710 patent").[2]

Icon and the Commercially Defunct Elliptical Machine Claimed in the '710 Patent

Icon is the self-proclaimed "world's largest developer, manufacturer and marketer of fitness equipment." *See* www.iconfitness.com. Icon filed the application resulting in the '710 patent many years ago on January 6, 1998. The '710 patent, entitled "Exercising Device with Elliptical

---

1. Though the Court is no doubt aware of many of the background facts set forth below, for completeness and by way of a refresher for the Court, Octane provides the following background of the case with references to the recent Summary Judgment briefing and exhibits.

2. Icon initially sued Octane on another patent, U.S. Patent No. 5,104,120 ("the '120 patent"), which Octane also did not infringe. Claims of infringement as to the '120 patent were equally baseless and following a Texas court ruling against Icon, and at Octane's demand, Icon was forced to withdraw its claims relating to the '120 patent. On May 29, 2009, based on a stipulation by the parties, this Court entered an order (Dkt. No. 78) dismissing all claims and counterclaims relating to the '120 patent.

Movement," describes and claims an elliptical exercise machine with a specific linkage system, including a means disclosed for varying the size of the elliptical path that a user's foot travels. Dkt. No. 158-1 at col. 2, ll. 22-58. ***Icon never commercialized the machine described and claimed in the '710 patent.*** Dkt. No. 158-2, Dalebout Dep. at 82:10-16; Dkt. No. 158-11 at 148:17-19; Dkt. No. 158-16, Gunderson Dep. at 54:13-15. Indeed, after developing the machine and showing it to Icon's customers, no customers expressed sufficient interest in purchasing that type of elliptical. Dkt. No. 158-2 at 26:20-31:4, 84:9-12. Instead, Icon sold a different front drive elliptical machine that it did not invent, paying a royalty to a competitor on those sales. Dkt. No. 158-15, Smith Dep. at 185:11-186:11.

Figure 1 (below) from the '710 patent (and labeled in the Summary Judgment briefing for the Court's convenience) illustrates the core features of the linkage system described and claimed in that patent. Icon's linkage system connects a "second end" 72 of a stroke rail 66 (*i.e.*, a unitary bar, either curved or straight) to a foot rail 50. The stroke rail extends to a "first end" 70. The first end is connected to the frame of the elliptical machine by, *inter alia*, a c-channel and pin/flared head arrangement (84 and 76 respectively). The pin 76 slides up and down in a straight or linear path within the c-channel.

Appendix Q

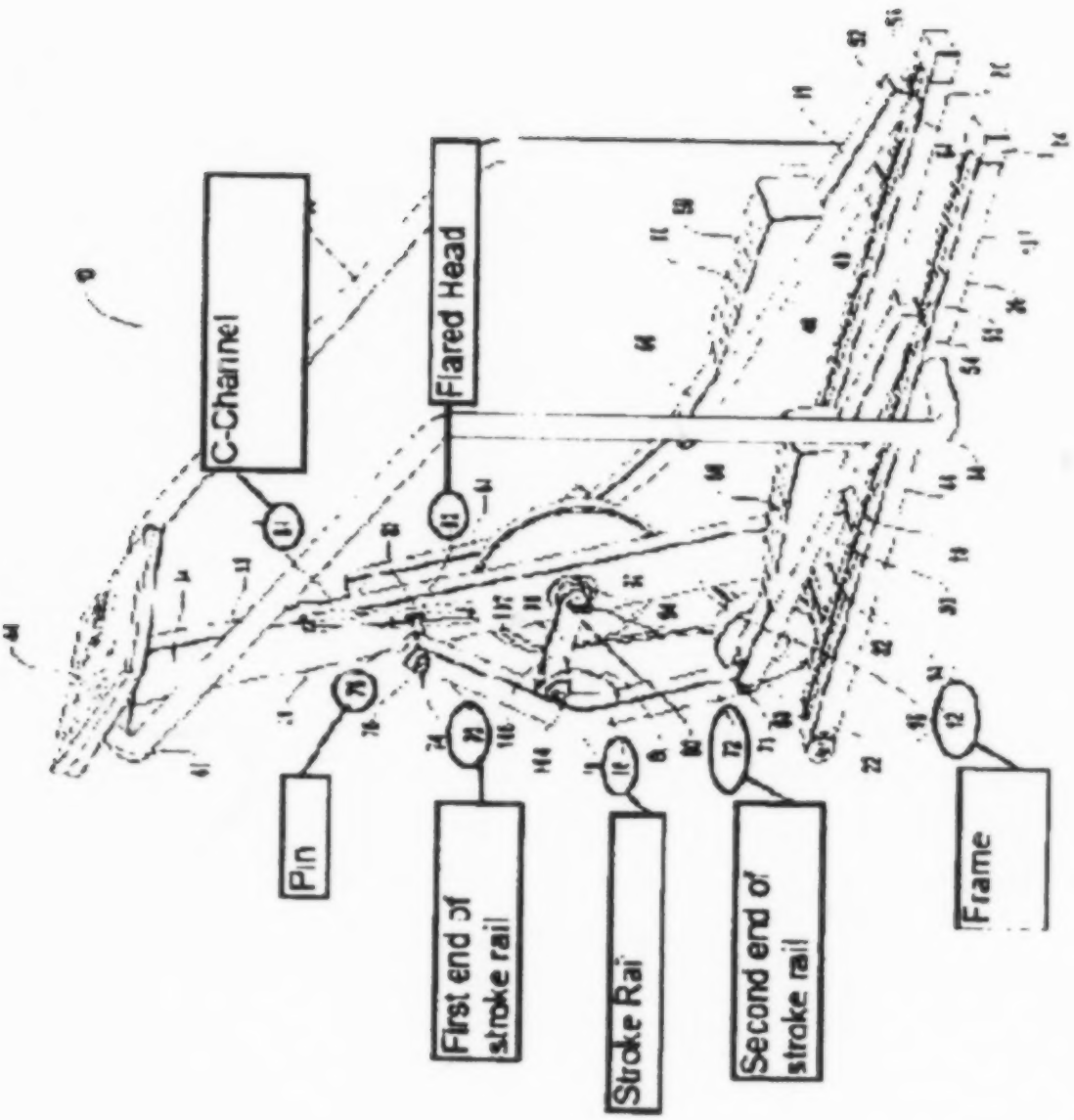
C-Channel
Flared Head
Pin
First end of stroke rail
Stroke Rail
Second end of stroke rail
Frame

This was the thrust of Icon's patent – one end of a stroke rail slides within a c-channel in straight line and the other end of the stroke rail moves the foot rails in an elliptical path.

Octane and Its Commercially-Successful Elliptical Machines

Octane is a Minneapolis company that was founded in 2004 by Tim Porth and Dennis Lee, two former executives from the large exercise fitness company, Life Fitness. Dkt. No. 158-9, Porth Dep. at 10:6-21; Dkt. No. 158-10, Lee Dep. at 6:15-20, 8:1-3. Sensing a void in the marketplace, both Mr. Porth and Mr. Lee had a vision of a company that focused solely on high-end elliptical exercise machines that are sold to fitness clubs, specialty fitness stores, and the like. Dkt. No. 158-9 at 53:2-54:1. At the outset of their business endeavor, Mr. Lee and Mr. Porth identified a specific linkage system that could form the basis of their elliptical machines and licensed that system from two prolific elliptical inventors, Ken Stearns and Joe Maresh. ***Joe Maresh had secured a patent on certain basics of the linkage system (U.S. Patent No. 5,707,321 ("the '321 patent")) that predated Icon's patent***. *Id.* at 34:9-36:14. Octane engineers then took the linkage system and developed Octane's lines of elliptical machines, including the Q45 and Q47 machines that were at issue in this case. *Id.* at 37:6-14. For three years in a row, Octane was rated as the best elliptical supplier in the industry by a third party industry publication. Dkt. No. 158-11 at 166:25-167:3; Dkt. No. 158-12.

Appendix Q

Octane's Q45 and Q47 machines enjoyed great success in the marketplace. Dkt. No. 158-13, McGinnis Dep. at 69:18-70:1. In addition to significant coverage in industry publications (Dkt. No. 158-12), at the time of the summary judgment briefing in this case, Octane had sold [REDACTED] Q45 machines since its introduction in August, 2004 and had sold over [REDACTED] Q47 machines since its introduction in 2007. Dkt. No. 158-14.

Other than being a front drive elliptical (which Icon did not invent) the commercially successful Q45 and Q47 elliptical machines are nothing like the commercially unsuccessful elliptical claimed in the '710 patent. The Q45 and Q47 elliptical machines are shown below.

Octane's Q45 Linkage System

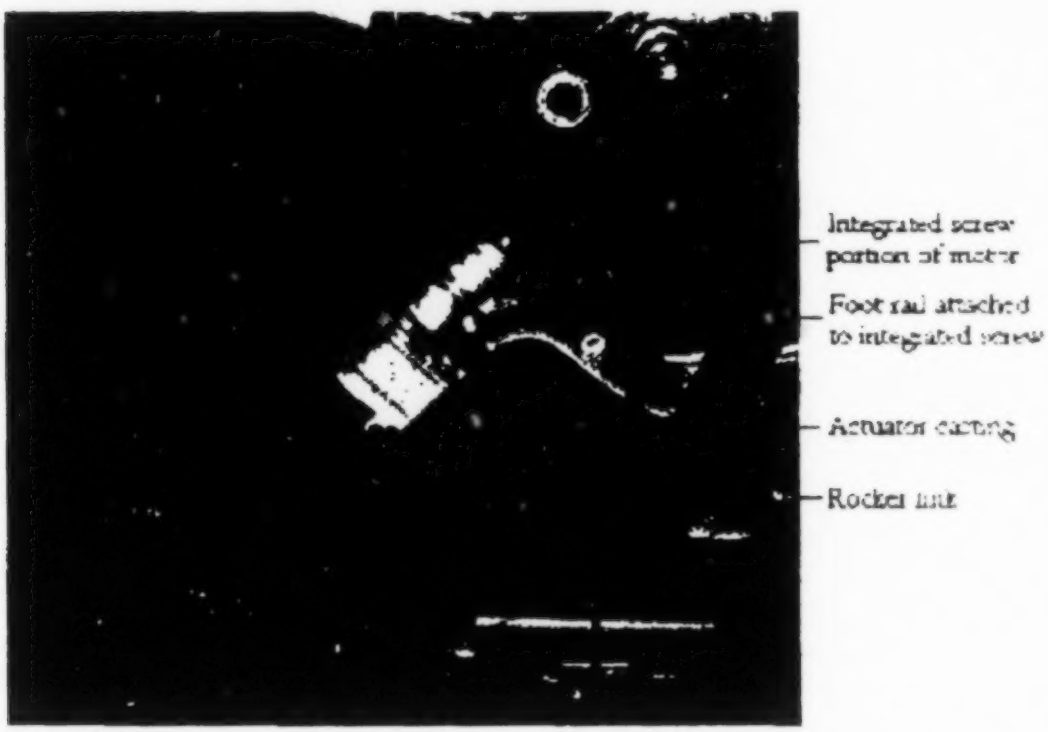

Appendix Q

Octane's Q47 Linkage System

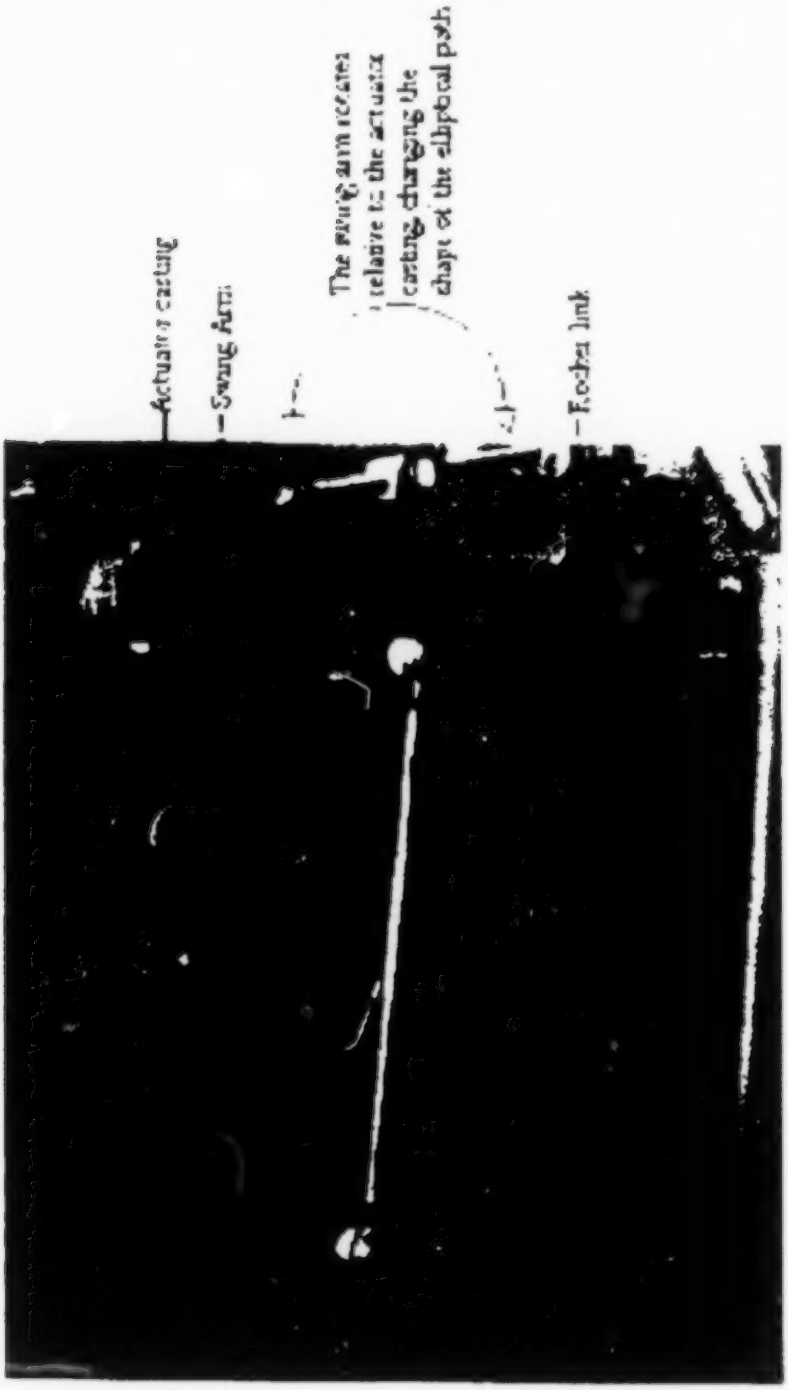

Appendix Q

As is clear from the diagrams above, the linkage of the Q45 and Q47 elliptical machines is very different from the linkage system of the '710 patent. Most obviously, and as found by this Court in the recent summary judgment ruling, the '710 patent requires that one end of a stroke rail slide within a c-channel in a straight or "linear" line while the other end of the stroke rail moves the foot rails in an elliptical path. Octane's elliptical machines do not employ a c-channel linkage structure (or anything close – requiring Icon to argue that the "rocker link" is somehow similar) and the stroke rail in those devices does not move along a straight or "linear" path (forcing Icon to ignore the main thrust of its invention and argue that curved paths are covered by its patent). Icon also had to assert that a "stroke rail" could include limitless parts – even though the patent only shows a unitary member (as the word "rail" connotes). In short, Octane's linkage bears no rationale resemblance to anything that Icon could reasonably claim it invented.

The Baseless Lawsuit and Icon's Reasons for Bringing It

Despite the readily apparent differences between Octane's elliptical machines and the elliptical machines disclosed and claimed in the '710 patent, Icon not only initiated the litigation, but also persisted in its baseless assertions all the way through discovery (both fact and expert), through a full *Markman* proceeding and ultimately through resolution by the Court on summary judgment more than three years later.

Appendix Q

Several documents produced in discovery are telling of Icon's motivation for these actions. First, in an email sent in August 2008, soon after the case was filed, Pat McGinnis, Icon's Vice President of Global Sales, wrote to other Icon employees suggesting that the lawsuit was a tool against a competitor: "We are suing Octane. Not only are we coming out with a great product to go after them, ***but throwing a lawsuit on top of that***". Ex. 2. Interestingly, at the time of his deposition in 2010, Mr. McGinnis could not think of what "great product" Icon came out with to compete with Octane, but the lawsuit proceeded on. Dkt. No. 158-13 at 70:8-14. The August 2008 email by Mr. McGinnis was forwarded on to a potential customer/ retailer named Matthew Losciale with a message from another Icon employee stating "***just clearing the way and making sure you guys have all your guns loaded!***" Ex. 2.

Further motivation for the suit can be gleaned from a later email. In an email dated September 16, 2009, another Icon sales associate wrote to Mr. McGinnis stating, "I heard we are suing Octane!" In response, Mr. McGinnis wrote back, "***Yes – old patent we had for a long time that was sitting on the shelf. They are just looking for royalties.***" Ex. 1. In other words, Icon filed suit as a way to hamper a smaller competitor and potentially extract a royalty from Octane's successful high-end elliptical machine sales. Icon saw an up and coming competitor, who was receiving rave industry reviews and great commercial success, and used an "old patent" from the "shelf" to financially impair, and potentially extort royalties from, the much smaller Octane.

Though this scheme ultimately failed, the lawsuit has, nevertheless, been costly for both Octane and its insurer, Intellectual Property Insurance Services Corporation. To date attorney fees in the case for Octane total more than $1.3 million and costs to date total almost $280,000 (only approximately $21,000 of which are "taxable" costs). An affidavit setting forth further detail about these expenses is provided herewith, and Octane stands ready to provide the supporting invoices and billing details should the Court determine to grant the motion. In view of these facts, and as further explained below, recoupment of these expenses is justified in this exceptional case.

III. ARGUMENT

In exceptional cases, a court "may award reasonable attorney fees to the prevailing party" in a patent case. 35 U.S.C. § 285. The purpose of the statute is "to compensate the prevailing party for its monetary outlays in the prosecution or defense of the suit." *Automated Bus. Cos. v. NEC America, Inc.*, 202 F.3d 1353, 1355 (Fed. Cir. 2000) (*quoting Central Soya Co., Inc. v. Geo. A. Hormel & Co.*, 723 F.2d 1573, 1578 (Fed. Cir. 1983)); *see also Mathis v. Spears*, 857 F.2d 749, 753 (Fed. Cir. 1988).[3] "In addition, § 285 serves as a deterrent to 'improper bringing of clearly unwarranted suits' for patent infringement." *Id.* (*quoting Mathis*, 857 F.2d at 754); *see also Marctec, LLC v. Johnson & Johnson*, 07-CV-825-DRH, 2010 WL 680490 (S.D. Ill. Feb. 23, 2010).

---

3. Federal Circuit law, rather than the law of the regional circuits, applies to cases under § 285. *Highway Equip. Co. v. FECO, Ltd.*, 469 F.3d 1027, 1032 (Fed. Cir. 2006).

Appendix Q

In determining whether fees should be awarded to the prevailing party (in this case, Octane) courts conduct a two-step analysis. *Interspiro USA, Inc. v. Figgie Intern. Inc.*, 18 F.3d 927, 933 (Fed. Cir. 1994); *see also Synthon IP, Inc. v. Pfizer Inc.*, 484 F. Supp. 2d 437, 441 (E.D. Va. 2007). First, the court must determine whether the prevailing party has established by clear and convincing evidence that the case is exceptional. *Id.* Second, for those cases that are exceptional, the court must decide if fees are warranted under the circumstances. *Id.* For the reasons explained below, Icon's unwarranted and unreasonable lawsuit against Octane is "exceptional" and warrants the award of fees and nontaxable costs.

A. The Case is "Exceptional" Because the Case Was Vexatious, Unjustified and Brought in Bad Faith.

"A case may be deemed exceptional when there has been some material inappropriate conduct related to the matter in litigation." *Realtek Semiconductor Corp. v. Marvell Semiconductor, Inc.*, 2005 WL 3634617, *3 (N.D. Cal. Nov. 21, 2005); *Synthon IP*, 484 F. Supp. 2d at 441. "A number of different circumstances may support the finding of an exceptional case, including 'vexatious or unjustified litigation' or 'frivolous suit.'" *Takeda Chem. Indus., Ltd. v. Mylan Labs., Inc.*, 549 F.3d 1381, 1387 (Fed. Cir. 2008) (*quoting Beckman Instrs. Inc. v. LKB Produkter AB*, 892 F.2d 1547, 1551 (Fed. Cir. 1989)); *see also Yamanouchi Pharm. Co., Ltd. v. Danbury Pharmacal, Inc.*, 231 F.3d 1339, 1346-47 (Fed. Cir. 2000). Courts consider the "totality of the circumstances" to determine whether a case is exceptional. *Yamanouchi*, 231 F.3d at 1347.

Appendix Q

Bringing a vexatious, unjustified or frivolous case against an accused infringer/competitor is a sufficient basis to deem the case exceptional under § 285. *Takeda*, 549 F.3d at 1387 (stating that "a number of different circumstances may support the finding of an exceptional case, including 'vexatious or unjustified litigation' or 'frivolous suit'"). Indeed, in situations very similar to those here fees have been awarded. *See, e.g., Automated Bus. Cos.*, 202 F.3d at 1355 (affirming fee award following summary judgment of non-infringement and conclusion that claims were frivolous); *Marctec, LLC*, 2010 WL 680490 (granting fees following summary judgment of non-infringement in view of unreasonableness of contentions); *see also Mathis*, 857 F.2d at 754 (affirming fee award where litigated claims were frivolous); *Eltech Sys. Corp. v. PPG Indus., Inc.*, 903 F.2d 805, 810-11 (Fed. Cir. 1990) (affirming a fee award where the patentee filed and pursued a patent suit through trial without any reliable evidence of infringement).

Here, Icon's claims of infringement were objectively baseless and its contentions throughout the long suit frivolous and unreasonable. For example, the only independent claim of the '710 patent requires "linear reciprocating displacement of the first end of the stroke rail results in displacement of the second end of each stroke rail in a substantially elliptical path." Dkt. No. 158-1, claim 1(d). At *Markman*, Icon proposed a construction of "linear reciprocating displacement" which did *not* require "movement along a linear path." This proposed construction was not only at odds with the plain meaning of the phrase, but also at odds with the disclosures and other intrinsic evidence of the patent. The Court – rightly so –

rejected this manifestly unreasonable claim construction. Dkt. No. 144.

Not to be dissuaded, Icon pressed on with its assertions, opposing Octane's motion for summary judgment at a hearing before this Court in March 2011. Relying on a portion of its expert's report that used the *rejected* construction, Icon argued that "linear reciprocating displacement" occurs in Octane's machines. This is despite the fact that this same expert had acknowledged that in Octane's machines "the first end of the stroke rails . . .reciprocate along a *slightly accurate* path rather than along a straight path." Dkt. No. 158-18 at 12. Further, the requirement for "linear reciprocating displacement" was not an insignificant limitation in the '710 patent. To the contrary, in the notice of allowance, the Patent Office specifically identified linear reciprocating displacement as a reason why the '710 patent was allowable over the prior art. In effect, then, Icon argued that the Court should find infringement based on a curved path reciprocating design, when the patent-in-suit expressly required a straight path reciprocating design, a limitation critical to the patent's allowance.

The above example is only one of the frivolous positions taken by Icon. The design of the Q45 and Q47 machines is, in fact, so different from that of the design of the machine shown in the '710 patent, that Icon had to group selected elements of the accused devices and argue that the combination of parts corresponded to a single element of the patented machine. (*e.g.*, arguing that the actuator casting and integrated screw elements in the

accused devices are a "stroke rail" which "extends from foot rail to frame" via the rocker link). As found by the Court in the recent summary judgment Order, at least four elements of claim 1 were not literally present in the accused device, and equivalence was foreclosed in view of the prior art and file history for three of these four elements. Dkt. No. 187.

All of the above should have been readily apparent to Icon when it filed this suit. Icon had only to purchase one of Octane's elliptical machines (an insignificant cost compared to the cost of litigation) and remove the housing to see that the linkage mechanism of Octane's ellipticals was nothing like that of the '710 patent. Instead, Icon pursued, time and again, unreasonable and unsupportable infringement positions. "Where ... the patentee is manifestly unreasonable in assessing infringement, while continuing to assert infringement in court, an inference is proper of bad faith...." *Eltech*, 903 F.2d at 811. Pursuing a frivolous lawsuit *is* bad faith. *Marctec, LLC*, 2010 WL 680490 at *7. Icon's infringement assertions were undoubtedly "manifestly unreasonable," and its bad faith properly inferred from its pursuit of the frivolous claims.

The Court, in this case, however, need not rely only on an *inference* of bad faith. Icon's own documents evidence its subjective bad faith in bringing suit. Icon wanted "all guns loaded" against its smaller competitor and Icon pulled an old patent that was "sitting on the shelf" in order to "go after" Octane. Ex. 1, 2, and Dkt. No. 158-12. Icon knew it did not invent Octane's elliptical machines (covered by a different patent that predates Icon's '710 patent) yet

still it pursued infringement litigation, hoping to extract an agreement to pay royalties, or perhaps even drive the upstart young company from the market. Though Icon failed in these goals, Icon, nevertheless injured Octane, having forced it to defend, at "monstrous expense, its right freely to compete," subjecting Octane to a totally unwarranted suit. *Mathis*, 857 F.2d at 753-54. Because the assertions were unwarranted and vexatious, brought for competitive gain and not based on any good faith assessment of infringement, the case should be deemed "exceptional."

B. Fees and Costs Should Be Awarded.

If a Court deems a case exceptional, it may exercise its discretion to award attorney fees and costs to the prevailing party. *Kaehni v. Diffraction Co.*, 342 F.Supp. 523, 536 (D. Md. 1972). Patent litigation is expensive. According to a survey published in 2009 by the American Intellectual Property Law Association ("AIPLA") the median cost for a litigation in which the amount in controversy is from $1-25 million, through the end of discovery, is **$2.5 million** (inclusive of all costs). See Ex. 3.[4] Large companies know this, and, unfortunately, can use patent litigation as a weapon against competitors, especially smaller competitors. Many smaller competitors simply do not have the financial resources or wherewithal to defend a patent infringement case, no matter how

4. The AIPLA publishes this economic survey every two years, and the 2011 edition has not yet published, so 2009 represents the most recent data.

spurious the contentions. Judge Story once wrote that patent litigation is the "sport of kings." Larger companies can exploit this fact to the detriment of their smaller competitors.

The only thing that prevented Octane from suffering an unjust fate was that it had had the foresight to purchase an intellectual property insurance defense policy, a specialized form of insurance sold at a premium but providing defense funds in the event of a patent infringement suit, like here. Octane still had to pay a certain percentage of the cost of the defense of the litigation (over $400,000), but the insurance allowed it to carry-on when it otherwise would have had to settle the case or exit the market, despite the lack of merit to the claims. Not every company is as fortunate.

Awarding fees and cost to Octane in this case is appropriate, if nothing else to discourage these sort of abusive litigation tactics by other companies in the future. Icon knew Octane did not steal its invention, knew the claims of the patent did not read on the accused elliptical machines, but filed and pursued an infringement litigation anyway. At multiple points throughout the litigation Icon could have withdrawn its claims or taken actions to minimize the litigation. It chose not to do so. Indeed, it could have, following this court's claim construction, chosen to stipulate to non-infringement. It did not do so, instead, choosing to forge ahead with spurious arguments and contentions. In view of these facts, and the clear and convincing evidence of bad faith from correspondence in Icon's own files, an award of fees and costs in this case is warranted.

indicated above and in the accompanying affidavit of K. Kelscher, attorney fees in the case for the defense total more than $1.3 million and costs to date total almost $280,000 (only approximately $21,000 of which are "taxable" costs).[5] Upon grant of this motion, Octane will provide documentation supporting all of the fees and costs requested, including additional evidence as to the reasonableness of these fees,[6] which are, in any event, below the median for such cases. *See* Ex. 3.

---

5. Both fees paid by Octane and those paid by its insurer, IPISC, are properly included in the calculation of fees. *See Automated Bus. Co. Inc.*, 202 F.3d at 1355-56 (holding award of fees following summary judgment of non-infringement properly included amounts paid by non-party assisting in the defense of the litigation).

6. *See* Fed. R. Civ. P. 54 (d)(2)(C)("the court may decide issues of liability for fees before receiving submissions on the value of the services").

Appendix Q

IV. CONCLUSION

For the foregoing reasons, plaintiffs request that the Court grant attorney fees, costs, prejudgment, and statutory post judgment interest to Octane Fitness, LLC and any other relief that the Court deems just and proper.

Dated: July 18, 2011

Respectfully submitted,

By /s/_____
Rudolph A. Telscher, Jr.
rtelscher@hdp.com
Matthew L. Cutler
mcutler@hdp.com
HARNESS DICKEY
AND PIERCE
7700 Bonhomme Avenue, Suite 400
St. Louis, MO 63105
(314) 726-7500
(314) 726-7501 Facsimile

Attorneys for Defendant
OCTANE FITNESS, LLC

Appendix Q

EMAIL FROM P. MCGINNIS TO A. WILK DATED SEPT. 16, 2009

From: Pat McGinnis
Sent: Wednesday, September 16, 2009 2:53 PM
To: Adam Wilk
Subject: RE: I heard we are suing Octane!

Yes – old patent we had for a long time that was sitting on the shelf. They are just looking for royalties.

Pat McGinnis
Vice President of Global Sales
FreeMotion Fitness
Direct 435.786.2956
Cell 425.830.7987

From: Adam Wilk
Sent: Wednesday, September 16, 2009 2:40 PM
To: Pat McGinnis
Subject: I heard we are suing Octane!

Adam G. Wilk Specialty Fitness Sales
FreeMotion Fitness
866.459.5337 toll free / 214.418.9312 cell /
866.484.2622 fax
adam.wilk@freemotionfitness.com

Appendix Q

See Supplemental Appendix at Page SA-72

EXHIBIT 2 TO OCTANE'S MEMORANDUM IN SUPPORT OF ITS MOTION FOR ATTORNEY FEES AND COSTS -
EMAIL CHAIN INCLUDING EMAIL FROM P. MCGINNIS TO J. KAZAN AND A. WILK DATED AUGUST 24, 2008

APPENDIX R — ICON'S MEMORANDUM IN OPPOSITION TO OCTANE'S MOTION FOR ATTORNEY FEES AND COSTS, DATED AUGUST 4, 2011

IN THE UNITED STATES DISTRICT COURT
FOR THE DISTRICT OF MINNESOTA
FOURTH DIVISION

Case No.: 09-cv-00319 (ADM/SER)

ICON HEALTH & FITNESS, INC.,
a Delaware corporation,

Plaintiff,

vs.

OCTANE FITNESS, LLC, a Minnesota
limited liability company,

Defendant.

MEMORANDUM IN OPPOSITION TO DEFENDANT OCTANE FITNESS, LLC'S MOTION FOR ATTORNEY FEES AND COSTS

Plaintiff ICON Health & Fitness, Inc. ("ICON") respectfully submits this memorandum in opposition to Defendant Octane Fitness, LLC's Motion for Attorney Fees and Costs. ("Motion," Dkt. 194.)

[TABLES INTENTIONALLY OMITTED]

Appendix R

I. INTRODUCTION

Octane's motion seeks extraordinary relief. It asks the Court to rule that the present action is an exceptional case under 35 U.S.C. § 285 and award attorney fees to Octane as the prevailing party. Stripped of its legally irrelevant contentions, the basis for Octane's request is simply that it prevailed on most claim constructions and summary judgment of non-infringement and, as a result of that decision alone, is entitled to an award of attorney fees. Octane's position is untenable for many reason, not the least of which that it failed completely to apply the clear standard for a prevailing defendant's request for a finding of exceptionality.

"In determining whether a case is 'exceptional' under § 285, the relevant standard is set forth in *Brooks Furniture Manufacturing, Inc. v. Dutailier International, Inc.*, 393 F.3d 1378 (Fed. Cir. 2005)," *iLOR, LLC v. Google, Inc.*, 631 F.3d 1372, 1377 (Fed. Cir. 2011)—which, inexplicably, Octane does not even cite. Under *Brooks*, an action is exceptional "only if both (1) the litigation is brought in subjective bad faith, and (2) the litigation is objectively baseless." *Brooks*, 393 F.3d at 1381.

Disregarding this standard, Octane's *primary* argument is that ICON's claim was objectively baseless *and therefore* ICON commenced this litigation in bad faith. This reasoning impermissibly collapses the two distinct inquiries mandated by *Brooks* into one. Octane must prove "*[b]oth* the objective and subjective prongs . . . '. . . by clear and convincing evidence.'" *iLOR*, 631 F.3d at 1377 (citation

omitted, emphasis added). It cannot prove just one and then infer the other from it.

Moreover, "simply being wrong about claim construction should not subject a party to sanctions where the construction is not objectively baseless." *iLOR*, 631 F.3d at 1380. In addition to the other reasons articulated below, ICON's claim constructions and infringement positions were not objectively baseless because they were substantiated by extensive and thorough analysis of a competent expert. Indeed, the qualifications and methodology of ICON's expert, Dr. Rasty, were hotly contested by Octane in connection with its motion for summary judgment. In denying Octane's motion to strike Dr. Rasty's opinions, the Court concluded that he was qualified, his testimony on equivalence would not be struck as irrelevant, and that his testimony was reliable. *See* this Court's Memorandum Opinion and Order ("Summary Judgment Order," Dkt. 187) at pp. 11-14. On this basis alone, Octane's motion should be rejected.

With respect to the second prong, other than an impermissible inference from the objective merits, the only other "evidence" Octane offers of bad faith are three emails. But the emails Octane quotes simply do not touch on the essential inquiry: did ICON believe its claim had no merit? The position that leaves Octane in is aptly described by *MTS Systems Corp. v. Hysitron Inc.*, 639 F. Supp. 2d 996, 1004 (D. Minn. 2009):

> The fundamental flaw in defendant's position is the utter lack of direct evidence of subjective

> bad faith, and the consequent reliance on rather unpersuasive inferences derived from . . . court decisions relating to substantive issues in the case.

"Since . . . the first requirement (subjective bad faith) is not satisfied here, we need not decide whether the second (objectively baseless) standard was met." *Brooks*, 393 F.3d at 1381. That is the case here. ICON submits Octane's motion should be denied.

II. ARGUMENT

A. To Prevail On Its Motion, Octane Has the Burden to Demonstrate that the Case Is Exceptional and that the Requested Fees Are Warranted Under the Circumstances

Octane seeks relief under 35 U.S.C. § 285, which provides, "[t]he court in exceptional cases may award reasonable attorney fees to the prevailing party." To apply that statute,

> courts conduct a two-step analysis. First, the court must determine whether the prevailing party has established *by clear and convincing evidence* that the case is exceptional. Second, for those cases that are exceptional, the court must decide if fees are warranted under the circumstances.

(Mem. at 12 (citations omitted, emphasis added).)

Octane cites this statute but, remarkably, never cites the applicable standard for assessing exceptionality. Specifically, "[i]n determining whether a case is 'exceptional' under § 285, the relevant standard is set forth in *Brooks Furniture Manufacturing, Inc. v. Dutailier International, Inc.*, 393 F.3d 1378 (Fed. Cir. 2005)," *iLOR, LLC v. Google, Inc.*, 631 F.3d 1372, 1377 (Fed. Cir. 2011). Under *Brooks*,

> [a]bsent misconduct in conduct of the litigation or in securing the patent, sanctions may be imposed against the patentee only if both (1) the litigation is brought in subjective bad faith, and (2) the litigation is objectively baseless.

Brooks, 393 F.3d at 1381 (citing *Professional Real Estate Investors, Inc. v. Columbia Pictures Industries, Inc.*, 508 U.S. 49, 113 S. Ct. 1920, 123 L. Ed. 2d 611 (1993)); *see also iLOR*, 631 F.3d at 1377 ("Under this exacting standard, the plaintiff's case must have no objective foundation, and the plaintiff must actually know this. Both the objective and subjective prongs . . . 'must be established by clear and convincing evidence.'") (citation omitted). Octane does not argue either litigation misconduct or misconduct in securing the patent in suit. Instead, Octane argues that ICON's infringement claim was objectively baseless and ICON commenced this litigation in bad faith. Octane bears the heavy burden of proving these contentions by clear and convincing evidence. It has fallen well short of meeting its burden to establish either prong of the *Brooks* test.

B. Octane Has Not Established By Clear and Convincing Evidence that ICON's Contentions Were Objectively Baseless

To prevail, Octane must prove *both* that ICON's infringement claim had "no objective foundation" *and* that ICON "actually kn[e]w this," by clear and convincing evidence. *iLOR*, 631 F.3d at 1377. According to Octane, ICON's claim must have been baseless because the Court found on summary judgment that "at least four elements . . . were not literally present . . . and equivalence was foreclosed . . . for three of these four elements." (Mem. at 15.) But as this Court has found, even though summary judgment is entered against a plaintiff-patentee, it does not follow that the plaintiff's claims were objectively baseless. *Upsher-Smith Lab., Inc. v. Pan American Lab., Inc.*, 2004 U.S. Dist. LEXIS 7274, at *4 ("[D]espite this Court's judgment to the contrary, Upsher-Smith could have reasonably believed that [its] patents were valid given the requisite presumption of validity.") However, Octane goes on to argue that "the issues are so lopsided that Octane successfully proved three distinct elements are not met both literally and equivalently." (*Id.* at 3.) But Octane has materially overstated the rulings in this Court's Memorandum Opinion and Order. (Summary Judgment Order, Dkt. 187)

First, according to the Summary Judgment Order itself, there were only "three disputed elements" at issue (Summ. J. Order at 15), not four. Second, ICON raised "an issue of fact" with respect to one of those three. (*Id.* at 24). Thus, this Court ruled that just two elements

were missing. (*Id.* at 15-22.) Third, ICON's position with respect to one of those elements—"stroke rails"—was so far from objectively baseless that for nine months, Octane *admitted* that the element was present in its Q47 accused devices. (*Id.* at 21 n. 4.) Also, Octane did not add its non-infringement theory based on "stroke rail" to the case until it sought leave to file its Supplemental Proposed Claim Constructions (Exh. A to the Declaration of Craig Hall ("Hall Decl."), filed contemporaneously herewith), eight months after submission of its first Proposed Claim Constructions (Dkt. 120). Thereafter ICON submitted an addendum to Dr. Rasty's expert report addressing Octane's new non-infringement arguments based on stroke rail, including reasons why Octane's devices had "stroke rails" under the doctrine of equivalents. (Exh. B to the Hall Decl.) Octane never rebutted ICON's position including its complete failure to even address this argument in its Reply memorandum in connection with the summary judgment motion (Dkt. 179). Octane's contention that ICON's "stroke rail" infringement position was objectively baseless is thus without merit.

The only predicate left for Octane's baselessness argument is the "means for connecting" element, including the "linear reciprocating displacement" term appearing in that element. As shown below, Octane has not proven, by clear and convincing evidence, that ICON's claim construction and infringement contentions with respect to that element were objectively baseless, and indeed there is strong evidence (including competent expert testimony) to the contrary. Moreover, under the "exacting standard" prescribed by the Federal Circuit in *Brooks*,

"the plaintiff's case must have no objective foundation, and the plaintiff must actually know this." *iLOR*, 631 F.3d at 1377. Octane has not even attempted to offer evidence that ICON possessed such knowledge.

1. ICON's Proposed Construction of "Means for Connecting" and "Linear Reciprocating Displacement" Was Not Objectively Baseless

At the *Markman* stage of this case, ICON argued for an interpretation of "linear reciprocating displacement" that did not require movement along a straight-line path. That interpretation was based on the distinction between the use of the term "path" in one portion of the claim and use of the term "displacement" elsewhere, demonstrating that the two terms were used to mean two different things. (Dkt. 131, pp. 26-27). ICON's interpretation was also based on the testimony of Dr. Johan Rasty, Ph.D., who testified that this is how the term is actually used by those of skill in the field of mechanical engineering. (Dkt. 131, p. 29 n.10; Dkt. 131-5, p. 19). That testimony was corroborated by numerous objective technical dictionaries cited by ICON in support of its proposed construction. (Dkt. 131, pp. 27-28). It is difficult to see how ICON's proposed construction of "linear reciprocating displacement" could have been "objectively baseless" in light of these arguments and evidence.[1]

---

1. Contrary to the insinuations in Octane's motion (Octane Mem. at 14), ICON did not continue to rely on this claim construction after the Court's *Markman* order. Instead, ICON expressly acknowledged that "it appears that the Court understood that term

2. ICON's Alternative Argument for Literal Infringement of the "Means for Connecting" Limitation Was Not Objectively Baseless

ICON also had two alternative arguments to demonstrate infringement of the function[2] associated with the "means for connecting" element, both of which were also eminently reasonable. To prevail on this motion, Octane must prove that *all* of them were "objectively baseless" and must do so by "clear and convincing evidence."

ICON also resisted summary judgment by arguing an alternative theory of literal infringement of the "means for connecting" limitation that was *not* premised on the interpretation of "linear reciprocating displacement" the Court had rejected. ICON pointed out that the function of the "means for connecting" element does not require a structure that creates "linear reciprocating displacement" at one end of the stroke rail. Instead, the claimed function assumes that such displacement is already occurring and only requires a structure that "connects" the stroke

---

to mean 'movement back and forth in a straight line.'" (Dkt. 175, p. 19). The argument to which the Court pointed in its Summary Judgment Order "relying on a portion of Dr. Rasty's report which uses the rejected construction" (see Dkt. 187, p. 16), was not an argument that Octane's machines had "linear reciprocating displacement" but rather an argument that the claim did not require a structure that created linear reciprocating displacement, only a structure that performed the claimed "connecting" function. (Dkt. 175, p. 21).

2. ICON addresses the structural aspect of the "means for connecting" element below in n. 4.

rail to the frame so as to convert that displacement into elliptical motion at the other end of the stroke rail. (Dkt. 131, pp. 17–26; Dkt. 175, pp. 19–21.) The Octane machine clearly has such a structure, as established by *unrebutted* testimony from Dr. Rasty. (Dkt. 175, pp. 21–22.)

Instead of addressing the objective merits of the argument ICON actually made, Octane addresses a substitute of its own devising. According to Octane, "Icon argues that 'linear reciprocating displacement' occurs in Octane's machines." (Mem. at 14.) But after the Court rejected ICON's interpretation of "linear reciprocating displacement," that was not ICON's argument. ICON's argument was that the claim did not require a structure that created linear reciprocating displacement—only a structure that performed the claimed "connecting" function. (Dkt. 175, p. 21.) This was not an unreasonable claim construction argument, particular given that nowhere in the claim language does a "means for creating linear reciprocating displacement" element appear.

3. ICON's Equivalence Argument Was Not Objectively Baseless

Even if both of ICON's claim construction positions were rejected, ICON also had yet another alternative position based on infringement under the doctrine of equivalents. ICON presented expert testimony that the motion at the end of the stroke rail in Octane's machines was so *slightly* arcuate that there was no substantial difference between it and perfect straight-line motion. (Dkt. 175, pp. 22–25.) This testimony was also unrebutted.

extent the broad claim construction advanced by Icon is adopted by the Court).

IX. Invalidity Pursuant to 35 U.S.C. § 112

57. I have been told that, in determining what structure from a patent specification "corresponds" to a function stated in a patent claim, corresponding structure must include all structure that actually performs the recited function.

58. I have also been told that one of the requirements of the Patent Act, found in the second paragraph of 35 U.S.C. § 112, is that a patent shall conclude with one or more claims particularly pointing out and distinctly claiming the subject matter which the applicant regards as his invention. It is my further understanding that this determination is done from the perspective of one of skill in the art of elliptical exercise machines.

59. If Icon's proposed claim constructions are adopted by the Court in this case, it is my opinion that the claims at issue will be invalid as failing to meet the requirements of § 112, ¶ 2 for at least two reasons.

60. First, the "means for connecting" limitation of claim 1 of the '710 patent has a recited function of "connecting each stroke rail to the frame such that linear reciprocating displacement of the first end of each stroke rail results in displacement of the second end of each stroke rail in a substantially elliptical path." I find that this language is clear and understandable on its face and no ambiguity exists as to its meaning.

61. Claim 1 requires that one end of the stroke rail be connected to a foot rail. It is this end of the stroke rail that "results in displacement ... .in a substantially elliptical path." The file history of the '710 patent makes clear that the opposite end of the stroke rail must be connected to the frame.

62. In the "Reasons for Allowance" contained in the Patent Office's Notice of Allowance, the Patent Office stated: "The following is an examiner's statement of reasons for allowance: The prior art fails to show or teach applicant's claimed exercise apparatus comprising ... a pair of stroke rails each having one end hingedly connected to a respective foot rail and having the opposite end connected to the frame for linear reciprocating movement and for producing an elliptical path."

63. It is, therefore, my opinion that the "means for connecting each stroke rail to the frame ..." requires pin 76, flared head 82, and C-channel 84 (I will refer to this structure in this Expert Report as "the C-Channel Structure"). That structure is necessary to perform the function of connecting the stroke rail to the frame so that linear reciprocating displacement of the first end of the stroke rail results in displacement of the second end in a substantially elliptical path.

64. For example, without the C-Channel Structure, the elliptical device of the '710 patent would not even work, thus contradicting the function recited in the "means for connecting" claim, which requires a linear displacement and elliptical path. This opinion is confirmed by the

inventor of the '710 patent, William Dalebout, who testified that without the C-Channel Structure, the elliptical machine would not work:

> "If you [remove the C-Channel Structure], I've got nothing. I've got a pile of steel. I don't have a mechanism. You have taken part of my mech away ... If you take part of the mechanism away it doesn't work anymore. And you are talking total speculation, which to me is nonsense." Dalebout deposition at 53-54.

65. Because Icon's claim construction does not include the C-Channel Structure, it does not contain all the structure that is necessary to perform the "means for connection" function. The claims that contain this limitation would, therefore, be indefinite if Icon's claim construction were adopted. It would also directly contradict the reasons why the patent '710 was found inventive, and ultimately granted, by the United States Patent Office.

66. Second, the "means for selectively varying" limitation of claim 1 of the '710 patent has a recited function of "selectively varying the size of the substantially elliptical path that the second end of each stroke rail travels." I find that this language is clear and understandable on its face and no ambiguity exists as to its meaning.

67. It is my opinion that the "means for selectively varying ..." requires the C-Channel Structure. That structure is necessary to perform the function of varying

the size of the substantially elliptical path that the second end of the stroke rail travels. Without the C-Channel structure, the two methods of adjusting the elliptical path disclosed in the '710 patent (disclosed in Figures 5 and 6 and at column 6, lines 8-67) will not work. The C-Channel Structure is required to vary the size of the elliptical path by providing a brace off of which an increased or decreased length of the stroke rail can push to create a different elliptical path.

68. Without the C-Channel Structure, the stroke rail of the '710 patent would just stick out into the air either more or less. For example, with a longer length of stroke rail, there would be nothing against which the longer stroke rail could push to actually adjust the stride length.

69. Because Icon's claim construction for the "means for selectively varying" does not include the C-Channel Structure, it does not contain all the structure that is necessary to perform the recited function. The claims that contain this limitation would, therefore, be indefinite if Icon's claim construction were adopted.

X. Conclusion

70. For all of the reasons discussed above, the contested claims of the '710 patent (claims 1-5, 7, and 9-11) are all anticipated by the '339 patent. Further, all the contested claims of the '710 patent are anticipated by the '814 patent. At the very least, even if claims 4 and 5 of the '710 patent are not anticipated by the '814 patent, those claims are rendered obvious by the '814 patent in view of

the '610 patent. Further, all the contested claims of the '710 patent are anticipated and/or rendered obvious by the '321 patent. Last, all the contested claims of the '710 patent are invalid as indefinite pursuant to 35 U.S.C. § 112.

I hereby certify under penalty of perjury of the laws of the State of Illinois and the laws of the United States that the foregoing is true and correct to the best of my information and knowledge.

Executed this 1st day of March, 2010, at Naperville, Illinois.

/s/ Steven M. Levy

APPENDIX W — EXCERPTS FROM P. MCGINNIS DEPOSITION CONTAINED IN FED. CIR. REPLY AT PP. 5-6, DATED MAY 3, 2013

UNITED STATES COURT OF APPEALS
FOR THE FEDERAL CIRCUIT

2011-1521, -1636

ICON HEALTH & FITNESS, INC.,

Plaintiff-Appellant,

v.

OCTANE FITNESS, LLC,

Defendant-Cross Appellant.

Appeals from the United States District Court for the District of Minnesota in case no. 09-CV-0319, Judge Ann D. Montgomery.

CONFIDENTIAL REPLY BRIEF FOR DEFENDANT-CROSS APPELLANT OCTANE FITNESS, LLC

Rudolph A. Telscher, Jr.
Kara R. Fussner
Harness, Dickey & Pierce, PLC
770 Bonhomme Avenue, Suite 400
St. Louis, MO 63104
(312) 726-7500

Counsel for Defendant-Cross Appellant

May 3, 2012

expert contended that both constrain lateral movement. The '710 patent does not discuss this functional purpose of the c-channel; the patent only discusses that the c-channel constrains the flared head pin to force the first end of the stroke rail to move up and down in a linear path, *i.e.*, the overriding purpose of the c-channel is to create linear movement, not to restrain lateral movement. There is absolutely no discussion in the patent about the c-channel constraining lateral movement even if this is an ancillary function. Herein lies the problem: where competitive products are involved, there is always some similarity of operation, but the question is whether the similarity resides in the *patentable invention*, not ancillary functions that are common to all competitive devices. Experts are basically free to exploit the situation in an effort to create fact issues and to contend that a case has merit.

Why did Icon go to these lengths, if it did not genuinely believe it had a meritorious action? Documents uncovered in the litigation ultimately answered this question. Icon decided to sue Octane with an "old patent" it had "sitting on the shelf" as a way of "looking for royalties" and hampering the upstart competitor. These, again, were Icon's words spoken by a Vice President in sales. Icon tries to downplay the statements of its Vice President, Pat McGinnis, by claiming – for the first time – that he is with "FreeMotion Fitness" and not Icon. Yet, in the litigation, Mr. McGinnis was presented for deposition by Icon's counsel, without subpoena, as an "Icon witness[]" and, indeed, testified at his deposition regarding his employment by *Icon* as follows:

Appendix W

And Pat, what is your current — who do you work for, who is your employer?

A FreeMotion Fitness.

Q Now, is FreeMotion — I don't know if you know this but is FreeMotion Fitness a company or is it a brand?

A Well, we've always been called a subsidiary of ICON Health & Fitness, but as the company's transitioned we are operated more as a brand as of this point.

Q Let me ask you this. When you get a paycheck does it say —

A ICON.

Q Now, is FreeMotion Fitness a company that was acquired at some point by ICON?

A Yes.

McGinnis Dep. 5:1-15.[1]

---

1. Because Icon never before raised Mr. McGinnis' employment status as a reason to disregard his email statements, this page of deposition testimony was not part of the lower court record.

Appendix W

After receiving the above documents and ultimately prevailing at the summary judgment stage, Octane moved the lower court for fees based on a totality of the circumstances. Octane, at that point, had spent approximately $1.3 million to defend itself, in a case that should never have been brought and was litigated for reasons unrelated to the merits of patent infringement. The lower court did not hold a hearing, discounting the above evidence of subjective bad faith as mere emails not reflective of Icon's "official" position. Yet the above evidence combined with the hard analysis regarding why this case was baseless from the

* * * *

RECORD
AND
BRIEFS

DEC 2 - 2013

No. 12-1184

REDACTED PUBLIC VERSION

IN THE

Supreme Court of the United States

OCTANE FITNESS, LLC,

Petitioner,

v.

ICON HEALTH & FITNESS, INC.,

Respondent.

ON WRIT OF CERTIORARI TO THE
UNITED STATES COURT OF APPEALS
FOR THE FEDERAL CIRCUIT

SUPPLEMENTAL JOINT APPENDIX

LARRY R. LAYCOCK
Counsel of Record
MASCHOFF BRENNAN LAYCOCK
GILMORE ISRAELSEN & WRIGHT
201 S. Main Street
Suite 600
Salt Lake City, UT 84111
(435) 252-1360
llaycock@maschoffbrennan.com

RUDOLPH A. TELSCHER, JR.
Counsel of Record
HARNESS, DICKEY &
PIERCE, PLC
7700 Bonhomme Avenue
Suite 400
St. Louis, MO 63105
(314) 726-7500
rtelscher@hdp.com

Attorneys for Petitioner

CARTER G. PHILLIPS
SIDLEY AUSTIN, LLP
1501 K Street N.W.
Washington, DC 20005

Attorneys for Respondent

PETITION FOR CERTIORARI FILED MARCH 27, 2013
CERTIORARI GRANTED OCTOBER 1, 2013

Library of Congress
Law Library

TABLE OF CONTENTS

Page

EXHIBIT A TO COMPLAINT – U.S. PATENT NO. 5,104,120 ..... SA-1

EXHIBIT B TO COMPLAINT – U.S. PATENT NO. 6,019,710 ..... SA-10

EXHIBIT A TO ICON'S SUPPLEMENTAL CLAIM CHART – OCTANE'S ENGINEERING DRAWINGS [REDACTED] SA-25

J. RASTY DEPOSITION

DRAWING – J. RASTY DEPOSITION EXHIBIT 5 ..... SA-49

DRAWING – J. RASTY DEPOSITION EXHIBIT 6 ..... SA-50

DRAWING – J. RASTY DEPOSITION EXHIBIT 7 ..... SA-51

DRAWING – J. RASTY DEPOSITION EXHIBIT 8 ..... SA-52

U.S. PATENT NO. 5,707,321 ..... SA-53

EXHIBIT 2 TO OCTANE'S MEMORANDUM IN SUPPORT OF ITS MOTION FOR ATTORNEY FEES AND COSTS - EMAIL CHAIN INCLUDING EMAIL FROM P. MCGINNIS TO J. KAZAN AND A. WILK DATED AUGUST 24, 2008 ..... SA-72

WEBSTER DICTIONARY PAGES INCLUDED IN OCTANE FITNESS' SUPPLEMENTAL PROPOSED CLAIM CONSTRUCTIONS SA-76

PAGES (SA-25 TO SA-48) HAVE BEEN REDACTED DUE TO CONFIDENTIAL MATERIALS

SA-1

EXHIBIT A TO COMPLAINT – U.S. PATENT NO. 5,104,120

US005104120A

United States Patent [19]

Watterson et al.

[11] Patent Number: 5,104,120

[45] Date of Patent: Apr. 14, 1992

[54] EXERCISE MACHINE CONTROL SYSTEM

[75] Inventors: Scott R. Watterson, River Heights; William T. Dalebout; Curt G. Bingham, both of Logan, all of Utah

[73] Assignee: Proform Fitness Products, Inc., Logan, Utah

[21] Appl. No.: 306,861

[22] Filed: Feb. 3, 1989

[51] Int. Cl.[5] A63B 21/005

[52] U.S. Cl. 482/8; 482/7; 482/2; 482/54; 482/63

[58] Field of Search ..... 272/69, 70, 73, 129, 272/DIG. 5, DIG. 6; 128/25 R; 73/379; 434/247, 392

[56] References Cited

U.S. PATENT DOCUMENTS

4,358,105	11/1982	Sweeney, Jr.	272/73
4,378,111	3/1983	Tsuchida et al.	272/73
4,643,418	2/1987	Bart .	
4,708,337	11/1987	Shyu	272/69
4,749,181	6/1988	Fitzway et al.	272/69

FOREIGN PATENT DOCUMENTS

0199442 10/1986 European Pat. Off. 272/134

OTHER PUBLICATIONS

Advertising sheet for TREK 200 Treadmill by Weslo, Inc., 1988.

Advertising sheet for T50 Treadmill by Proform, 1987.

Owner's Manual for the Proform T50 Treadmill, 1988.

Primary Examiner—Richard J. Apley
Assistant Examiner—Joe H. Cheng
Attorney, Agent, or Firm—Trask, Britt & Rossa

[57] ABSTRACT

A control system includes an adjustment knob to regulate the resistance of the exercise machine such as a treadmill, rowing machine, or stationary exercise cycle. Various indicia are positioned proximate the knob so the user may specifically select an exercise program and real time feedback of exercise performance through the use an ear clip supplying pulse information or other biological data which is converted and displayed for observation by the user.

8 Claims, 4 Drawing Sheets

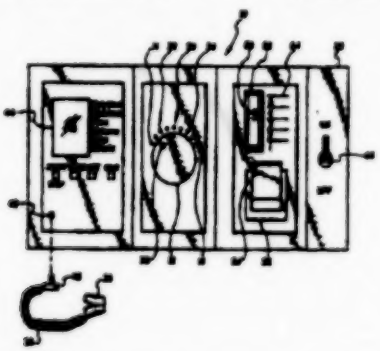

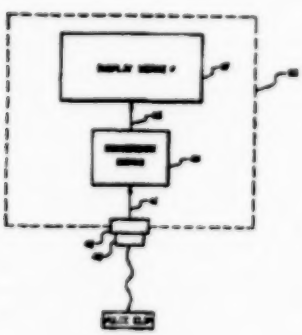

6

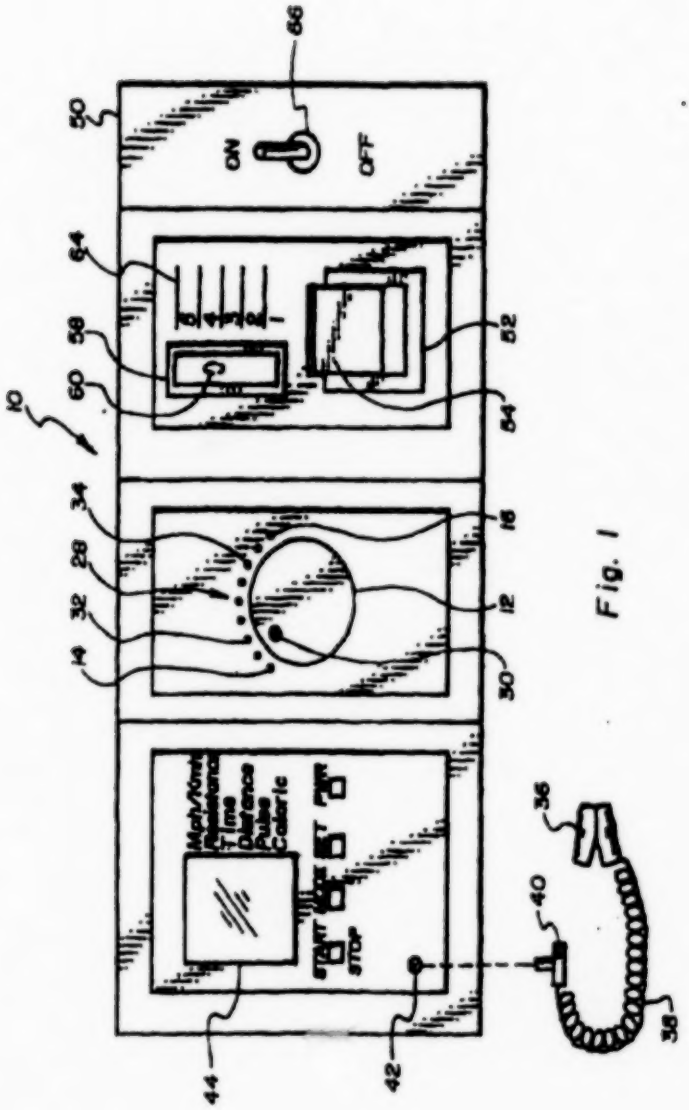

Fig. 1

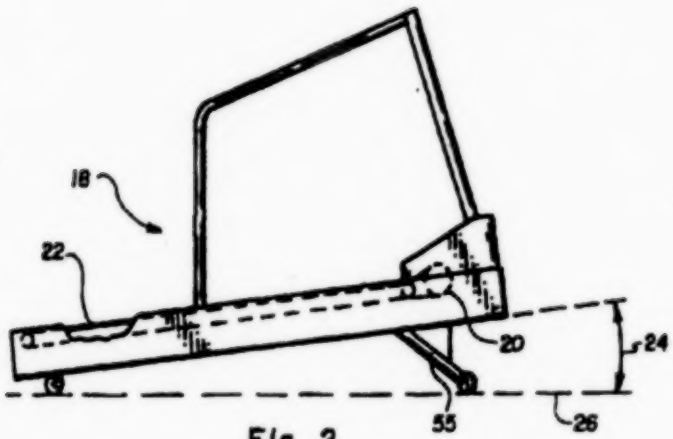

Fig. 2

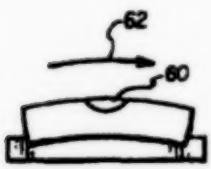

Fig. 3

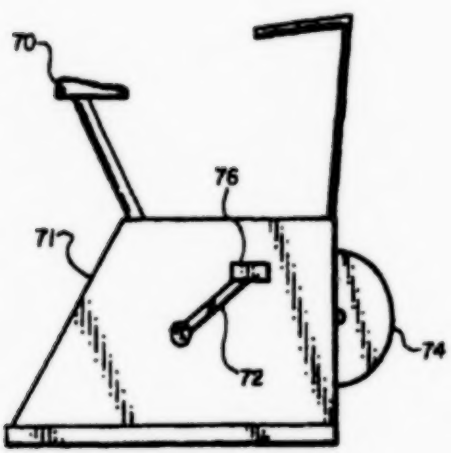

Fig. 4

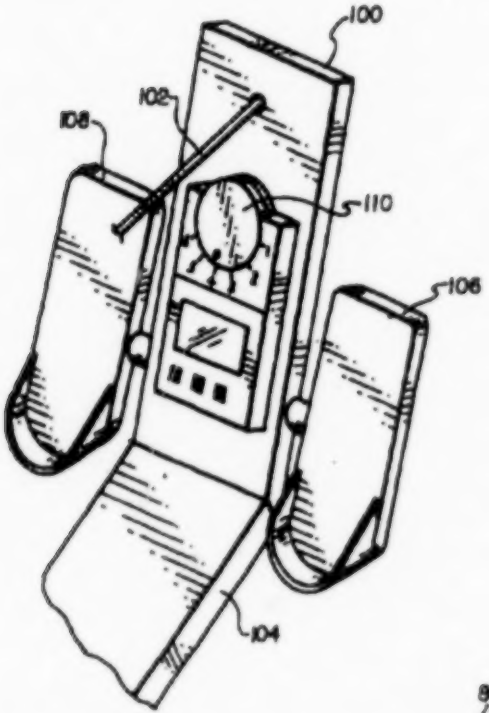

Fig. 6

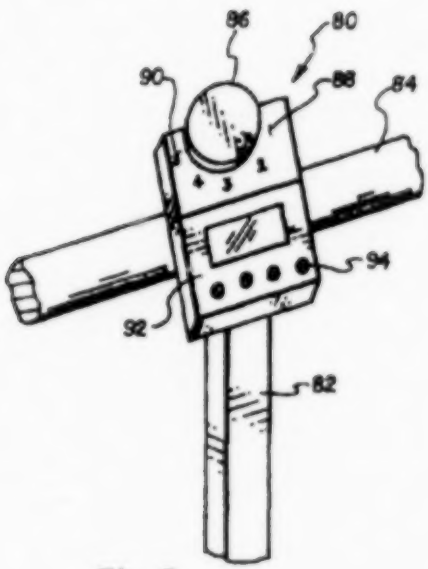

Fig. 5

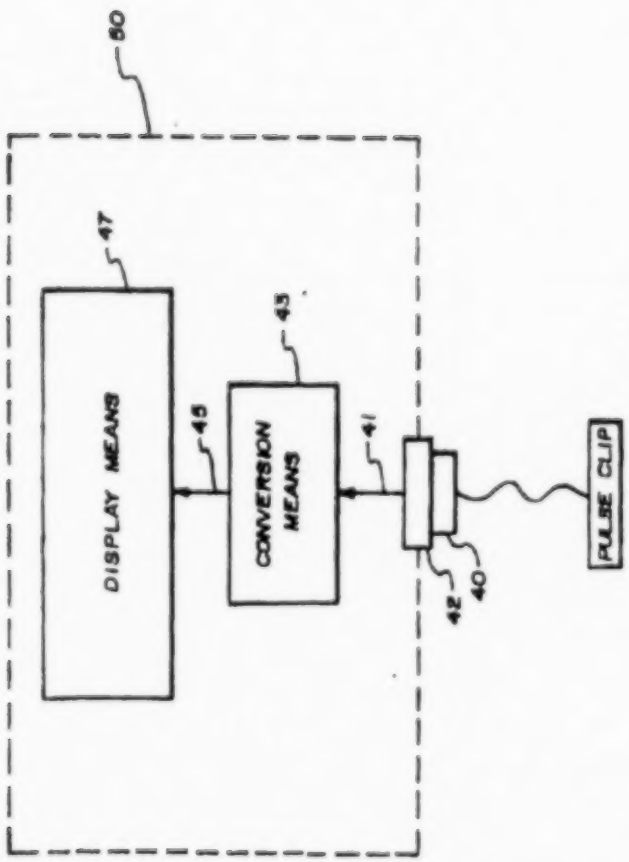
60
47
DISPLAY MEANS
45
43
CONVERSION MEANS
41
42
40
PULSE CLIP

Fig. 7

EXERCISE MACHINE CONTROL SYSTEM

BACKGROUND OF THE INVENTION

1. Field

This invention relates to exercise machines which have means to resist movements of the user in the performance of exercises.

2. State of the Art

Typical exercise machines now widely in use have a resistance so that a user will suffer an exercise benefit upon the performance of a particular exercise. For example, a motorized treadmill may be used to perform walking or jogging type exercises with the resistance or degree of difficulty varying based on the angle of inclination of the treadmill surface with horizontal. In some models, the user may also adjust the speed of the tread to regulate the exercise.

Stationary exercise cycles similarly have a means to regulate the resistance. That is, many stationary exercise cycles have a rotating flywheel with resistance structure such as a brake to simulate the resistance experienced if one were to pedal a bicycle under actual conditions. By adjusting the resistance, the user can change the degree of difficulty being experienced in causing the flywheel to rotate by pedalling.

Similarly, rowing machines of the type that use a cable connected to a flywheel structure may be operated in a fashion similar to a stationary exercise cycle to vary the degree of resistance or the difficulty of particular exercises. For some users, a coordinated exercise program is desirable in which the hardness or the degree of difficulty of the exercise is varied throughout a selected exercise period such as one half of an hour.

Although adjustments have been available to regulate the hardness or degree of difficulty of a particular exercise, a control system with feedback has not been presented to provide the user with the ability to quantitatively and easily regulate the hardness throughout the course of a particular exercise or from one exercise period to another later exercise period.

SUMMARY OF THE INVENTION

A control system is presented for use with an exercise machine which has resistance means to resist movement of the user in the performance of exercises. It has control means interconnectable to the resistance means for operation by the user in an contemporaneous manner to control the resistance means to vary the resistance between an easy configuration for the performance of easy exercises and a hard configuration for the performance of hard exercises by the user of the exercise machine. The control system also includes indication means positioned proximate the control means to indicate the relative selection of the control means between the easy configuration and the hard configuration and feedback means interconnectable to the user to detect and supply selected biological data while the user is operating the exercise machine. Conversion means are connected to receive the biological data and to convert the biological data into selected display data. Display means are further interconnected to the conversion means and positioned for observation by the user performing exercises on the exercise machine to display the biological data, in real time.

The feedback means is desirably a pulse detector connected to the user to detect the user's pulse and to supply a signal reflective thereof to the conversion means. As known, the conversion means assumes that an average number of calories are burned at a given pulse rate, given that the pulse rate reflects the degree of exertion during the exercise. The display means also is capable of displaying pulse data and calorie burn data.

In a more preferred arrangement, the control system includes a chassis positioned on the exercise machine with the control means associated therewith for operation by the user. The conversion means and the display means are also adapted to the chassis.

The exercise machine may be a motorized treadmill in which the control means includes the speed adjustment to regulate the speed of the treadmill and an adjustment to operate the incline of the treadmill. The indication means may include an inclinometer adapted to the chassis with a scale positioned proximate thereto to indicate the relative inclination of the treadmill.

The exercise machine may also be a stationary exercise cycle. Control means includes a friction adjust mechanism to frictionally resist movement of the pedals of the stationary exercise cycle. The exercise machine may also be a rowing machine of the type which has a flywheel and cable arrangement.

A method of exercising is presented which includes use of the control system on an exercise machine in order to provide the user with means to control exercise by regulating the resistance and in turn the pulse rate and in turn the calorie burn of the user.

BRIEF DESCRIPTION OF THE DRAWINGS

In the drawings, which illustrate what is presently regarded as the best mode for carrying the invention:

FIG. 1 is a frontal depiction of a control system of the instant invention;

FIG. 2 is a side view depiction of a motorized treadmill of the type suitable for use with the instant invention;

FIG. 3 is an enlarged side depiction of a portion of an inclinometer for use with the treadmill of FIG. 2;

FIG. 4 is a side depiction of an exercise cycle of the type for which the control system of the instant invention may be used;

FIG. 5 is a partial three-dimensional cut-away depiction of a control system adapted to a stationary exercise cycle;

FIG. 6 is a portion of a rowing machine with cable having a control system of the instant invention adapted thereto; and

FIG. 7 is a block diagram of portions of the control system of the instant invention.

DESCRIPTION OF THE ILLUSTRATED EMBODIMENT

FIG. 1 illustrates the observable components of a control system generally referred to by the number 10. The control system 10 includes control means which are here shown to include a knob 12 which is operable between an easy configuration 14 and a hard configuration 16. That is, knob 12 can be rotated between the easy configuration 14 and the hard configuration 16 as desired by the user to in turn regulate the resistance means of an exercise machine in which the resistance means resists movement of the user in the performance of selected exercises such as a treadmill of the type illustrated in FIG. 2.

Those skilled in the art will recognize that a treadmill 18 of the type shown in FIG. 2 is operated by a motor

SA-7

which is positioned interior of the chassis and is shown here in phantom 20 to in turn propel a tread or endless belt 22 upon which the user stands in order to walk or jog or run. Since the motor 20 typically can be operated at different speeds by operation of a desired control, it can be seen that the pace of the user can be voluntarily changed to increase the degree of difficulty of a particular exercise from a slow walk to a run (i.e., from easy to hard).

The treadmill 18 of FIG. 2 can be raised or lowered to adjust its inclination 24 with respect to the support surface 26 upon which the treadmill 18 resides. Increasing the inclination 24 can increase the degree of difficulty or hardness of the exercise (e.g., walking or jogging) between level and an uphill configuration (i.e., from easy to hard).

For the control system 30 shown in FIG. 1, the knob 32 is connected to vary the speed of a treadmill such as the treadmill 18 of FIG. 2 and more particularly the speed of the tread 22. Thus when the knob 32 is in position or configuration 34, the treadmill is in an easy configuration in which the resistance is set for the performance of easy exercises. That is, the treadmill is moving at a relatively slow speed so that the exercise being performed may be viewed as a walk. The knob 32 can then be positioned clockwise to the hard position 36. In the hard configuration 36 the resistance is set for the performance of hard exercises. That is, the speed of the tread 22 (FIG. 2) is increased so that the user by definition will need to jog or run at a substantially quicker pace, which is in turn deemed to be a hard exercise. As known, the user thereby increases his or her pulse rate as the user quickens his or her pace.

The control means also has indicia positioned proximate thereto. More particularly, the knob 32 has a scale 38 to indicate the relative selection between the easy configuration 34 and the hard configuration 36. An index or scribe 39 is imprinted on the knob 32 and may be rotated to register with any one of a plurality of dots or other index marks of the scale 38. Therefore a user may start an exercise with the index 39 in alignment or in registration with a dot such as dot 32. After a period of time the speed of the treadmill may be increased by using the index 39 in registration with dot 34. Thus the user extemporaneously selects a harder exercise. The speed of the treadmill can then be adjusted by the user according to his or her own experience, personal capability and desires.

The control means of FIG. 1 also includes feedback means which were shown to be a pulse clip 36 for interconnection to a finger, earlobe or similar appendage or portion of the body. The pulse clip 36 is known to those skilled in the art and senses the pulse of the user and transmits signals reflective thereof via conductors 38 to a connector 40 for further connection via receptacle 42 to a conversion system. That is, circuitry is provided to convert the biological data being received from the clip 36 through the connector 40 and receptacle 42. The conversion means converts the pulse data being transmitted into selected display data which may be shown on the face 44 of a display means which is here shown positioned for observation by the user performing exercises on the exercise machine. The circuitry (not shown) is available and may be easily assembled by those skilled in the art.

The biological data being received via the clip 36 and the connector 40 and receptacle 42 may be displayed on the display 44 as selected or as desired by the user. With the display of a particular biological function such as pulse, the user may operate the knob 32 to a pre-selected selected scale point such as the third dot 32 to vary the hardness of the exercise to achieve a particular pulse or pulse rate which would then be displayed on the screen 44. Thus the user can extemporaneously devise and operate an exercise program to regulate his or her own pulse rate in real time throughout the period of exercise.

The control system 30 preferably includes a chassis 48 which is positioned on the selected exercise machine with the control means associated therewith for operation by the user. The conversion means and the display means are also adapted to the chassis 48.

In one embodiment the exercise machine is a motorized treadmill such as the treadmill 18 previously described and shown in FIG. 2. The control means includes the knob 32 which functions as a speed adjustment to regulate the speed of the tread 22. The control means also includes an incline adjustment 52 which may be operated by the user to adjust the angle of incline 24 (FIG. 2) of the treadmill 18. As here shown, the incline adjustment 52 includes a paddle switch 54 which is interconnected connected to operate a cylinder to in turn operate the front leg structure 28 of the treadmill 18 of FIG. 2 similar to that illustrated and described in copending and commonly assigned U.S. patent application Ser. No. 809,270 filed Jan. 30, 1987, and now abandoned, the disclosure of which is hereby incorporated by reference thereto.

The precise angle of inclination 24 is desirable information not heretofore available. The control system of FIG. 1 includes an inclinometer 58 which is mounted or adapted to chassis 48. Upon operation of the incline adjustment 52, the inclinometer 58 will indicate to the user the relative incline selected. A gas bubble 60 moves lengthwise 62 (FIG. 3) to indicate the relative inclination with respect to indicia 64 (FIG. 1) which is a numbered scale. Particular angle of inclination 24 (FIG. 2) for the number or index 64 (FIG. 1) is used to reposition the treadmill 18 to substantially the same level of inclination 24 as used in prior exercises or increased as desired by the user during the course of a particular exercise routine.

The control systems of FIG. 1 may also include a simple on-off switch 66 to energize and de-energize the motor 20.

The exercise machine may also be an exercise cycle such as the one shown in FIG. 4. The cycle of FIG. 4 uses a control system as better illustrated in FIG. 5. The exercise cycle of FIG. 4 has a seat arrangement 70 adapted to a frame 71 which has a pedal or crank structure 72 interconnected by chains, locations or other gear drive means to a flywheel 74. Exercise benefit is obtained by placing the user's feet upon pedals 76 and rotating the pedal mechanism 72 so in turn cause the flywheel 74 to operate. A brake, strap, band or other similar arrangement may be adapted to frictionally resist rotation of the flywheel 74. Such a resistance structure may be regulated by operation of a knob or lever on a variety of different known exercise cycles.

In the instant invention, control means 80 of FIG. 5 is shown adapted at the top of the upright post 82 of a cycle near the connection to handle bar structure 84. The control means of the claimed invention includes a knob 86 which is connected to the frictional resistance means in order to vary the resistance to the rotation of the flywheel 74 (FIG. 4) between an easy configuration 88 and a hard configuration 90. In the easy configura-

12

tion, the resistance to the rotation of the flywheel 74 is selected to be minimal so that the user may easily and comfortably pedal the pedal mechanisms 72. The knob 96 may be rotated to the hard position or configuration 98 in which considerable amount of resistance is imposed to resist the movement of the flywheel 74 and in turn cause the user positioned on the exercise cycle to pedal more strenuously to cause rotation of the flywheel 74.

The control system 80 shown in FIG. 5 includes display means 92 to display a variety of different functions. The display means 92 also includes feedback means and conversion means to convert feedback data such as pulse rate data. The feedback means includes a pulse clip, such as the clip 36, which plugs into receptacle 94. Operation of the control means 80 is substantially the same as discussed in reference to the control means of FIG. 1.

In another embodiment, a rowing machine 100 is provided. It is of the type which has a cable 102 that is pulled in and out against a resistance arrangement by the user pulling on a handle or other means affixed to the distal end of the cable 102. The rowing machine 100 includes a base frame structure 104 and foot supports 106 and 108. A control system shown on the rowing machine 100 of FIG. 6 regulates the resistance against movement of the cable 102 in a manner substantially identical to that described with respect to FIG. 1.

FIG. 7 shows a simplified block diagram of portions of the described control system for the treadmill (FIG. 2). Pulse data is detected by a pulse clip 36 which is appended to the user as hereinbefore stated. The pulse data is transmitted via conductor 38, through connector 40 and receptacle 42, to the conversion means 43 via conductor 44. As hereinbefore stated, the conversion means 43 converts the pulse data using constants to supply selected display data via conductor 46 to the display means 47.

In operation the user is positioned on a selected exercise machine. The user undertakes to operate the exercise machine by either pedalling, rowing, jogging/running, or the like. The degree of difficulty or resistance being imposed to the performance of the exercise is controlled and adjusted by control means which are here shown to be adjustment knobs 13 (FIG. 1), 96 (FIG. 5) and 110 (FIG. 6). Upon operation of the knob, the user can in turn control his or her own pulse rate and in turn his or her own rate of and total calories burn assuming the average amount of calories are burned for a given degree or quantity of exercise. Using standard conversions, the user may be in a position to control his or her pulse rate and in turn the calories burn rate to secure the maximum benefit from performance of particular exercises.

It is to be understood that the embodiments of the invention of the above described are merely illustrative of the application of the principals of the instant invention. Reference herein to details of the illustrated embodiment is not intended to limit to scope of the claims which themselves recite those features regarded as essential to the invention.

We claim:

1. A control system for controlling an exercise machine having resistance means to resist movement of the user in the performance of exercises, said control system comprising:

control means interconnectable to the resistance means of an exercise machine for consupervisory manual operation by the user during performance of the exercises on said exercise machine without interrupting said performance of the exercises to set said resistance means between an easy configuration in which said resistance means is set for the performance of easy exercises by the user on said exercise machine and a hard configuration in which said resistance means is set for the performance of hard exercises by said user on said exercise machine;

indication means positioned proximate said control means to indicate the relative selection of said control means between said easy configuration and said hard configuration;

pulse detection means interconnectable to said user to detect and supply a pulse signal reflective of the user's pulse while said user is operating said exercise machine;

conversion means connected to receive said pulse signal and to convert said pulse signal into selected biological display data; and

display means interconnected to said conversion means to display said selected biological display data including said pulse signal in real time and positioned for observation by said user while performing exercises on said exercise machine.

2. The control system of claim 1 wherein said selected biological display data includes a rate of calorie burn, wherein said conversion means provides said pulse signal and said rate of calorie burn to said display means, and wherein the display means includes means to display said rate of calorie burn.

3. The control system of claim 2 further including a chassis positionable on said exercise machine, said control means being adapted to said chassis for operation by the user, and said conversion means and said display means also adapted to said chassis.

4. The control system of claim 3 wherein said control means is adapted to control a motorized treadmill having tread and arranged with an incline, wherein said control means includes a speed adjustment means connectable to regulate the speed of the tread and incline adjustment means connectable to operate means to regulate the incline of said treadmill.

5. The control system of claim 4 wherein said indication means includes an inclinometer adapted to said chassis and a scale positioned proximate said inclinometer to indicate the relative inclination of said treadmill.

6. The control system of claim 5 wherein said indication means further includes a scale positioned proximate said speed adjustment to indicate settings between a slow speed and a fast speed.

7. The control system of claim 3 wherein said control means is adapted to control a stationary exercise cycle having a frictional resistance mechanism to frictionally resist movement of pedals of said stationary exercise cycle, wherein said control means further includes frictional adjustment means connectable to said frictional resistance mechanism to vary the amount of friction exerted thereby.

8. A method for controlling an exercise machine having adjustable resistance means to resist movement of the user performing exercises, said method comprising:

providing an exercise machine having adjustable resistance means operable between selected positions to resist movement of the user performing exercises thereon;

13

interconnecting a control means to said adjustable resistance means of the exercise machine;

simultaneously manually operating said control means during performance of the exercises without interrupting said performance of exercises to adjust said resistance means between an easy configuration in which said resistance means is set for the performance of easy exercises by the user on the exercise machine and a hard configuration in which said resistance is set for the performance of hard exercises by the user on the exercise machine;

providing indication means and positioning it proximate said control means to indicate the relative selection of a position of said control means between said easy configuration and said hard configuration;

providing a pulse detector and connecting it to the body of a user to supply a pulse signal reflective of the user's pulse during exercise;

providing conversion means and connecting it to said pulse detector to receive said pulse signal and for generating a calorie burn rate signal and supplying a signal reflective of said calorie burn rate and for supplying said pulse signal;

providing a display means to receive and to display said pulse signal and said calorie burn rate signal and connecting said conversion means thereto to receive said signals reflective of said calorie burn rate and said pulse signal;

causing said conversion means and said display means to operate;

observing said display of said pulse signal and said calorie burn rate, and in response thereto, manually operating said control means as desired and in an uncoordinated manner to adjust said resistance means to another selected position from said hard configuration to said easy configuration to regulate the pulse rate of the user.

* * * * *

14

SA-10

EXHIBIT B TO COMPLAINT – U.S. PATENT NO. 6,019,710

US006019710A

United States Patent [19]

Dalebout et al.

[11] Patent Number: 6,019,710

[45] Date of Patent: Feb. 1, 2000

[54] EXERCISING DEVICE WITH ELLIPTICAL MOVEMENT

[75] Inventors: William T. Dalebout, Logan; Steven Mott, Clinton, both of Utah

[73] Assignee: ICON Health & Fitness, Inc., Logan, Utah

[21] Appl. No.: 09/003,322

[22] Filed: Jan. 6, 1998

[51] Int. Cl.[7] A63B 22/04; A63B 69/16

[52] U.S. Cl. 482/70; 482/51

[58] Field of Search 482/51-53, 57, 482/70, 79, 80, 71

[56] References Cited

U.S. PATENT DOCUMENTS

5,316,384	5/1967	Brown	
5,242,343	9/1993	Miller	482/57
5,383,829	1/1995	Miller	482/57
5,518,473	5/1996	Miller	482/57
5,527,246	6/1996	Rodgers, Jr.	482/57
5,529,555	6/1996	Rodgers, Jr.	482/57
5,542,637	7/1996	Rodgers, Jr.	482/52
5,549,526	8/1996	Rodgers, Jr.	482/57
5,562,574	10/1996	Miller	482/51
5,573,482	11/1996	Rodgers, Jr.	482/57
5,577,985	11/1996	Miller	482/52
5,591,107	1/1997	Rodgers, Jr.	482/57
5,595,371	1/1997	Rodgers, Jr.	482/51
5,595,372	1/1997	Rodgers, Jr.	482/52
5,595,553	1/1997	Rodgers, Jr.	482/51
5,613,256	3/1997	Miller	482/52
5,611,757	3/1997	Rodgers, Jr.	482/57
5,611,758	3/1997	Rodgers, Jr.	482/57
5,637,058	6/1997	Rodgers, Jr.	482/51
5,653,662	8/1997	Rodgers, Jr.	482/52
5,683,333	11/1997	Rodgers, Jr.	482/57
5,685,804	11/1997	Whan-Tong et al.	482/51
5,690,589	11/1997	Rodgers, Jr.	482/57
5,743,834	4/1998	Rodgers, Jr.	482/57
5,788,610	8/1998	Dalebout	482/52
5,919,118	7/1998	Shaw et al.	482/70

FOREIGN PATENT DOCUMENTS

29 19 494 A1 11/1980 Germany

Primary Examiner—S. Crow

Attorney, Agent, or Firm—Workman, Nydegger & Seeley

[57] ABSTRACT

An exercise apparatus includes a base having a support stand upstanding therefrom. A pair of spaced apart foot rails each have a first end and opposing second end. The second end of each foot rail rests on the base of the frame. A pair of stroke rails each have a first end and an opposing second end. The first end of each stroke rail is slidably attached to the support stand of the frame while the second end of each stroke rail is hingedly attached to a corresponding foot rail. An axle of a crank is rotatably mounted to the support stand. A pair of crank arms each orthogonally project from the corresponding ends of the axle in opposing directions. Each remote end of the crank arm is rotatably secured to a corresponding stroke rail between the ends thereof.

34 Claims, 6 Drawing Sheets

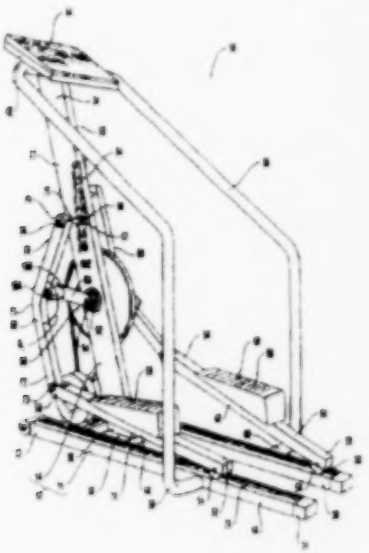

15

SA-11

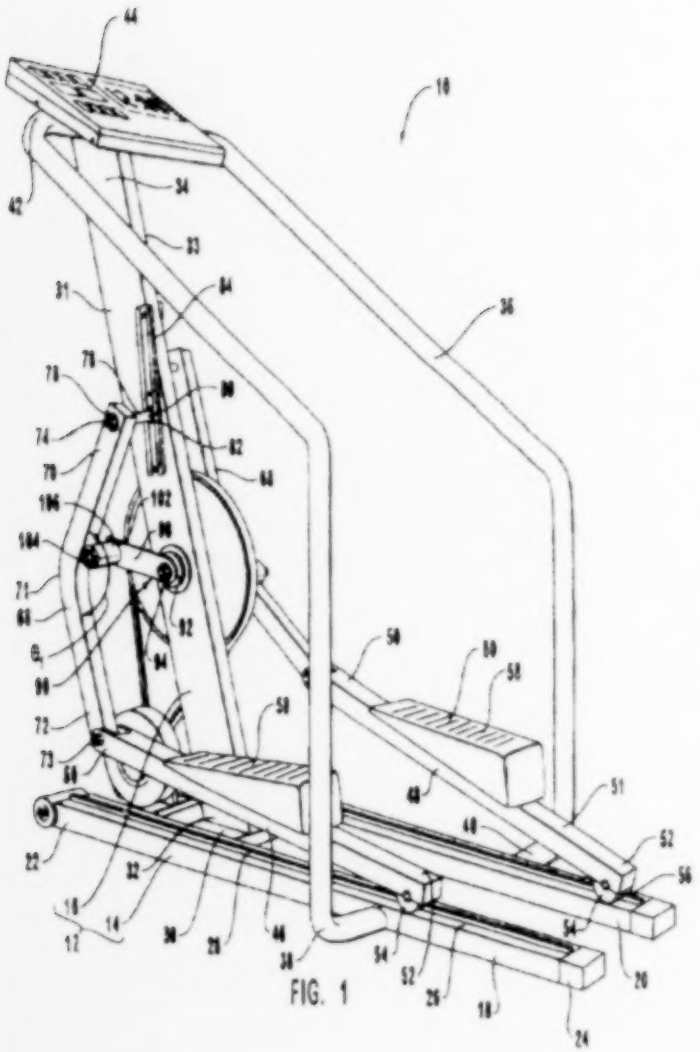

FIG. 1

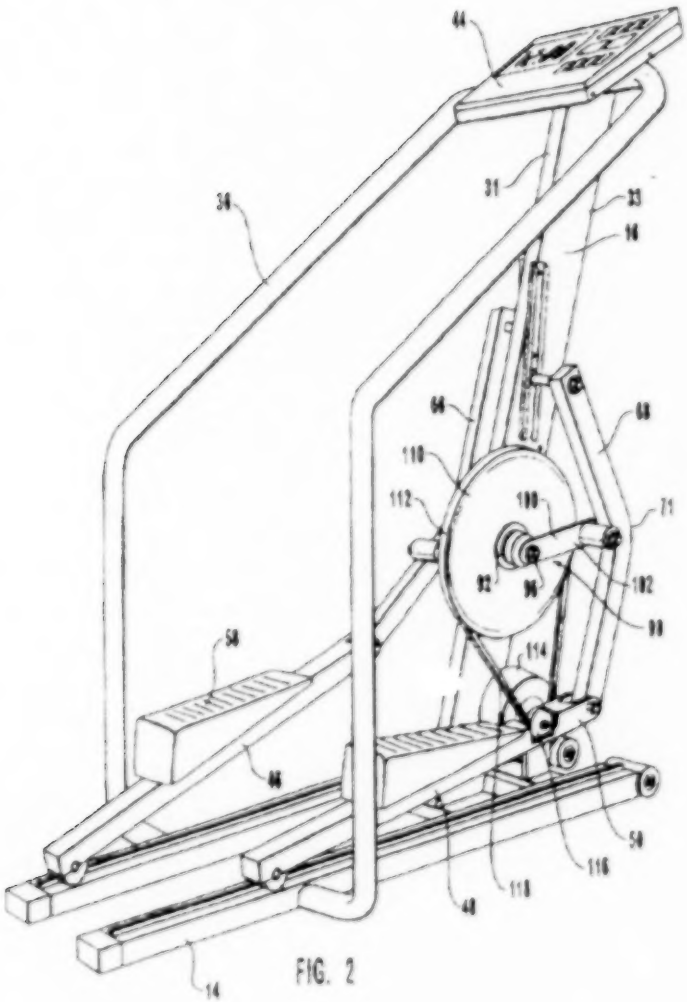
44
31
33
16
36
66
68
110
112
100
71
92
96
102
98
114
58
46
50
116
118
48
14

FIG. 2

SA-13

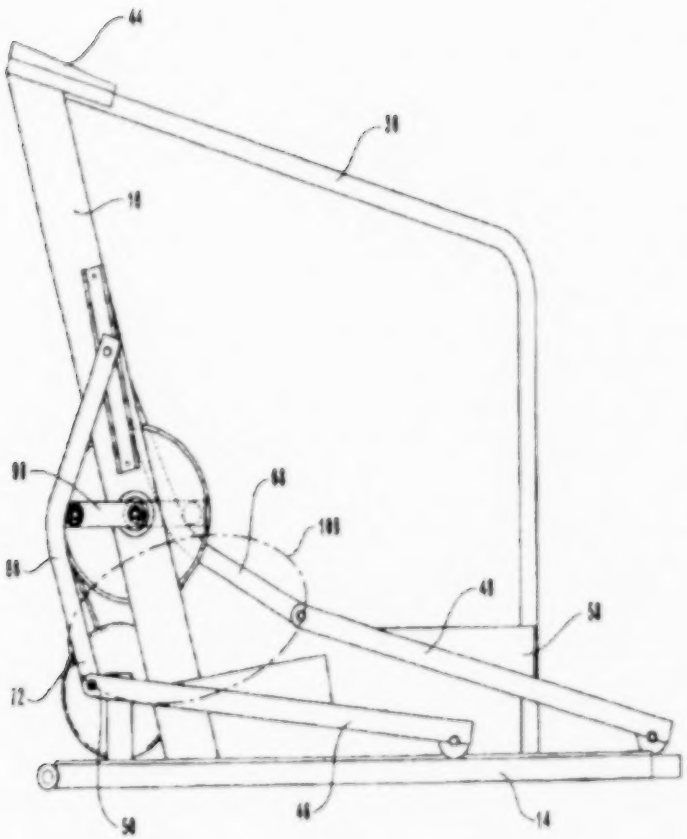

FIG. 3

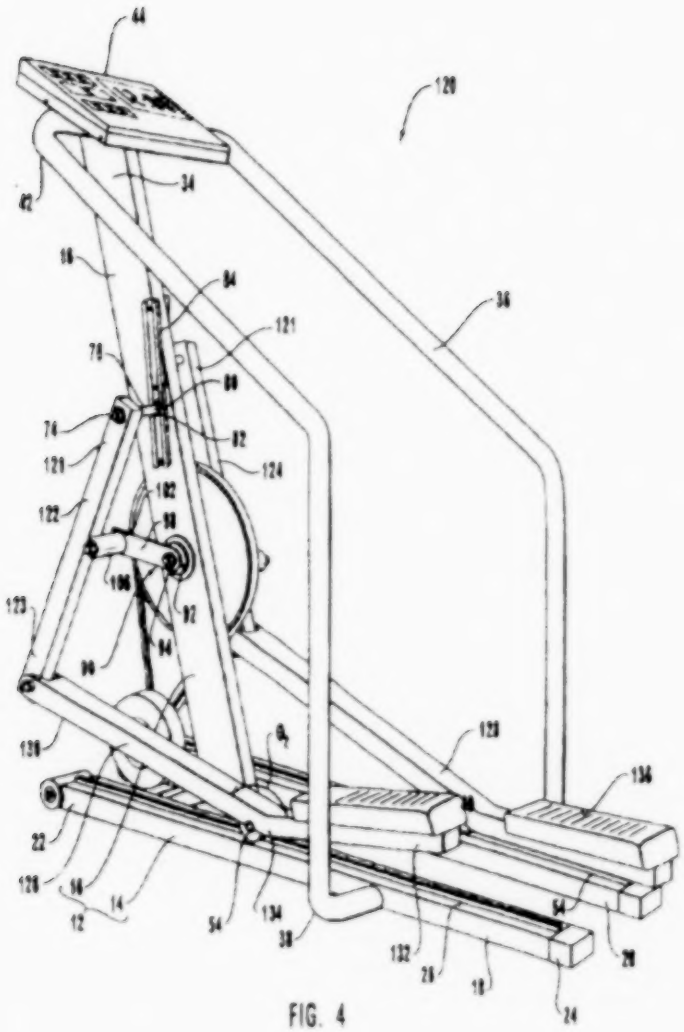

FIG. 4

SA-15

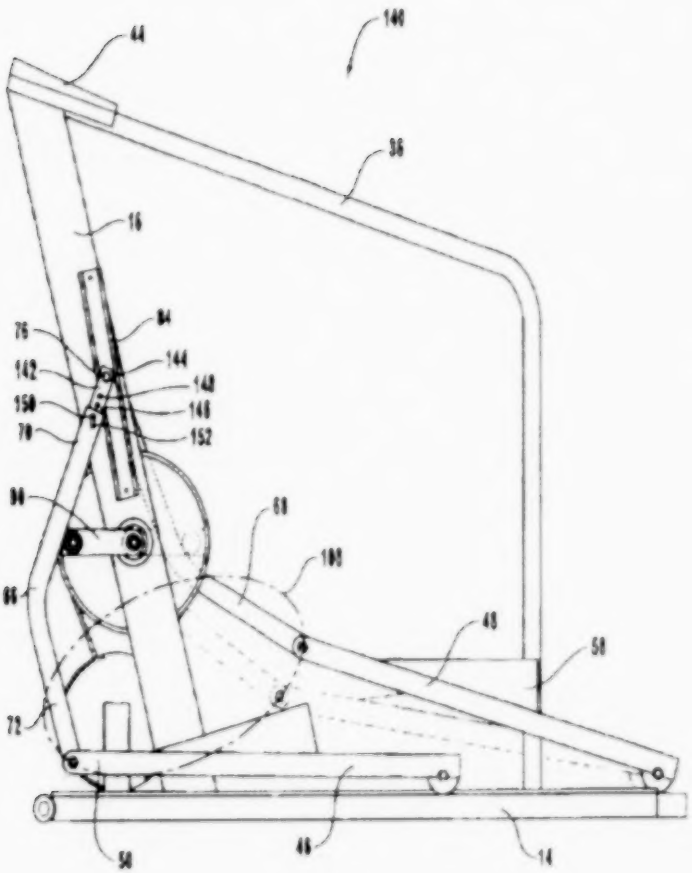
44
140
36
16
76
84
142
144
150
148
70
152
94
68
100
66
48
50
72
58
46
14

FIG. 5

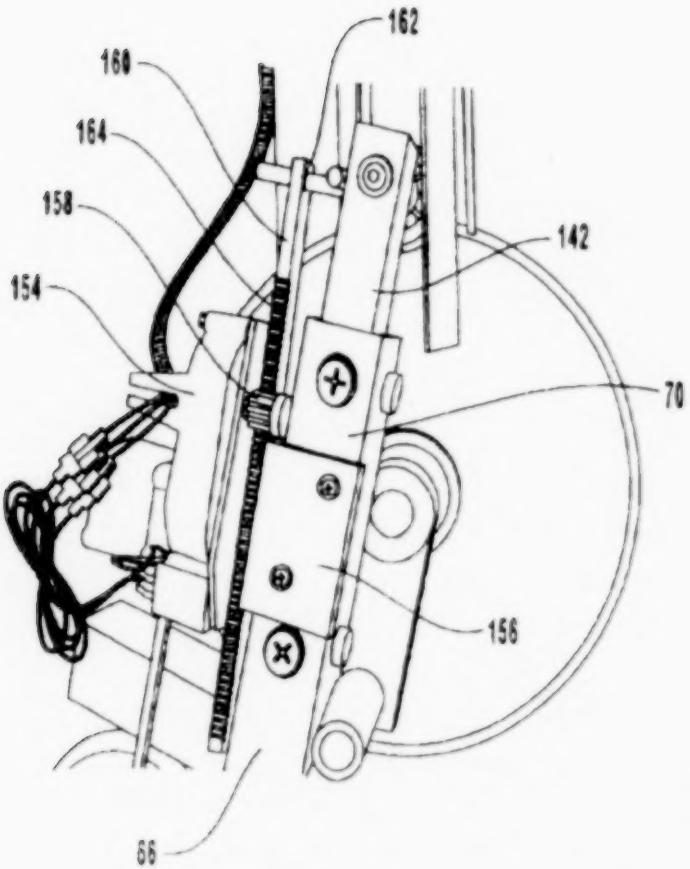

FIG. 6

SA-17

EXERCISING DEVICE WITH ELLIPTICAL MOVEMENT

BACKGROUND OF THE INVENTION

1. The Field of the Invention

The present invention relates to exercise equipment, and, more specifically exercise equipment having elliptical foot displacement.

2. The Relevant Technology

A variety of indoor exercising equipment has been develop to exercise leg muscles commonly used in running, skiing, and other outdoor activities. Such machines include treadmills, stepping machines, and various types of sliding machines. Although effective to some extent, each of these machines has select disadvantages. For example, most treadmills wear quickly under the jarring of heavy jogging or running. Furthermore, treadmills have the drawback of producing high impact on the user's legs and knees. One approach that minimizes jarring is to use a stair stepper. Stair steppers, however, do not develop all of the muscles commonly used in running. Furthermore, such machines are difficult to use in sprint type exercises. Finally, sliding machines require the user to slide their feet back and forth along a horizontal plane. Such movement does not mimic running and thus exercises only a limited range of muscles.

Recent designs in exercise equipment have attempted to resolve some of the above problems by having a pair of spaced apart foot rails wherein each front end rotates in an elliptical path while each rear end moves along a horizontal plane. The center of each foot rail, on which the user's feet are positioned, also rotates in an elliptical path. This elliptical path is substantially similar to that commonly encountered during running. Likewise, since the user's feet never leave the foot rails, minimal impact is produced.

Several problems, however, have been encountered with such designs. For example, such apparatus commonly include a complexity of interrelated moving parts. This complexity increases the cost and time of manufacturing. An additional problem with such machines is that the foot rails operate by traveling over a relatively long transverse distance. As a result, the exercise machine requires a relatively large area to operate, thereby making the machines less practical for home use.

Finally, conventional apparatus are designed so that the foot rails move along a set, predefined path. Users of different heights whose stride does not correspond to the predetermined path of the apparatus can find use of the apparatus to be uncomfortable or even impossible.

OBJECTS AND BRIEF SUMMARY OF THE INVENTION

Accordingly, it is an object of the present invention to provide improved exercise apparatus that produce elliptical foot movement similar to that of running.

Another object of the present invention to provide the above exercise apparatus that have a simpler mechanical design than corresponding prior art designs.

Yet another object of the present invention to provide the above exercise apparatus which require minimal space to operate.

Finally, another object of the present invention is to provide the above exercising apparatus which can be selectively adjusted to match the stride of the user.

To achieve the foregoing objectives, and in accordance with the invention as embodied and broadly described herein, an exercise apparatus is provided. The exercise apparatus includes a frame having a base configured for resting on a ground surface and a support stand upstanding from the base. A hand rail extends from the top of the support stand to each side of the base. Mounted on top of the hand rail above the support stand is a display board. The exercise apparatus further includes a pair of spaced apart, linear foot rails each having a first end and an opposing second end. The second end of each foot rail slidably mounts on the base of the frame. The first end of each foot rail is hingedly attached to the second end of a corresponding stroke rail. Each stroke rail also has a first end slidably attached to the support stand of the frame.

A rotatable crank is also mounted to the support stand. The crank includes an axle rotatably attached to the support stand. A pair of crank arms each orthogonally project from a corresponding end of the axle in opposing directions. Outwardly projecting from each end of the crank arms is a rotatable sleeve. The sleeve is welded or otherwise attached to a corresponding stroke rail between the first and second ends thereof.

During operation, an individual stands on the foot rails and moves their feet in opposing but reciprocating motions. The front end of each foot rail rotates in a substantially elliptical pattern as the result of being hingedly attached to the crank. The second end of each foot rail reciprocates back and forth along the base. The user's feet, disposed between the ends of the foot rails, move in an elliptical pattern, thereby simulating a running motion.

In the preferred design, each stroke rail is formed of a curved member with the crank being mounted at or adjacent to the apex of the curve. By using this configuration, the length of the foot rails is maximized, thereby minimizing the space required to operate the exercise apparatus. In an alternative design, a flywheel can be attached to the axle so as to conserve energy produced by the exercise.

In alternative embodiments, rather than having the stroke rails curved and the foot rails linear, the stroke rails can be linear and each of the foot rails can be curved. The resulting design operates in substantially the same fashion and produces the same effect. Furthermore, rather than having the first end of each stroke rail directly attached to the frame, an adjustment arm can be positioned therebetween. Each adjustment arm includes a first end slidably attached to the frame and a second end slidably received within a corresponding first end of a stroke rail. By extending or retracting the adjustment arm within the corresponding stroke rail, the effective length of the stroke rail is varied. By varying the effective length of the stroke rail, the stride over which the foot rails travel is varied. Accordingly, by selectively positioning each adjustment arm, the path of the foot rails can configured to match the user's stride.

These and other objects, features, and advantages of the present invention will become more fully apparent from the following description and appended claims, or may be learned by the practice of the invention as set forth hereinafter.

BRIEF DESCRIPTION OF THE DRAWINGS

In order that the manner in which the above recited and other advantages and objects of the invention are obtained, a more particular description of the invention briefly described above will be rendered by reference to specific embodiments thereof which are illustrated in the appended drawings. Understanding that these drawings depict only typical embodiments of the invention and are not therefore

to be considered to be limiting of its scope, the invention will be described and explained with additional specificity and detail through the use of the accompanying drawings in which:

FIG. 1 is a left side perspective view of an exercise apparatus;

FIG. 2 is a right side perspective view of the exercise apparatus shown in FIG. 1;

FIG. 3 is a left side view of the exercise apparatus shown in FIG. 1;

FIG. 4 is a left side perspective view of an alternative embodiment of an exercise apparatus having curved foot rails;

FIG. 5 is a left side view of an alternative embodiment of an exercise apparatus having extendable crank arms; and

FIG. 6 is a perspective view of an alternative embodiment for moving the adjustable crank arms as depicted in FIG. 5.

DETAILED DESCRIPTION OF THE PREFERRED EMBODIMENTS

Depicted in FIG. 1 is one embodiment of an inventive exercise apparatus **10** incorporating features of the present invention. Exercise apparatus **10** includes a frame **12** comprising a base **14** and a support stand **16** upstanding therefrom. Base **14** includes a pair of spaced apart, elongated tracks **18** and **20**. Each of tracks **18** and **20** has a top surface **26** extending between a first end **22** and an opposing second end **24**. An alignment ridge **28** upstands from top surface **26** of each track **18** and **20** along the lengths thereof. A cross rail **30** rigidly connects tracks **18** and **20** together.

Support stand **16** has a substantially rectangular transverse cross section with opposing sidewalls **31** and **33**. Sidewalls **31** and **33** longitudinally extend between a base end **32** and an opposing top end **34**. Base end **32** is securely mounted to cross rail **30**.

Mounted to frame **12** is a hand rail **36**. Hand rail **36** has a substantially U-shaped configuration with a first end **38** mounted to the outside of track **18** and a second end **40** mounted to the outside of track **20**. Hand rail **36** also has a center portion **42** secured to top end **34** of support stand **16**. Mounted to center portion **42** over support stand **16** is a display board **44**.

Exercise apparatus **10** further includes a linear foot rail **46** positioned on track **18** and a linear foot rail **48** positioned on track **20**. Each of foot rails **46** and **48** has a top surface **51** extending between a first end **50** and an opposing second end **52**. Positioned on top surface **51** of each foot rail **46** and **48** is a wedge shaped foot pad **58**. Each foot pad **58** is configured such that when attached to the corresponding foot rail **46** and **48**, a top surface **60** of each foot pad **58** is substantially parallel with the ground.

Rotatably mounted to second end **52** of each foot rail **46** and **48** is a wheel **54**. A recessed annular groove encircles each wheel **54**. Wheel **54** of foot rail **46** is positioned on top surface **26** of track **18** such that alignment ridge **28** is received within groove **56**. Wheel **54** of foot rail **48** is likewise positioned on top surface **26** of track **20** such that alignment ridge **28** thereof is received within groove **56**. In this configuration, second end **52** of each foot rail **46** and **48** is free to longitudinally roll along corresponding track **18** and **20** in maintained alignment.

Mounted to first end **50** of foot rail **46** is a curved stroke rail **66**. Curved stroke rail **66** has a first end **70**, an opposing second end **72**, and a curved apex **71** formed therebetween. Curved apex has an inside angle θ, in a range between about 120° to about 170° with about 140° to about 160° being preferred. Second end **72** is hingedly mounted to first end **50** of foot rail **46** by a pin **73**. The present invention also provides attaching means for attaching first end **70** to support stand **16** so as to simultaneously enable annular rotation and linear displacement of first end **70**. By way of example and not by limitation, a pin **76** has a first end **74** transversely extending through first end **70** of stroke rail **66**. A nut **78** attaches to first end **74** of pin **76** to prevent separation of stroke rail **66** therefrom. In this position, first end **70** of stroke rail **66** can freely rotate relative the longitudinal axis of pin **76**.

Pin **76** also has a second end **80** with a flared head **82** positioned thereat. Flared head **82** is slidably captured within a C-shaped channel **84** that is mounted on support stand **16**. First end **70** of stroke rail **66** is thus linearly displaced as pin **76** is slidably moved within channel **84**.

As depicted in FIG. 2, a curved stroke rail **68** extends between first end **50** of foot rail **48** and support stand **16**. Stroke rail **68** has the same configuration as stroke rail **66** and is attached to foot rail **48** and support stand **16** using the same structures as discussed above with regard to stroke rail **66**. Accordingly, like structural elements between stroke rails **66** and **68** and how they are attached are identified by like reference characters.

The present invention also includes connecting means for connecting each stroke rail **66** and **68** to frame **12** such that linear reciprocating displacement of first end **70** of each stroke rail **66** and **68** results in displacement of second end **72** of each stroke rail **66** and **68** in a substantially elliptical path. By way of example and not by limitation, as depicted in FIGS. 1 and 2, a crank **90** is disclosed. Crank **90** includes an axle **92** extending through support stand **16** and being rotatably mounted thereto. Axle **92** has a first end **94** projecting from side **31** of support stand **16** and an opposing second end **96** projecting from side **33** of support stand **16**.

A first crank arm **98** is rigidly attached to and orthogonally projects from end **94** of axle **92**. A second crank arm **100** is rigidly attached to and orthogonally projects from end **96** of axle **92**. Crank arms **98** and **100** project in opposing directions.

The connecting means also includes coupling means for coupling each crank arm **98** and **100** to a corresponding stroke rail **64** and **66** so as to enable free rotation of axle **92**. By way of example and not by limitation, each crank arm **98** and **100** terminates at a distal end **102**. Outwardly projecting from distal end **102** of first crank arm **98** is substantial parallel alignment with axil **92** is a pin **104**. Freely encircling pin **104** is a collar **106**. In turn, collar **106** is spot welded or otherwise secured to stroke rail **66** at or adjacent to apex **71**.

In like manner, outwardly projecting from distal end **102** of second crank arm **100** in substantial parallel alignment with axil **92** is a pin **105**. Freely encircling pin **105** is a collar **107**. Collar **107** is spot welded or otherwise secured to stroke rail **68** at or adjacent to apex **71**. Crank **90** thus interconnects stroke rails **64** and **66** while still enabling annular rotation of axil **92**. As a result of stroke rails **66** and **68** being curved, as opposed to straight, the effective length of foot rails **46** and **48** can be decreased, thereby minimizing the space that exercise apparatus **10** occupies.

During use, an individual faces display board **44** with their feet positioned on corresponding foot pads **58**. Foot rails **46** and **48** on which foot pads **58** are mounted are located in displaced or offset position relative to each other as a result of crank arms **98** and **100** projecting in opposing directions. Specifically, as depicted in FIG. 1, with crank

arm 98 rotated into a forward position, second end 52 of foot rail 46 is advanced into a forward position while first end 70 of stroke rail 66 is disposed into a lowered position. Simultaneously, second crank arm 100 is oriented in a rearward position with second end 52 of foot rail 48 advanced into a rearward position and first end 70 of stroke rail 68 advanced into an upward position.

As a user applies a down and rearward force on foot pad 58 overlying foot rail 46, crank 90 rotates 180° causing stroke rail 66 and 68 and foot rails 46 and 48 to simultaneously reverse their relative positioned as depicted in FIG. 2. A similar force can then be applied to foot pad 58 overlying foot rail 48, thereby enabling continuous reciprocating displacement of the relative components. During this continued reciprocating motion, the hinged connection between first end 50 of each foot rail 44 and 46 and second end 72 of each stroke rail 66 and 68 rotates in a substantially elliptical path as depicted by dash line 108 in FIG. 3. This elliptical path results in each foot pad 58 also traveling in a substantially elliptical path similar to that occurring during walking or jogging.

In one embodiment of the present invention, means are also provided for conserving momentum generated by rotation of crank 90. As depicted in FIG. 2, by way of example and not by limitation, mounted on axle 92 is an enlarged annular flywheel 110 having a grooved annular edge 112. A weighted wheel 114 is rotatably attached to frame 12 adjacent to flywheel 110. Attached to the side of weighted wheel 114 in axle alignment therewith is a drive wheel 116. A belt 118 loops between flywheel 110 and drive wheel 116. Accordingly, as axle 92 is rotated, flywheel 110 is simultaneously rotated. This force is transferred through belt 118 to drive wheel 116. In turn, weighted wheel 114 is rotated. As a result of the increased weight of wheel 114, once wheel 114 begins to rotate, the force produced therein is transferred back into flywheel 110 to maintain even, continued reciprocating displacement of stroke rails 64 and 66.

Depicted in FIG. 4 is an alternative embodiment of an inventive exercise apparatus 120. Exercise apparatus 10 and 120 operate in substantially the same way and share many of the same structural elements. Accordingly, like structural elements between exercise apparatus 10 and 120 are identified by like reference characters. In contrast, however, curved stroke rails 64 and 68 of exercise apparatus 10 are replaced by corresponding linear stroke rails 122 and 124. Stroke rails 122 and 124 each have a first end 121 slidably attached to support stand 16 and an opposing second end 123. Furthermore, linear foot rails 46 and 48 of exercise apparatus 10 are replaced by corresponding curved foot rails 126 and 128. Each curved foot rail 126 and 128 has a first end 130, an opposing second end 132, and a curved apex 134 positioned therebetween. First end 130 of each rail 126 and 128 is hingedly attached to a second end 123 of a corresponding stroke rail 122 and 124. Curved apex 134 has an inside angle θ_2 in a range between about 120° to about 170° with about 140° to about 160° being preferred. Mounted at or adjacent to apex 134 is wheel 54 which rides on a corresponding track 18 or 20. Mounted on second end 132 of each foot rail 126 and 128 is a foot pad 134 for receiving a corresponding foot of a user.

Exercise apparatus 120 has many of the same benefits as exercise apparatus 10. For example, compared to conventional apparatus, exercise apparatus 120 has a relatively simple mechanical configuration and requires minimal operating space. Furthermore, operation of exercise apparatus 120, which is the same as that previously discussed with exercise apparatus 10, produces a substantially elliptical displacement of foot pads 134, thereby simulating the movement of walking or running.

Depicted in FIG. 5 is yet another alternative embodiment of an exercise apparatus 140. Exercise apparatus 140 is substantially similar to exercise apparatus 10. Accordingly, like structural elements between exercise apparatus 10 and 140 are identified by like reference characters.

In one embodiment of the present invention, means are provided for selectively varying the size of the substantially elliptical path that second end 72 of each stroke rail 66 and 68 travels. By way of example and not by limitation, in contrast to exercise apparatus 10, slidably received with first end 70 of each curved stroke rail 66 and 68 is an adjustment arm 142. Each adjustment arm 142 has a first end 144 from which pin 76 projects for slidable attachment with channel 84. Each adjustment arm 142 also has an opposing second end 146 that is slidably disposed within first end 70 of each stroke rail 66 and 68.

The present invention also includes means for selectively positioning each adjustment arm 142 relative to a corresponding stroke rail 66 and 68. By way of example and not by limitation, a plurality of holes 148 extend through adjustment arm 142 along the length thereof. A complementary hole 150 likewise passes through first end 70 of each stroke rail 66 and 68. Once adjustment arm 142 is slid to a desired position, a pin 152 is passed through aligned holes 150 and 148 so as to securely retain adjustment arm 142 in the desired position.

By selectively extending each adjustment arm 142 out of a corresponding stroke rail 66 and 68 or retracting each adjustment arm 142 into a corresponding stroke rail 66 and 68, the effective length of each stroke rail 66 and 68 varies. As the effective length varies, the size of the elliptical path that second end 72 of stroke rails 66 and 68 travel varies. That is, as the effective length increases, the diameter of the elliptical path increases. Conversely, as the effective length decreases, the diameter of the elliptical path decreases. The size of the elliptical path that foot pads 58 travel varies correspondingly to the elliptical path at second end 72 of stroke rails 66 and 68. Accordingly, by varying the effective length of stroke rails 66 and 68, the path that foot pads 58 travel can be selected to correspond to the stride of the user.

There are a variety of alternative embodiments of the means for selectively varying the size of the substantially elliptical path that second end 72 of each stroke rail 66 and 68 travels. By way of example, stroke rails 66 and 68 can be extended at either end or in the middle. Furthermore, the lengths of foot rail 46 and 48 can also be selectively varied.

Depicted in FIG. 6 is an alternative embodiment of the means for positioning adjustment arm 142 relative to a corresponding stroke rail. As disclosed therein, an electric motor 154 is mounted to second end 70 of stroke rail 66 by a bracket 156. Rotatably extending from motor 154 is a gear 158. An elongated engagement bar 160 has a first end 162 secured to adjustment arm 142 and a plurality of teeth 164 extending along the length thereof. Engagement bar 160 is biased against gear 158 such that teeth 164 engage with gear 158. Accordingly, as motor 154 is energized by a switch, gear 158 is selectively rotated clockwise or counter clockwise. In turn, this rotation selectively raises or lowers engagement bar 160 which in turn selectively raises or lowers adjustment arm 142 relative to stroke arm 66.

In the preferred embodiment, a complementary assembly of the motor 154 and engagement bar 160 are attached to stroke rail 68. Each of the motors 154 can thus simultaneously engage to simultaneously adjust each adjustment arm 142 a desired distance.

The present invention may be embodied in other specific forms without departing from its spirit or essential characteristics. The described embodiments are to be considered in all respects only as illustrative and not restrictive. The scope of the invention is, therefore, indicated by the appended claims rather than by the foregoing description. All changes which come within the meaning and range of equivalency of the claims are to be embraced within their scope.

What is claimed and desired to be secured by United States Letters Patent is:

1. An exercise apparatus comprising:

(a) a frame configured for resting on a ground surface;

(b) a pair of spaced apart foot rails each having a first end and an opposing second end, each foot rail being configured to receive a corresponding foot of a user;

(c) a pair of stroke rails each having a first end and an opposing second end, the second end of each stroke rail being hingedly attached to the first end of a corresponding foot rail;

(d) means for connecting each stroke rail to the frame such that linear reciprocating displacement of the first end of each stroke rail results in displacement of the second end of each stroke rail in a substantially elliptical path; and

(e) means for selectively varying the size of the substantially elliptical path that the second end of each stroke rail travels.

2. An exercise apparatus as recited in claim 1, wherein the means for connecting comprises:

(i) an axle having opposing ends, the axil being rotatably mounted to the frame;

(ii) a crank arm rigidly mounted on each opposing end of the axil; and

(iii) means for coupling each crank arm to a corresponding stroke rail so as to enable free rotation of the axle.

3. An exercise apparatus as recited in claim 2, wherein the means for coupling comprises:

(i) a pin projecting from each crank arm; and

(ii) a tubular sleeve rotatably disposed over each pin, each tubular sleeve being rigidly secured to a corresponding stroke rail.

4. An exercise apparatus as recited in claim 2, further comprising means for conserving momentum generated by rotation of the axil.

5. An exercise apparatus as recited in claim 4, wherein the means for conserving momentum comprises:

(a) a flywheel mounted to the axis;

(b) a weighted wheel rotatably mounted to the frame; and

(c) a belt extending from the flywheel to the weighted wheel.

6. An exercise apparatus as recited in claim 1, wherein the means for selectively varying comprises a pair of adjustment arms each having a first end slidably mounted to the frame and an opposing second end adjustably mounted to the first end of a corresponding stroke rail.

7. An exercise apparatus as recited in claim 1, wherein the frame comprises a pair of spaced apart tracks and a support stand upstanding therebetween.

8. An exercise apparatus as recited in claim 1, wherein the first end of each stroke rail is slidably attached to the frame.

9. An exercise apparatus as recited in claim 1, wherein each stroke rail is curved.

10. An exercise apparatus as recited in claim 1, wherein each foot rail is curved.

11. An exercise apparatus as recited in claim 1, further comprising a wheel mounted on each foot rail and disposed on the frame.

12. An exercise apparatus comprising:

(a) a frame configured for resting on a ground surface and having an support stand;

(b) a pair of spaced apart foot rails each having a first end and an opposing second end, each foot rail being configured to receive a corresponding foot of a user;

(c) a pair of stroke rails each having a first end and an opposing second end, the first end of each stroke rail being slidably attached to the support stand of the frame, the second end of each stroke rail being hingedly attached to the first end of a corresponding foot rail; and

(d) means for connecting each stroke rail to the frame such that linear reciprocating displacement of the first end of each stroke rail results in displacement of the second end of each stroke rail in a substantially elliptical path.

13. An exercise apparatus as recited in claim 12, wherein the means for connecting comprises:

(i) an axle having opposing ends, the axil being rotatably mounted to the frame;

(ii) a crank arm rigidly mounted on each opposing end of the axle; and

(iii) means for coupling each crank arm to a corresponding stroke rail so as to enable the axil to continue to freely rotate.

14. An exercise apparatus as recited in claim 13, wherein the means for coupling comprises:

(i) a pin projecting from each crank arm; and

(ii) a tubular sleeve rotatably disposed over each pin, each tubular sleeve being rigidly secured to a corresponding stroke rail.

15. An exercise apparatus as recited in claim 13, further comprising means for conserving momentum generated by rotation of the axle.

16. An exercise apparatus as recited in claim 12, wherein each stroke rail is curved.

17. An exercise apparatus as recited in claim 12, wherein each foot rail is curved.

18. An exercise apparatus as recited in claim 12, further comprising a wheel mounted on each foot rail and disposed on the frame.

19. An exercise apparatus as recited in claim 12, wherein the second end of each foot rail is freely suspended above a portion of the frame.

20. An exercise apparatus as recited in claim 12, further comprising a foot pad mounted on each foot rail.

21. An exercise apparatus as recited in claim 12, further comprising a hand rail attached to the support stand of the frame.

22. An exercise apparatus as recited in claim 12, further comprising a pair of adjustment arms each having a first end slidably mounted to the frame and an opposing second end adjustably mounted to the first end of a corresponding stroke rail.

23. An exercise apparatus comprising:

(a) a frame configured for resting on a ground surface and having a support stand;

(b) first and second crank arms rotatably mounted to the support stand of the frame, the crank arm rotating about a fixed axis;

(c) first and second foot rails having a first end and an opposing second end, a portion of the first foot rail movably resting on the frame;

(d) stroke means extending between the crank arms and the hingedly attached to said four rails & for rotating

the end of the first foot rails in a substantially elliptical path when the crank arms are rotated in a circular path.

24. An exercise apparatus as recited in claim 23, wherein the stroke means comprises a first stroke rail having a first end and an opposing second end, the second end of the first stroke rail being hingedly attached to the first end of the first foot rail, the crank arm being attached to the first stroke rail between the first end and the second end thereof, the crank arm being attached so as to enable rotation of the crank arm.

25. An exercise apparatus as recited in claim 24, further comprising an adjustment arm having a first end slidably mounted to the frame and an opposing second end adjustably mounted to the first stroke rail.

26. An exercise apparatus as recited in claim 23, further comprising means for conserving momentum generated by rotation of the crank arm.

27. An exercise apparatus as recited in claim 24, wherein the first stroke rail is linear and the first foot rail is curved.

28. An exercise apparatus as recited in claim 24, wherein the first stroke rail is curved and the first foot rail is linear.

29. An exercise apparatus as recited in claim 23, further comprising:

(a) a second crank arm rotatably mounted to the support stand of the frame, the second crank arm rotating about a fixed axis;

(b) a second foot rail having a first end and an opposing second end; and

(c) a second stroke rail having a first end slidably attached to the support stand of the frame and a second end hingedly attached to the first end of the second foot rail, the second crank being attached to the second stroke rail between the first and second ends thereof.

30. An exercise apparatus comprising:

(a) a frame comprising a base configured for resting on a ground surface and an support stand;

(b) a pair of spaced apart foot rails each having a first end and an opposing second end, a portion of each foot rail resting on the base of the frame;

(c) a pair of adjustment arms each having a first end slidably attached to the support stand and an opposing second end;

(d) a pair of stroke rails each having a first end and an opposing second end, the second end of each stroke rail being hingedly attached to the first end of a corresponding foot rail; and

(e) means for adjustably attaching the second end of the adjustment arm to a corresponding stroke rail.

31. An exercise apparatus as recited in claim 30, wherein the means for adjustable attaching comprises the second end of each adjustment arm being configured to be received within the first end of a corresponding stroke rail.

32. An exercise apparatus as recited in claim 30, further comprising a rotatable crank including:

(i) an axil having opposing ends, the axle being rotatably mounted to the support stand of the frame;

(ii) a pair of crank arms each orthogonally projecting from a corresponding end of the axle in opposing directions; and

(iii) means for coupling each crank arm to a corresponding stroke rail between the first and second end of the corresponding stroke rail such that as the second end of each foot rail reciprocates in a lateral movement, the first end of each foot rail moves in an elliptical path.

33. An exercise apparatus as recited in claim 30, wherein each of the stroke rails are curved.

34. An exercise apparatus as recited in claim 30, wherein each of the foot rails are curved.

* * * * *

UNITED STATES PATENT AND TRADEMARK OFFICE

CERTIFICATE OF CORRECTION

PATENT NO. : 6,019,710

DATED : Feb. 1, 2000

INVENTOR(S) : William T. Dalehout; Steven Mott

It is certified that error appears in the above-identified patent and that said Letters Patent are hereby corrected as shown below:

Col. 1, line 12, change "develop" to --developed--

Col. 1, line 56, after "invention" insert --is--

Col. 1, line 60, after "invention" insert --is--

Col. 2, line 52, after "can" insert --be--

Col. 4, line 40, after "from" insert --second--

Col. 4, line 49, after "with" change "axil" to --axle--

Col. 4, line 58, change "axil" to --axle--

Col. 5, line 11, after "relative" change "positioned" to --position--

Col. 6, line 62, after "stroke" change "arm" to --rail--

Col. 6, line 67, change "arms" to --arm--

Col. 7, line 29, change "axil" to --axle--

Col. 7, line 32, change "axil" to --axle--

Col. 7, line 44, change "axil" to --axle--

Col. 8, line 3, after "having" change "an" to --a--

27

UNITED STATES PATENT AND TRADEMARK OFFICE

CERTIFICATE OF CORRECTION

PATENT NO. : 6,319,718

DATED : Feb. 1, 2000

INVENTOR(S) : William T. Dalebout; Steven Mott

It is certified that error appears in the above-identified patent and that said Letters Patent are hereby corrected as shown below:

Col. 8, line 20, change "xzll" to --axle--

Col. 8, line 25, change "xzll" to --axle--

Col. 8, line 67, after "said" change "four rails d" to --first foot rail--

Col. 9, line 1, after "the" insert --first-- and after "foot" change "rails" to --rail--

Col. 9, line 2, after "circular" change "path." to --path; wherein said stroke means is slidably mounted to the frame--

Col. 9, line 36, after "and" change "xz" to --a--

Col. 10, line 20, after "an" change "xzll" to --axle--

Signed and Sealed this

Third Day of April, 2001

Attest:

Nicholas P. Godici

NICHOLAS P. GODICI

Attesting Officer

Acting Director of the United States Patent and Trademark Office

28

Sterling A. Brennan (CASB 12601)
Workman Nydegger P.C.
60 East South Temple, Suite 1000
Salt Lake City, UT 84111
Telephone (801) 533-9800
Facsimile (801) 328-1707

UNITED STATES DISTRICT COURT
CENTRAL DISTRICT OF CALIFORNIA

ICON HEALTH & FITNESS, INC., a Delaware corporation, PLAINTIFF(S)	CASE NUMBER **SACV08-00437 CJC (RNBx)**
v.	
OCTANE FITNESS, LLC, a Minnesota limited liability company, and NELLIE'S EXERCISE EQUIPMENT, INC., a California corporation, DEFENDANT(S).	**SUMMONS**

TO:DEFENDANT(S): OCTANE FITNESS, LLC and NELLIE'S EXERCISE EQUIPMENT, INC.

A lawsuit has been filed against you.

Within 20 days after service of this summons on you (not counting the day you received it), you must serve on the plaintiff an answer to the attached ☒ complaint ☐ ____ amended complaint ☐ counterclaim ☐ cross-claim or a motion under Rule 12 of the Federal Rules of Civil Procedure. The answer or motion must be served on the plaintiff's attorney, Sterling A. Brennan, whose address is 1000 Eagle Gate Tower, 60 East South Temple, Salt Lake City, Utah 84111. If you fail to do so, judgment by default will be entered against you for the relief demanded in the complaint. You also must file your answer or motion with the court.

Clerk, U.S. District Court

Dated: APR 23 2008

By: _____
Deputy Clerk

(Seal of the Court)

[Use 60 days if the defendant is the United States or a United States agency, or is an officer or employee of the United States. Allowed 60 days by Rule 12(a)(3)]

American LegalNet, Inc.
www.USCourtForms.com

SA-25

EXHIBIT A TO ICON'S SUPPLEMENTAL CLAIM CHART –
OCTANE'S ENGINEERING DRAWINGS

[REDACTED

]

[REDACTED

]

[REDACTED

]

[REDACTED

]

SA-29

REDACTED

[REDACTED

]

SA-31

[REDACTED]

[REDACTED]

SA-33

[REDACTED]

[REDACTED]

SA-35

[REDACTED

]

[REDACTED]

SA-37

[REDACTED

]

[REDACTED]

SA-39

[REDACTED]

[REDACTED]

SA-41

[REDACTED]

[REDACTED]

SA-43

[REDACTED]

[REDACTED]

SA-45

[REDACTED

]

[REDACTED

]

SA-47

[REDACTED]

SA-48

[REDACTED]

SA-49

DRAWING – J. RASTY DEPOSITION EXHIBIT 5

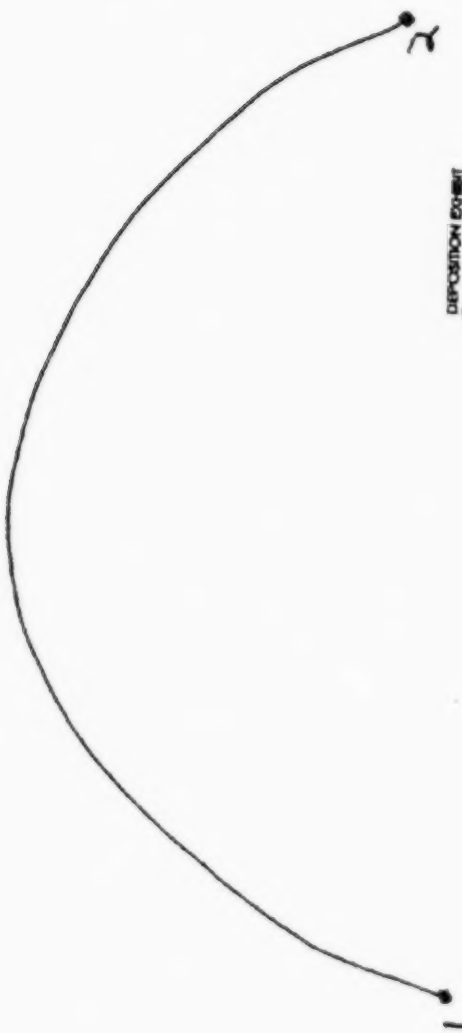

DEPOSITION EXHIBIT
Rasty 5
KW 5.4.10

EXHIBIT
15

SA-50

DRAWING – J. RASTY DEPOSITION EXHIBIT 6

DEPOSITION EXHIBIT
Rasty 6
KW 5.4.10

EXHIBIT
16

SA-51

DRAWING – J. RASTY DEPOSITION EXHIBIT 7

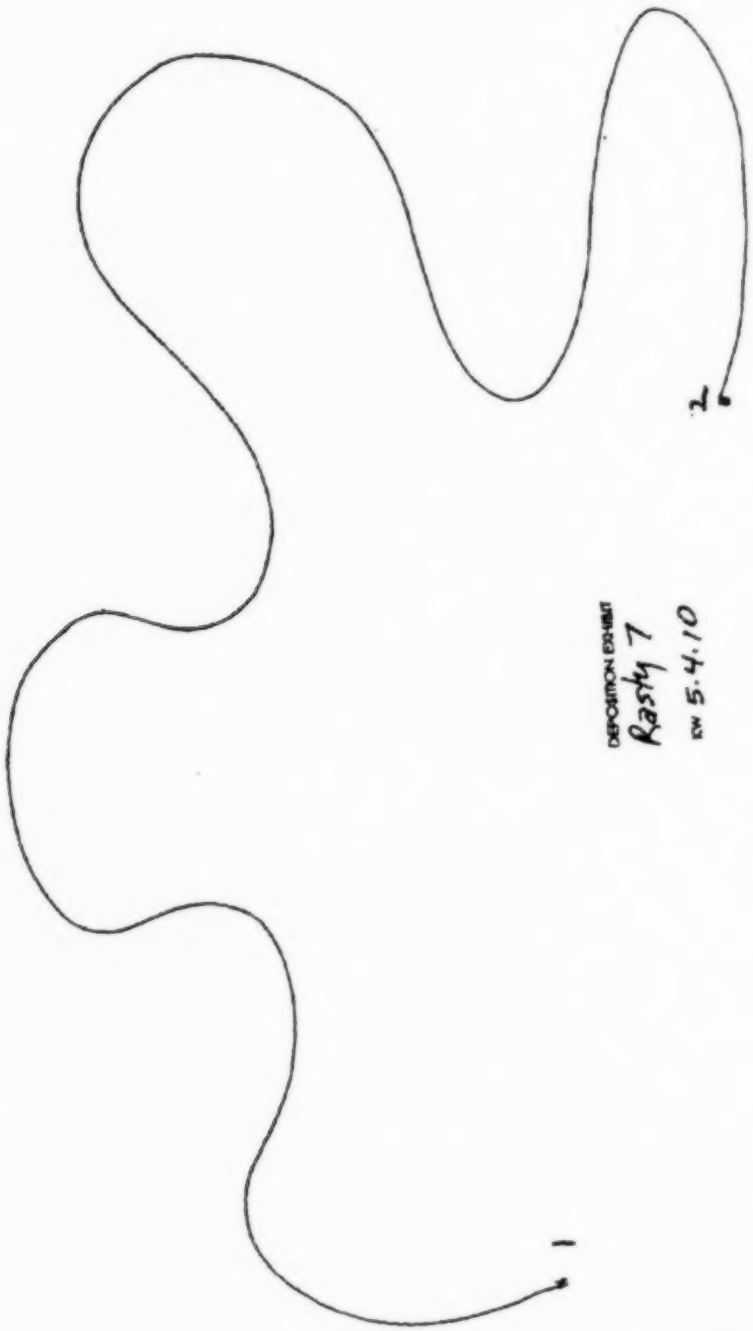

DEPOSITION EXHIBIT
Rasty 7
5.4.10

EXHIBIT
17

SA-52

DRAWING – J. RASTY DEPOSITION EXHIBIT 8

DEPOSITION EXHIBIT
RASTY 8
5.4.10

EXHIBIT
18

SA-53

U.S. PATENT NO. 5,707,321

US005707321A

United States Patent [19]

Maresh

[11] **Patent Number: 5,707,321**

[45] **Date of Patent: Jan. 13, 1998**

[54] **FOUR BAR EXERCISE MACHINE**

[76] Inventor: **Joseph Douglas Maresh**, P.O. Box 645, West Linn, Oreg. 97068-0645

[21] Appl. No.: **497,377**

[22] Filed: **Jun. 30, 1995**

[51] **Int. Cl.**[6] **A63B 22/00**

[52] **U.S. Cl.** **482/57**; 482/51

[58] **Field of Search** 482/51, 52, 53, 482/57, 79, 80, 148, 63

[56] **References Cited**

U.S. PATENT DOCUMENTS

4,509,742	4/1985	Cason	272/73
4,564,206	1/1986	Lenhardt	280/252
4,869,494	9/1989	Lambert	272/73
4,949,954	8/1990	Hix	272/73
5,242,343	9/1993	Miller	482/57
5,261,294	11/1993	Tiesr et al	74/594.1
5,279,529	1/1994	Eschenbach	482/57
5,290,211	3/1994	Stearns	482/70
5,299,995	4/1994	Habing	482/51
5,374,227	12/1994	Webb	482/52
5,383,829	1/1995	Miller	482/57
5,419,572	5/1995	Stiller et al	280/252
5,518,473	5/1996	Miller	482/52

Primary Examiner—Stephen R. Crow

[57] **ABSTRACT**

An exercise machine for exercising the lower body, the upper body, or both simultaneously. The mechanism consists of a crank, a rocker, a connector link, and a stationary fourth link so arranged as to cause a portion of the connector link to travel about a closed curve resembling an ellipse, a tear drop shape, or any variation thereof. A flywheel and/or force resisting means may be added to provide inertial characteristics and drag resistance to the operator.

14 Claims, 12 Drawing Sheets

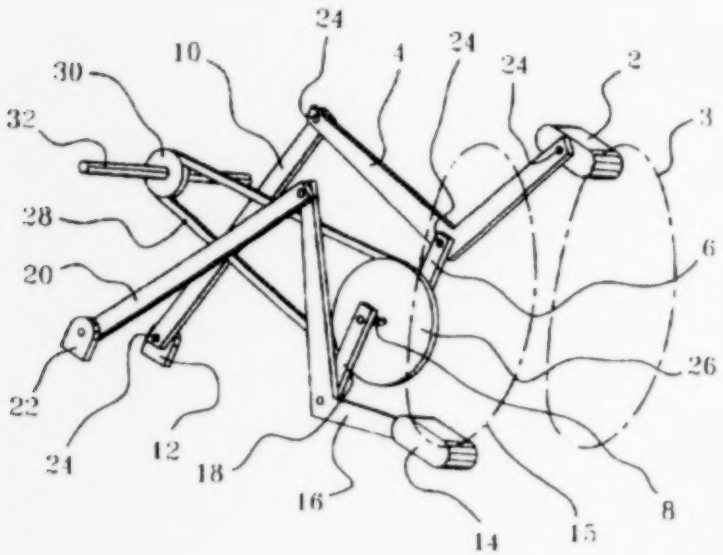

FIG. 1

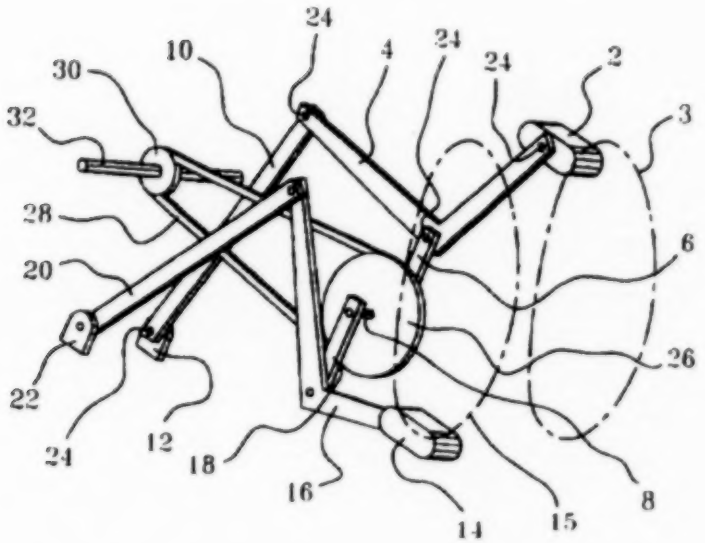
24
10
4
24
24
2
30
3
32
28
6
20
26
22
24
12
18
16
14
15
8

FIG. 2

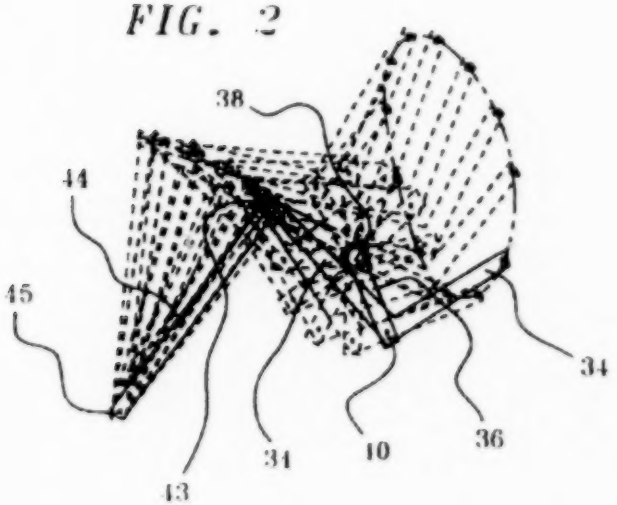
38
44
45
34
43
34
10
36

FIG. 3

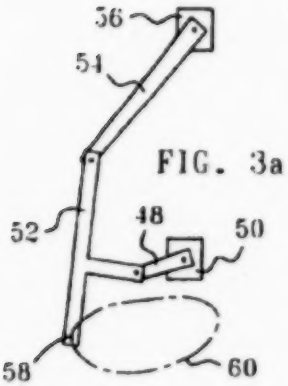

FIG. 3a

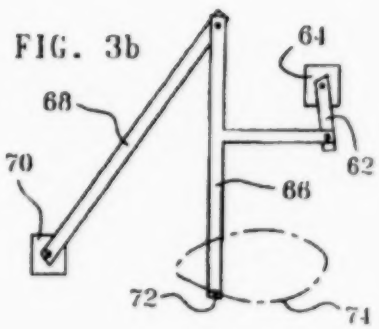

FIG. 3b

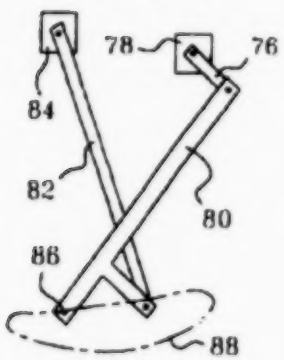

FIG. 3c

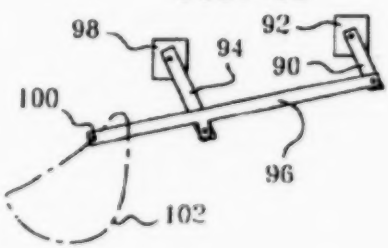

FIG. 3d

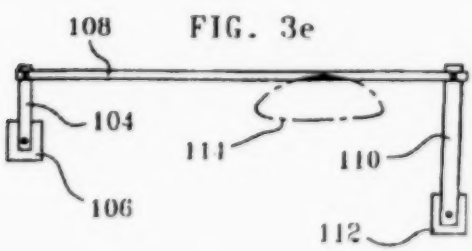

FIG. 3e

FIG. 4

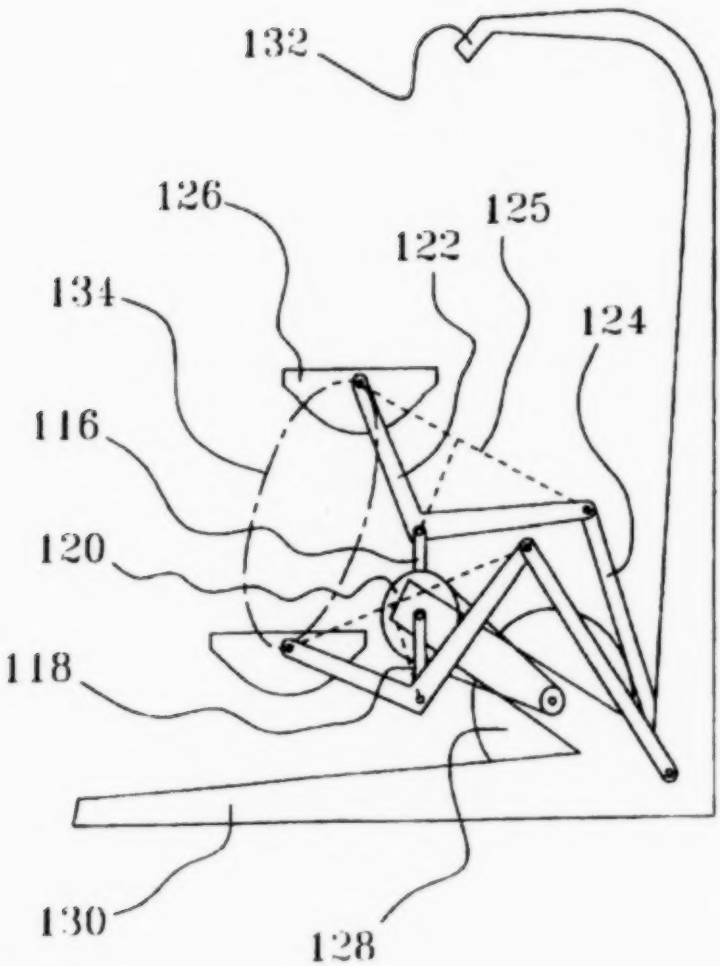

FIG. 5

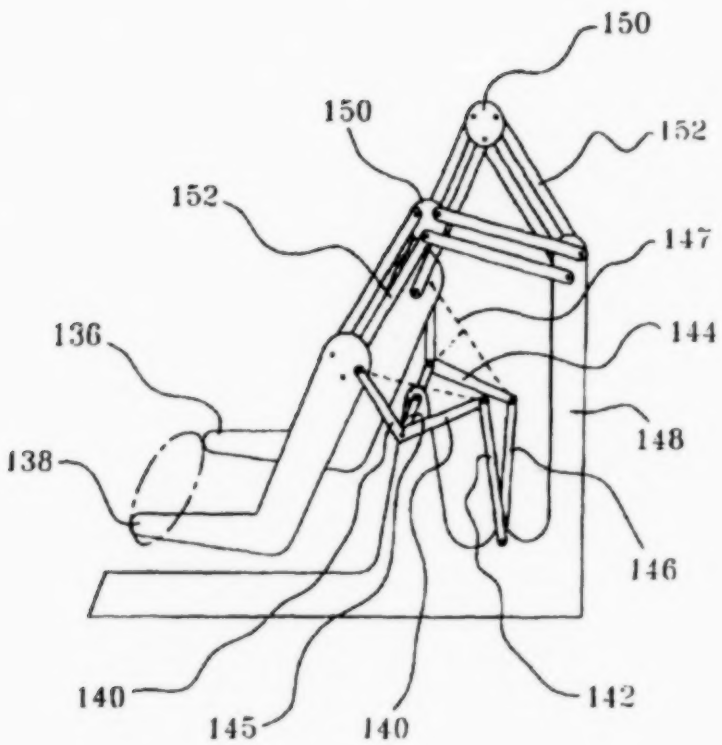

FIG. 6

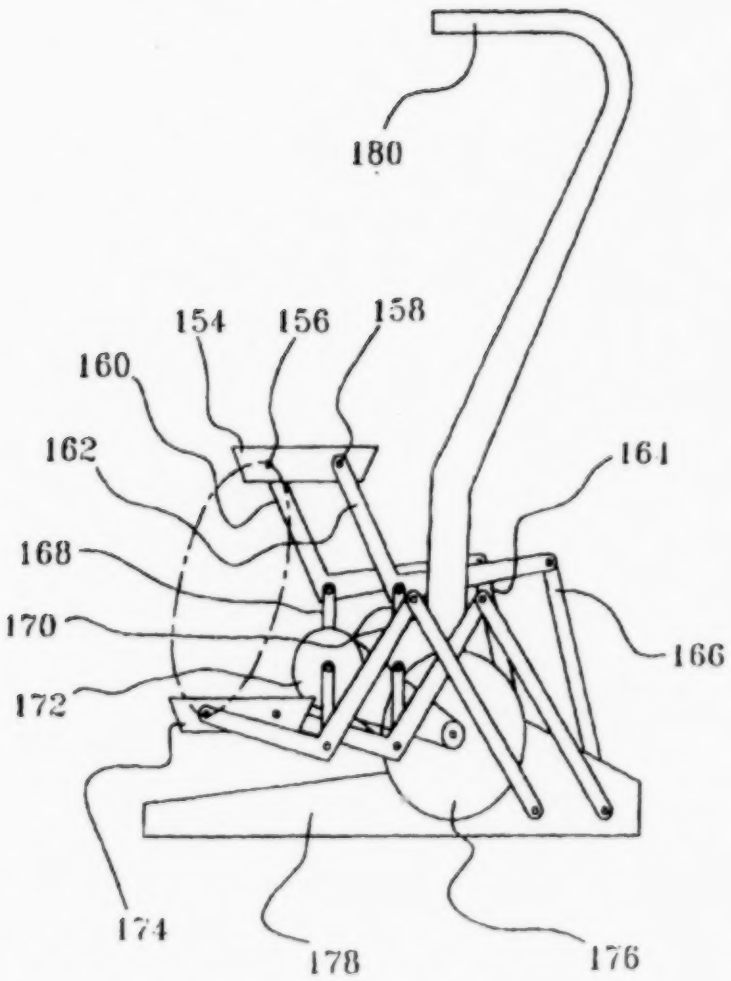

FIG. 7

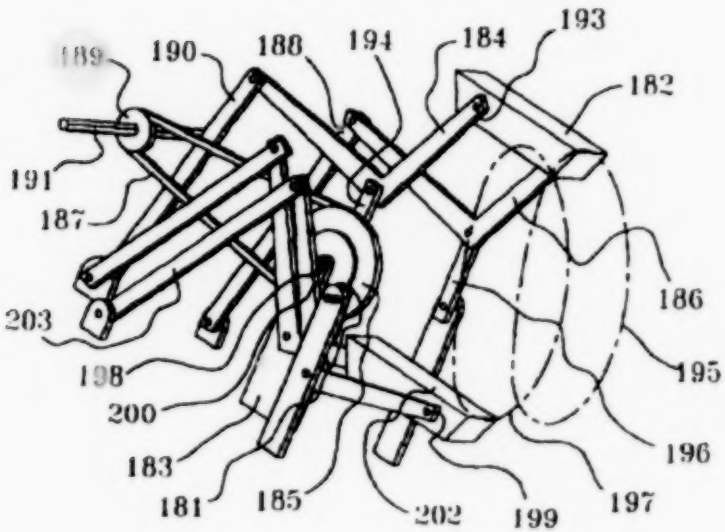
189
190
188
194
184
193
182
191
187
186
203
195
198
200
196
183
181
185
202
199
197

FIG. 8

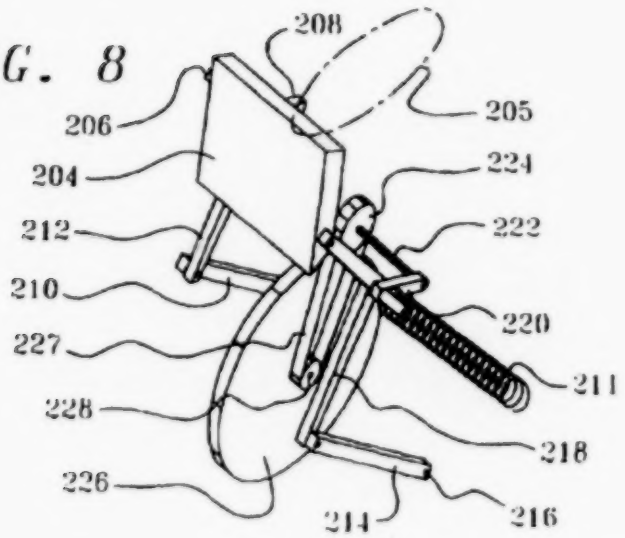
208
206
205
204
224
212
222
210
220
227
211
228
218
226
214
216

FIG. 9

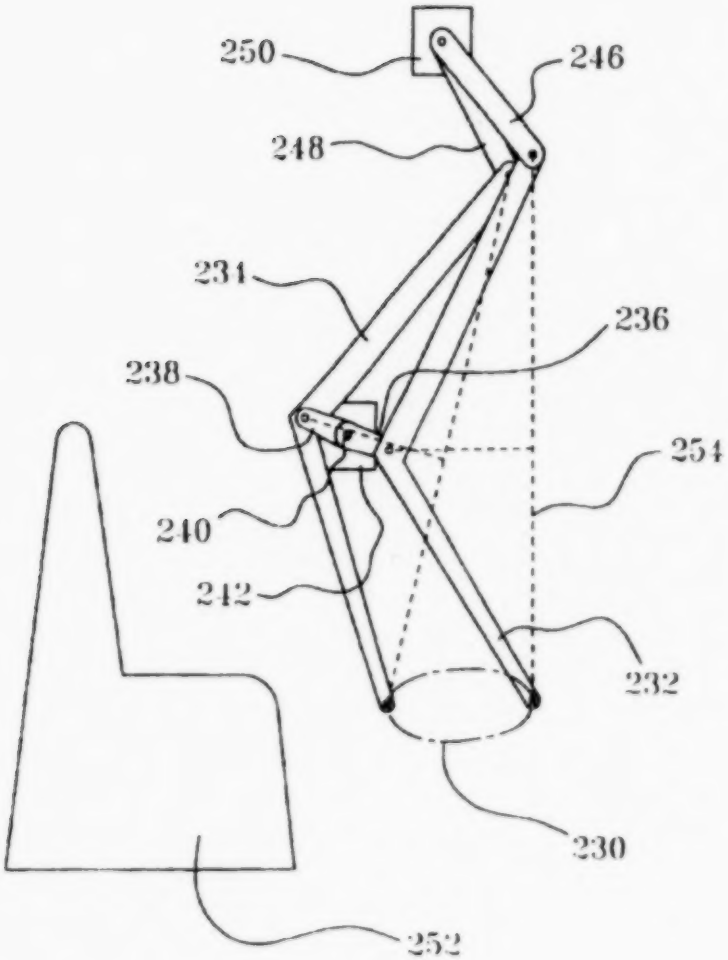

FIG. 10

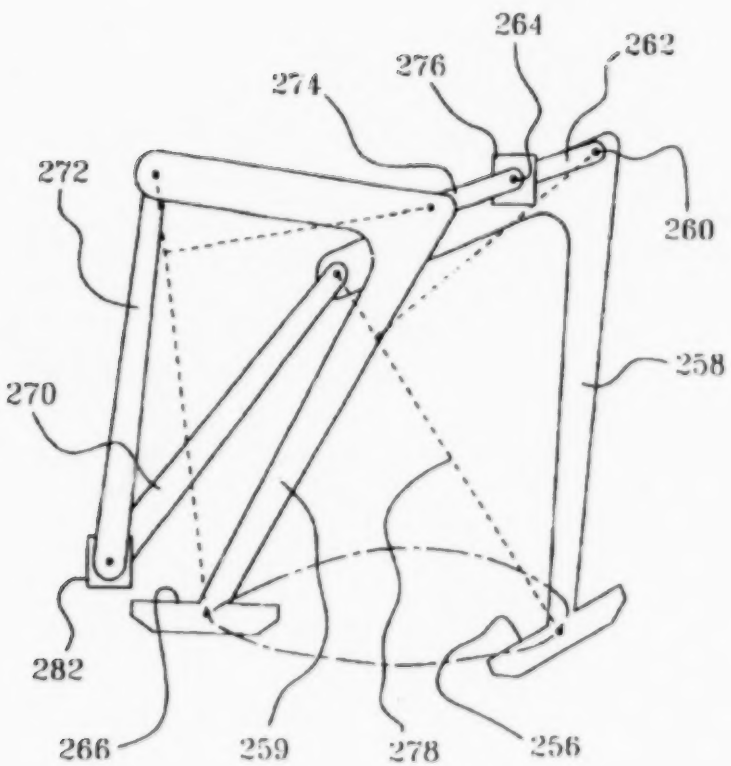

FIG. 11

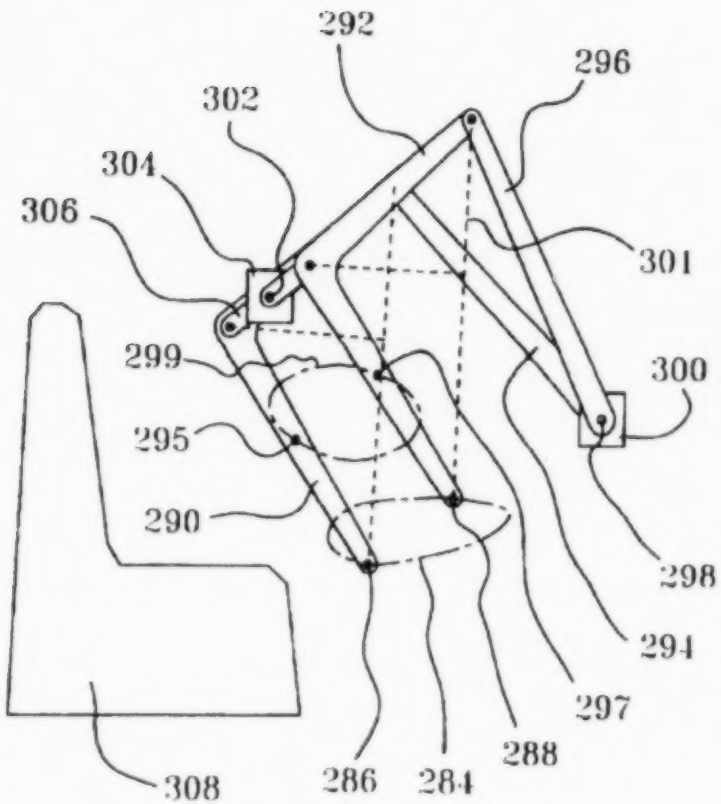
292
296
302
304
306
301
299
300
295
290
298
294
297
288
308
286
284

FIG. 12

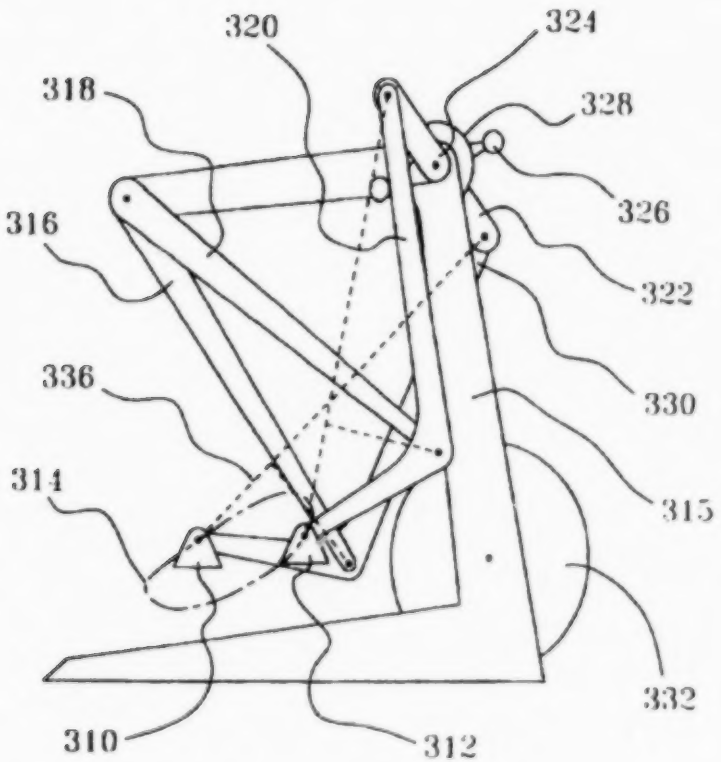

FIG. 13

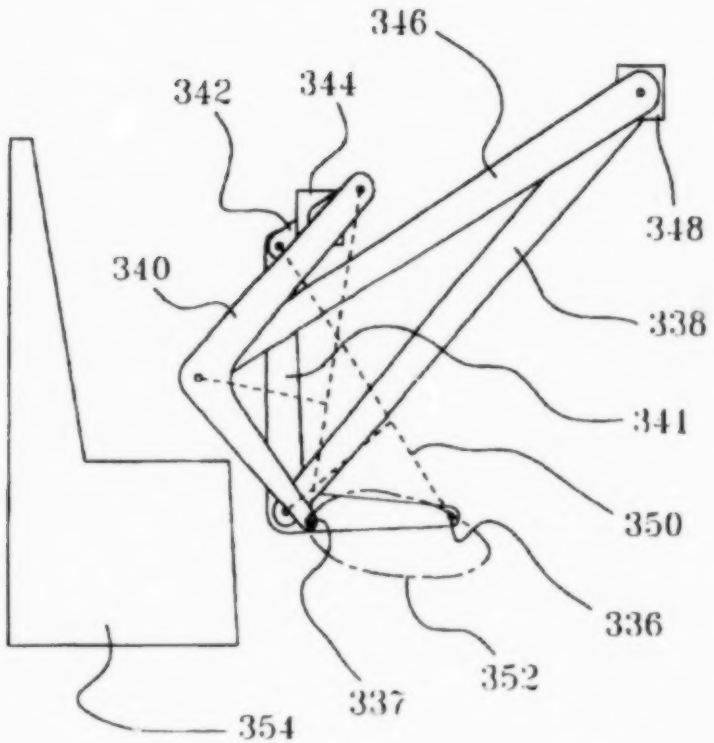

FIG. 14

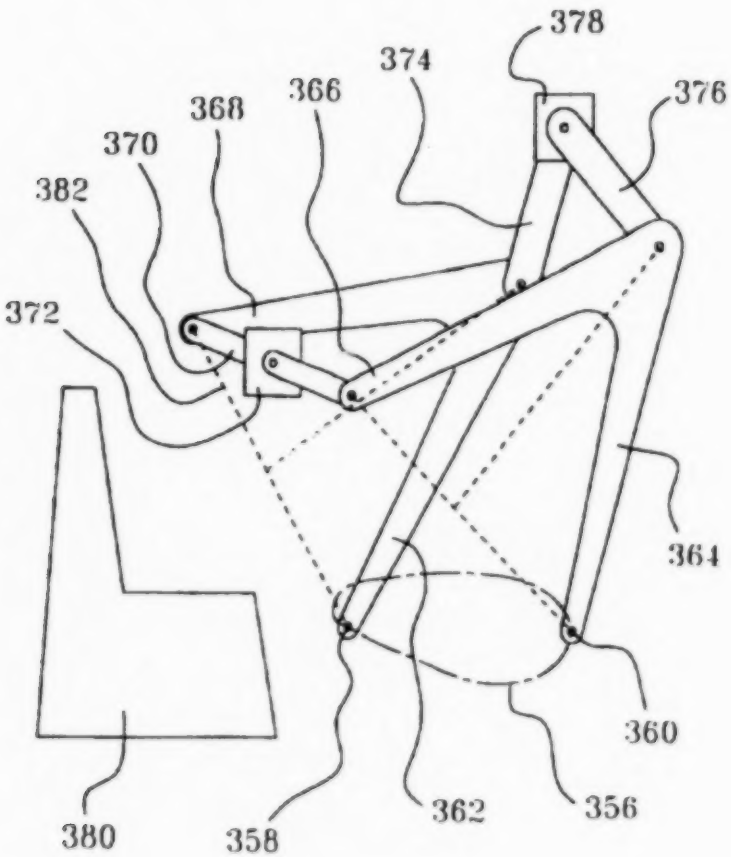

FOUR BAR EXERCISE MACHINE

BACKGROUND OF THE INVENTION

The prior art is replete with many categories of exercise machines designed to exercise all major muscle groups of the human body. The most popular machines provide motion similar to activities such as bicycling, skiing, walking or stepping. The popularity of these machines is due to the effective low impact form of exercise enabled, as well convenience and time saving advantages.

In reference to machines such as stationary bicycles and steppers which involve the lower body, and cause the operators feet to move under resistance along constrained arcuate paths, evolving bicycle and stepper machine designs continue to incorporate foot motion paths of arcuate forms which are circular by definition. With bicycle machines, the circular path is caused by the simple relationship of the distance between the foot pedal and the pedal crank shaft. This constancy of motion is artificial to the human body, and is not considered by the inventor to be optimum during exclusive use for long term muscular development and conditioning. Bicycle machines do however offer a continuous motion which is preferable in order to ensure machine usage.

In reference to stepper machines, the arcuate path that the foot platforms travel about is a simple function of the distance between the foot platform and the pivot point of the platform support member. The stop and go motion of conventional steppers, in conjunction with the somewhat linear foot path, is considered by the inventor to be less ergonomic than the four bar stepper design of the present invention.

If one studies the motion paths of human feet during an activity such as walking or running, it will readily be observed that they travel along paths more accurately described as teardrop shaped. Whereas in the case of hill or stair climbing, the motion of ones feet closely resembles an ellipse or oval. The present invention provides a means to satisfactorily produce either motion, teardrop or elliptical, and does so in an efficient and economical way.

BRIEF DESCRIPTION OF THE INVENTION

The present invention provides a means to generate a number of characteristically distinct closed curves by using an arrangement of linkages. In all of the embodiments of this invention, the motion output of the linkages occurs at the foot pedals or foot platforms. Output of the linkages is also illustrated in several figures to additionally interface with a persons arms or hands in order to exercise upper body muscles.

Generally, the dynamic linkage portion of the mechanism may be described as containing three pin connected links, and in most of the illustrated embodiments, these link assemblies are shown as a pair, interconnected by a common crank shaft. In this text, the general terms for these three dynamic links are crank, connector, and rocker. The frame of the machine serves as a fourth stationary link. The length of each of these four links, in combination with the arrangement in which they are pinned together, establishes the desired output exercise curve.

The first link is the shortest of the four links and is referred to as a crank link. The crank link is not to be considered figuratively as a drive link because this link receives force and is caused to rotate due to actions of the machine operator. It is possible however to drive this crank link independently by a motor or such if the design of a powered exercise machine is desired.

In the embodiments which provide a common crank shaft between a right and a left foot or hand receiving member, the attached cranks are diametrically opposed as to operate out of phase with respect to each other by 180 degrees. This phase difference of 180 degrees is not directly equatable to the relative positions of the foot platforms due to differences of instantaneous velocity or accelerations of the foot platforms at different path points. For the linkage system shown in the first figure, the platforms are positionally maintained out of phase by approximately 180 degrees, and the operator would not sense an imbalance of platform velocity or acceleration.

Although the most popular application of this invention would subject both feet along separate elliptical paths on two foot platforms out of phase with respect to each other by 180 degrees, another embodiment, intended primarily for a recumbent style exercise machine provides only one, relatively wide foot platform. In this embodiment the user reclines on a sloped bench and pumps the foot platform throughout an elliptical path with both feet side by side in a continuous, momentum gaining manner. This form of exercise is intended to be similar to squatting and standing exercises while eliminating strain and potential injury to back muscles.

Continuing now, the second link, referred to as a connector link, is rotatably attached to both the crank and the rocker. The foot platforms and/or hand receiving members are also rotatably attached to this connector link such that a total of at least three pin joints are always present and utilized at the connector link. The connector link cyclically translates while rotating a limited amount. Considering the shape of the connector link, it may in fact be considered to be comprised of two portions, a first connector portion which connects the crank to the rocker, and a protruding portion or lever portion which is cantileverly actuated by a foot platform. During operation, the third link, referred as a rocker, has a proximal end rotatably connected to the connector link, and a distal end rotatably connected to the machine frame. This rocker link will never completely revolve, but rather swing back and forth a limited amount.

The stationary link or fourth link rotatably secures the crank and the rocker to the machine frame.

In the preferred embodiment, the connector link is rotatably mounted at one distal end to the rocker, and at an opposite distal end to a foot platform. Offset and between these opposite distal ends the crank is rotatably secured.

In order to ensure smoothest operation while cycling the foot platforms, particularly while they are at their minimum and maximum deflection point, a flywheel may be coupled to the crankshaft.

BRIEF DESCRIPTION OF THE DRAWINGS

The invention will be further described in conjunction with the accompanying drawings, which illustrate preferred embodiments, and wherein:

FIG. 1 is a perspective view of the first embodiment which incorporates means to drive a flywheel, and will be pedaled while the operator is seated.

FIG. 2 is a side view of the first embodiment and illustrates the linkages at different positions during the cyclic action.

FIG. 3 (3a–3e) are side views of four bar linkages which produce characteristically distinct and useful motion paths at the foot platforms.

FIG. 4 is a side view of an exercise machine and incorporates pivoting pedals upon the linkage mechanism of the first embodiment.

FIG. 5 is a side view of an exercise machine which utilizes a linkage system of the first embodiment, and also utilizes a separate linkage system connected to the foot platforms in order to maintain the platforms parallel and horizontal.

FIG. 6 is a side view of the first embodiment which incorporates a duplicate set of the four bar mechanism in order to maintain the foot platforms parallel and horizontal.

FIG. 7 is a perspective view of the dual linkage system shown in FIG. 6.

FIG. 8 is a perspective view of the four bar mechanism of the first embodiment and shows two four bar mechanisms connected to one relatively wide platform for use with both feet when the operator is reclined.

FIG. 9 is a side view of an exercise machine which incorporates a four bar mechanism similar to FIG. 3a.

FIG. 10 is a side view of an exercise machine which incorporates a four bar mechanism similar to FIG. 3b.

FIG. 11 is a side view of an exercise machine which incorporates a four bar mechanism similar to FIG. 3b, and has a crank positioned for supplemental upper body exercise while the operator is seated.

FIG. 12 is a side view of an exercise machine which incorporates a four bar mechanism similar to FIG. 3c.

FIG. 13 is a side view of another exercise machine which incorporates a four bar mechanism similar to FIG. 3c and has a crank positioned in close proximity to a seated operator to provide supplemental and optional upper body exercise.

FIG. 14 is a side view of an exercise machine which incorporates a four bar mechanism similar to FIG. 3b, and also allows for supplemental upper body exercise motion.

DETAILED DESCRIPTION OF THE INVENTION

As shown in FIG. 1, the linkage mechanism consists of three dynamic links. The first foot platform 2 is rotatably secured to first connector link 4 at first foot platform joint 24. The first crank radius 6 rotates with crank axle 8. Crank axle 8 is rotatable secured to the machine frame. The end of first crank radius 6 is rotatably connected to the first connector link 4 so to cause that point of first connector link 4 to travel along a circular path. A first rocker link 10 is rotatably secured at one end to a distal end of first connector link 4, and at the opposite end to a portion of the machine frame 12. First foot platform 2 is illustrated at its uppermost position, and will be caused to travel along first elliptical path 3 as first crank radius 6 rotates one revolution. The reader will note that although reference is made in this text to elliptical paths, this should not be construed to imply such a path defines a perfect oval, but rather that the path is generally non-circular and may be nonsymmetrical.

Continuing now with FIG. 1 at the opposite side of the machine, second crank radius 18 is secured to crank axle 8 at a diametrically opposite orientation of first crank radius 6. Second connector link 16 is rotatable secured to second rocker link 20 and to second foot platform 14. First and second foot platforms cantilieverly actuate distal ends of first and second connector link respectively. The foot platforms may therefore be considered to be secured at a point on the connector link beyond a fulcrum, and wherein the connector link is additionally supported by a balancing member or balancing force behind the fulcrum. For example, in this embodiment, a crank radius is considered to act as a fulcrum and a rocker link is considered to act as a balancing member. Continuing again, second rocker link 20 pivots about a pin joint secured to a portion of the stationary machine frame 22. Because the first and second cranks are orientated 180 degrees opposite, the second foot platform 14 illustrated at the lowermost position of second elliptical path 15 will be maintained approximately 180 degrees out of phase with the first foot platform 2 throughout the cyclic action. Crank pulley 26 may be installed to transmit torque to and from pulley 30 and pulley shaft 32 if a flywheel and/or upper body crank arms are to be installed. A V-belt 28 is illustrated between crank pulley 26 and pulley 30, however a suitable sprocket or timing pulley may be used with a roller chain, timing belt, or other endless flexible member.

Referring now to FIG. 2, the three dynamic links are illustrated at multiple positions along the cyclic motion in dashed lines. Crank link 36 rotates once about crank shaft 38 for each complete cycle of the coupled connector link 34 and rocker link 44. Connector link 34 is near the bottom of its cycle, and preferably causes a connected (unillustrated) foot platform to travel along an elliptical path in a counter clockwise direction as the operator faces to the left. In this regard, the linkage mechanism may be operated in either direction unless additional mechanical elements such as one way clutches or bearings are incorporated into the design.

Directing attention now to FIG. 3, five variations of four bar linkages are shown which will cause a foot platform to travel about a closed curve useful when performing exercises. Variations in the shape of the closed curves may be achieved by modifying link lengths and rearranging the points of rotation. By so doing, the curves may approximate near perfect ovals to the aforementioned tear drop shape.

Beginning at FIG. 3a, rocker link 54 and crank radius 48 are rotatably secured to the base at 56 and 50 respectively. Both base points are positioned approximately in line and perpendicular to the major axis of the elliptical path 60 formed as the foot platform joint 58 of connector link 52 traverses through its cyclic action.

Referring now to FIG. 3b, crank radius 62 revolves about a point fixed to the machine frame or base 64. Rocker link 68 oscillates about a different point of the machine frame or base 70. Coupled between crank radius 62 and rocker link 68 the connector link 66 defines the motion path 74 of the foot platform mounting joint 72. The arrangement and proportions of the dynamic links shown in FIG. 3b enables the operator to stand and supplementally rotate the crank radius 62 by hand. A portion of the connector link of FIG. 3b is always positioned between the base points.

Referring now to FIG. 3c, crank radius 74 is rotatable secured to base 78, and rocker link 82 pivots about base 84. The elliptical path 88 created at foot platform joint 86 during the cyclic motion of connector link 80 is of a relatively high length to width ratio. Base points are located relatively parallel to the major axis of the depicted ellipse.

Directing attention now to FIG. 3d, rocker link 94 pivots about base 98 and is rotatably secured to connector link 96. Crank radius 90 revolves about a point fixed on base 92 and causes foot platform joint 100 to define a closed curve 102 resembling the capital letter 'D'. Although FIG. 3d is similar to the linkage shown in FIG. 3c, minor changes to the crank and the connector in conjunction with substantially shortening and repositioning the rocker results in a characteristically distinct curve.

Referring now to FIG. 3e, crank radius 104 revolves about a point fixed to base 106, and causes distal end of connector link 108 to translate about a circular path. At the opposite

distal end of connector link 108 is rotatably secured rocker link 110 as rocker link 110 oscillates about a point fixed to base 112. The elliptical path 114 may be defined at a point directly between the opposite distal ends of connector link 108.

Directing attention now with FIG. 4, a linkage system characteristic of the first embodiment is shown. The operator will stand with one foot on the first foot platform 126, and with the opposite foot on the second foot platform while treading them about the elliptical path 134. If the foot platforms are to remain level throughout the cyclic action, they must be able to pivot a total range of approximately 38 degrees relative to the connector links, or 19 degrees from a neutral position relative to the connector link. It may be preferable to incorporate rotational stops at the pin joint connecting each of the foot platforms limiting the rotational freedom to a total of 38 degrees in order to facilitate operation.

First crank radius 116 and first rocker link 124 are rotatably secured to the machine frame 130, and also rotatably secured to first connector link 122. Second crank radius 118 is rigidly fixed to and symmetrically opposite first crank radius 116. Handle grips 132 are fixed to the machine frame 130 as a safety aid. Pulley 120 is nonrotatably secured to the first and/or second cranks 116 and 118 respectively and will transmit torque to and from flywheel 128. Additionally, although not illustrated in any of the figures, drag resistance may be incorporated at the machine in any of the embodiments, by installing a band brake upon the flywheel, or hydraulic linear dampers or rotational dampers at any of the dynamic links.

Concluding on FIG. 4, datum lines 125 shown in broken lines illustrates the effective connector link 122 shape, and compares with link mechanism shown in FIG. 3a. Note that by establishing a segment line between the connector link foot platform journal (third first connector link joint) to the connector link rocker journal (second first connector link joint), followed by establishing a perpendicular line to the connector link crank journal (first connector link joint), the perpendicular line will intersect the segment line between the segment line endpoints. This relationship is analogous to stating that if a circle is constructed on a given plane with its diameter defined at endpoints of a line connecting the connector link crank journal and the connector link rocker journal, where the crank radius journal axis and the rocker journal axis perpendicularly intersect the plane, then the connector link foot platform journal rotational axis will intersect the same plane at a region outside of the constructed circle.

Continuing now briefly with FIG. 4, as previously indicated, the connector link is shown to consist of two portions, a connector portion and a lever portion. The connector portion joins a crank radius joint to a rocker joint, and the lever portion is an extension or protrusion integral with the connector portion as to provide a cantilevered mounting base to which a foot platform is rotatably secured. In this respect, the first connector link joint is analogous to a first connector portion joint, the second first connector link joint is analogous to a second first connector portion joint, and the third first connector link joint is analogous to the planed location of the first foot platform joint. In a configuration where the three joints define a triangle, an equivalent shape of the connector link would of course be a solid triangle as opposed to the dogleg profile shown in this specification.

Directing attention now to FIG. 5, the linkage system of the first embodiment is shown with an independent means to maintain the foot platforms 126 and 128 parallel and horizontal. Crank radius 145 is rotatably secured to first and second connector link 144 and 140, and revolves about a fixed point on the machine frame 148. First and second rocker 146 and 142 share a common axis of rotation to the machine frame, and are connected at their opposite ends to first and second connector links 144 and 140 respectively. The platforms are maintained parallel by the geometrical relationships between the pair of identical orientations members 150, the eight identical rigid bars 152, and the constant pin joint hole patterns on the orientation members 150 and at the machine frame 148. The datum lines 147 also compare with FIG. 3a of the first embodiment.

Referring now to FIG. 6, the linkage configuration of the first embodiment is shown in duality in order to provide a means to maintain the first and second foot platform 154 and 174 parallel and horizontal. The first foot platform 154 is rotatably secured at a first foot platform joint 158 and at a second first foot platform joint 156 to a first connector link 162 and third connector link 160 respectively. Four rocker joints are also shown, with each pair of identically orientated rockers corresponding to one of the two foot platforms. In this embodiment (and also that of FIG. 2), the rockers pivot about a point fixed on the machine frame 178 for a total range of approximately thirty six degrees. The first rocker link 166 and third rocker link 164 have pivoted within eleven degrees of their forward most position while the connected platform is approximately at the apex of its travel. The relative positions between the rotation axes of first crank radius 170 and third crank radius 168 are identical to the relative positions between the axes of rotation of the pin joints present at each of the two foot platforms.

In order to give the machine inertial characteristics, a flywheel drive pulley 172 is fixed to one of the cranks wherein the drive pulley 172 rotational axis is co-axial with the associated crank rotational axis.

Referring now to FIG. 7, a perspective view is shown of the dual linkage mechanism shown in FIG. 6 corresponding to the first embodiment. First connector link 184 and third connector link 186 are rotatably secured at first foot platform 182 left and right sides, or first foot platform joint 193 and second first foot platform joint respectively. The first connector link 184 is rotatably secured to first crank radius 194. First crank radius 194 is rigidly connected to second crank radius 200 at crank axle 198. Both cranks have a crank radius established diametrically opposite. Crank axle is supported at each side of crank pulley 185 by crank support plate 183. If desired, the crank pulley could be secured to rotate with any of the four cranks: first crank radius 194, second crank radius 200, third crank radius 196, or fourth crank radius 181. Continuing with the illustrated pulley 185, the crank support plates 183 are stationary with the machine frame. Flywheel pulley 189 is attached to flywheel shaft 191 and is driven via flywheel belt 187. Second foot platform 202 second motion path 197 lies in a plane parallel to the first motion path 195 of first foot platform 182. The first foot platform 182 is shown approximately at its uppermost position, and second foot platform 202 is shown approximately at its lowermost position. First crank radius 194 is of the same crank length as all other crank lengths. The dual linkage mechanism is secured to the stationary machine frame at a total of eight separate points, and four distinct rotational axis. First rocker link 190 and third rocker link 188 are orientated identically, and are rotatably secured to stationary base points symmetrical with their left side counterparts. Fourth rocker link 203 is rotatably connected to fourth connector link, and fourth connector link is rotatably

connected to second foot platform joint **199**. Second first foot platform joint is directed into the paper, and is not visible in this figure.

Directing attention now to FIG. **8**, a singular first foot platform **204** is designed of proper width as to receive both feet of the user. The linkage mechanism is of a similar design of the first embodiment. The operator may power this mechanism while in a semi-reclined position, and pump the singular first foot platform **204** in a motion similar to what would be experienced when performing knee bends or standing/squatting exercises. The pad that the operator is resting upon shall preferably be inclined ten or twenty degrees. The inventor will note here that, in order to reduce confusion, the convention in this text will be to continue to refer to the first foot platform as always being connected to the first or first and third connector link, while the second foot platform is always connected to the second or second and fourth connector link. Also, the first, second, third, and fourth connector link will always be connected to a named first, second, third, and fourth crank radius respectively. Continuing now, third crank radius **208** is rotatably secured to both the unillustrated machine frame and to third connector link **206**. Third connector link distal end **212** is rotatably secured to third rocker link **210**. First rocker link **214** is rotatably secured to the machine frame at pin joint **216**, and also to first connector link **218**. The foot platform will translate about a first path **205** while maintaining constant angular orientation with respect to the machine frame. Crank shaft **222** is rotatably secured to the machine frame and supports both the first crank radius **220** and a flywheel drive pulley **224**. The flywheel **226** is driven by flywheel drive pulley **228** via flywheel endless drive member **227**. The flywheel endless member may be a standard V-belt, a timing belt or synchronous belt, a flat or round belt, or a roller chain. A flywheel is particularly desirable in this version of the first embodiment because the momentum of the flywheel **226** may be necessary to power the foot platform during return motion toward the operator. Shown also in this figure is a compression spring **213** to always return and park the first foot platform **204** toward the operator past both cranks top dead center position when the exercise machine is idle. This will bias the mechanism to a starting position and enable the foot platform to readily move in the correct direction upon machine startup during applied foot compression force against first foot platform **204**. This compression spring **211** need have only a relatively low spring constant to serve this function, although if distinct and adjustable force characteristics are desired to be incorporated, the spring constant could be increased appreciably such that a flywheel need not be present. In this regard, a spring of significant constant may be present; particularly on embodiments which do not have the foot platforms coupled together at a common crank axis (platforms may be cycled independently) in order to supplement or replace the flywheel. The spring may be secured at one end to the machine frame, and at the opposite end to any suitable anchor point upon the mechanism including one or more of the cranks, rockers, connector links, or even upon the foot platforms. For example, if a spring is incorporated into the linkage on FIG. **7** to assure return of the foot platforms, then the cranks **194** and **200** would not need to be physically connected.

Again, it may be noted that reference is made of 'first' and 'third' members in FIG. **7** in order to be consistent with the text. In this respect, text reference to 'first' and 'third' always corresponds to the first foot platform, and text reference to 'second' and 'fourth' always corresponds to the second foot platform, if the referenced members exist in the figure. Also, although this figure shows 'third' members, it would still function well if only 'first' members were present, properly resulting in a foot platform mounted rotatably to the connector link. This foot platform would then function much like one oversized bicycle pedal.

Referring now to FIG. **9**, datum lines **254** indicate a linkage arrangement corresponding to FIG. **3a** of the first embodiment. First rocker joint **246** and second rocker joint **248** are rotatably secured to machine frame **250** at a common axis. First connector link **232** and second connector link **234** are rotatably secured to first crank radius **236** and second crank radius **238**. First and second cranks **236** and **238** have collinear rotational axes **240** about a point stationary with the machine frame **242**. The reader will note that on all of the embodiments illustrated, the paired first and second and/or third and fourth cranks revolve, and are represented as rigid members sharing one axis of rotation. These revolving cranks may therefore be replaced by a disk, wheel, or even a flywheel with pin joints established at diametrically opposite positions if dimensional mounting constraints allow. The elliptical path **230** of the unillustrated foot platforms is situated to be readily engageable with the operators feet when the operator is positioned in seat **252**.

Directing attention now to FIG. **10**, a closed curve is shown which will produce a motion at the foot platforms which represents an ellipse of relatively sharp proportions. The datum lines **278** are characteristic of the mechanism shown in FIG. **3b** of the second embodiment. The linkage mechanism may be operated while one is standing. First and second foot platforms **256** and **266** respectively may be rigid with first and second connector links **258** and **259** respectively. First crank radius **262** and second crank radius **274** are rotatably secured at rotational joint **264** attached to machine frame **276**. Corresponding to the first connector link, pin joint **260** allows full rotation of first connector link **258** relative to first crank radius **262**. First rocker link **270** and second rocker link **272** are rotatably attached to first and second connector links **258** and **259** respectively, and are also rotatably secured to machine frame **282** while sharing a common rotational axis.

Referring now to FIG. **11**, a linkage mechanism is shown with datum lines **301** indicating an arrangement similar to FIG. **3b**. Foot platforms are rotatably secured to first and second connector links **292** and **290** at bearings **288** and **284** respectively. First and second rocker joints **296** and **294** share a common rocker rotational axis **298** at a portion of the machine frame **300**. Crank **306** has pin joints symmetrically opposite each side of crank rotation axis **302**. Crank rotational axis does not translate with respect to machine frame **304**. In this embodiment the operator will be positioned in seat **308** and crank the unillustrated foot pedals along the illustrated elliptical path **284**.

Note that in this embodiment, first and second connector links **292** and **290** may have attached handle bars **297** and **295** respectively which may be moved throughout a closed handle bar curve **299** generated at the handle bar attachment point. In this configuration, the user cyclically forces the foot platforms throughout their elliptical path while simultaneously exercises the upper body by forcing the handle bar throughout its elliptical path **299** during the use of ones' arms and hands. By attaching the handles closer to the rocker joints than the attachment point of the foot platforms are to the rocker joints, the closed curve path **299** generated at the handle bar is relatively smaller than the closed curve path **284** generated at the foot platforms. An upper and lower body exercise machine such as this would be operated by

alternatingly pushing with ones feet and pulling with ones arms. In describing this motion, as the operator faces the machine and the two somewhat horizontal elliptical paths, the operator will pull with his/her right arm at the lower region of the handle bar path 299 while freely returning his right foot at the lower portion of the right foot pedal path 284. It followed by returning his/her right hand forward at the upper half of the handle bar path 299 and pushing his/her right foot at the upper half of the foot pedal path 284. The left side of the operators body would be out of phase with the right side by 180 degrees.

If both feet are placed upon one platform, and only one crank, rocker, and connector link exists on the machine, the exercise machine has operational characteristics unique to the exercise industry. An upper and lower body exercise machine such as this would be operated by alternatingly pushing both feet and pulling with both arms. In describing this motion, as the operator faces the machine and the two horizontal elliptical paths, the operator will pull with both arms at the lower region of the top ellipse while freely returning both feet at the lower portion of the bottom ellipse. This action will be followed by returning both hands forward at the upper half of the top ellipse while pushing both feet at the upper half of the bottom ellipse. This action is not to be confused with a rowing machine action for the following three reasons: (1) the upper body and the lower body is exercised at a phase difference of 180 degrees, as opposed to the rowing machine which stresses both the upper and lower body simultaneously; (2) most rowing machines do not include a flywheel; and (3) continuous cyclical motion exists with the present invention as opposed to the stop and go or continuously reversing action of a rowing machine.

Continuing now with FIG. 12, a third embodiment is shown with datum lines 336 similar to both FIG. 3c and FIG. 3d. In these figures, if a segment line is established between the connector link crank journal (first connector link joint) to the connector link foot platform journal (third first connector link joint), and then a perpendicular line is drawn passing through the connector link rocker journal (second first connector link joint), the perpendicular line will intersect the segment line between the segment line endpoints.

As further shown on FIG. 12, the proximity of the crankshaft 324 enables the operator to stand while optionally rotating the handle grips 326 of crank 322 by hand. Crank 322 is rigid between the rotational axis of the upper distal ends of first connector link 320 and second connector link 334, and rotatably secures the upper distal ends of the connector links as they revolve about the crank rotational axis. First and second rocker links 318 and 316 share a common rotational axis fixed to the machine frame 315 thereby allowing the required pivoting or oscillating motion. First and second foot platform 312 and 310 respectively travel along the now familiar elliptical path 314 during crank rotation. Crank pulley 328 may be of sufficient size and mass as to adequately serve as a flywheel, or may drive a flywheel 332 rotatably secured to the machine frame 315.

Directing attention now to FIG. 13, datum lines 350 depict a linkage system similar to FIG. 3c. This is another arrangement of linkages which allows the operator to be seated while exercising both the upper and lower body, without the necessity of additional mechanical elements such as pulleys or actuators to bring working curves within proximity of both the upper and lower body. Crank 342 rotates about a point fixed to machine frame 344, and connects at opposite crank radii to first and second connector links 341 and 340. First and second rockers 338 and 346 pivot about a point fixed to the machine frame 348, and are physically placed at each side of the operator as to not interfere with the operators leg motion. Elliptical path 352 is generated at pin joints 336 and 337.

When the operator is positioned in seat 354, both the foot pedals and the hand grips may be adjusted to fit the operator properly. This may be accomplished by changing the distance between the machine frame and the seat 354, and/or changing the orientation and/or shape of the elliptical path (s). To change the orientation or angle between the major axis of the elliptical path relative to a horizontal plane, simply rotate the machine frame including portions 344 and 348 about which the cranks and rockers are rotatably secured. To change the shape of the elliptical path, two of the simplest methods is to change the distance between the two machine frame regions 344 and 348 resulting in a new centerline distance between the machine frame secured rotational axes of the cranks and rockers, or alternatively adjust and change the length of any or all of the three dynamic links (cranks, connector links, and rockers).

Referring finally now to FIG. 14, datum lines 382 most closely represent the linkage mechanism of FIG. 3a. Crank 370 revolves about a point fixed to the machine frame 372, and rotatably secures first and second proximate connector link regions 366 and 368. First and second rocker links 376 and 374 pivot about a point fixed relative to a portion of machine frame 378. First and second connector links 364 and 362 are rotatably secured to the crank 370 and to first and second rocker 376 and 374. The operators feet may exert force directly on perpendicular shafts 360 and 358, or upon unillustrated rotatable foot pedals rotatably joined at shafts 360 and 358. The operator seat 380 may be positioned for optimum comfort while cycling his/her feet along the elliptical path 356. Again, as with all embodiments, the elliptical path may also be customized to preferences of the operator.

Thus, an improved exercise machine is shown which provides the operator with motions or combinations of motions which are new in the art. While preferred embodiments of the invention have been shown and described, it will be apparent to those skilled in the art that changes and modifications can be made in these embodiments without departing from the principles and spirit of the invention, the scope of which is defined in the appended claims.

I claim:

1. An exercise apparatus, comprising:

a frame;

a crank (48) rotatably connected to said frame, thereby defining a first axis;

a first link (52) rotatably connected to said crank at a point radially displaced from said first axis, thereby defining a second axis;

a second link (54) rotatably connected to said first link at a point radially displaced from said second axis, thereby defining a third axis, and rotatably connected to said frame at a point radially displaced from said third axis, thereby defining a fourth axis; and

a user foot support force receiving member (58) connected to said first link, wherein said second axis is disposed between said third axis and said force receiving member and resistance means operatively associated with said crank for providing exercise resistance.

2. The exercise apparatus of claim 1, wherein said force receiving member is a pedal rotatably connected to said first link at a point radially displaced from said second axis, thereby defining a fifth axis.

3. The exercise apparatus of claim 2, wherein said second axis is nearer to said fifth axis than to said third axis.

4. The exercise apparatus of claim 2, wherein said second axis is nearer to said third axis than to said fifth axis.

5. The exercise apparatus of claim 1, wherein said force receiving member travels in a path defining a closed curve having a major axis which extends generally perpendicular to a line extending between said first axis and said fourth axis.

6. The exercise apparatus of claim 1, wherein at least a portion of said first link is always disposed directly between said first axis and said fourth axis.

7. The exercise apparatus of claim 1, further comprising a flywheel rotatably connected to said frame and connected to said crank to rotate together therewith.

8. The exercise apparatus of claim 1, wherein said second axis is spaced apart from a line extending between said third axis and said force receiving member.

9. The exercise apparatus of claim 8, wherein said first link is generally L-shaped.

10. The exercise apparatus of claim 1, further comprising a toggle interconnected between said frame and said force receiving member and operable to maintain said force receiving member in a constant orientation relative to said frame.

11. The exercise apparatus of claim 1, further comprising:

a second crank rotatably connected to said frame and rotatable about said first axis;

a third link rotatably connected to said crank at a point radially displaced from said first axis, thereby defining a fifth axis;

a fourth link rotatably connected to said third link at a point radially displaced from said fifth axis, thereby defining a sixth axis, and rotatably connected to said frame at a point radially displaced from said sixth axis, thereby defining a seventh axis; and

a second force receiving member connected to said third link, wherein said fifth axis is disposed between said sixth axis and said second force receiving member.

12. The exercise apparatus of claim 11, wherein said seventh axis and said fourth axis are coaxial.

13. The exercise apparatus of claim 1, further comprising:

a second crank rotatably connected to said frame and rotatable about said first axis;

a third link rotatably connected to said crank at a point radially displaced from said first axis, thereby defining a fifth axis, and connected to said force receiving member; and

a fourth link rotatably connected to said third link at a point radially displaced from said fifth axis, thereby defining a sixth axis, and rotatably connected to said frame at a point radially displaced from said sixth axis, thereby defining a seventh axis, wherein said fifth axis is disposed between said sixth axis and said force receiving member.

14. The exercise apparatus of claim 1, further comprising a seat connected to said frame and facing toward said first link.

* * * * *

SA-72

EXHIBIT 2 TO OCTANE'S MEMORANDUM IN SUPPORT OF ITS MOTION FOR ATTORNEY FEES AND COSTS - EMAIL CHAIN INCLUDING EMAIL FROM P. MCGINNIS TO J. KAZAN AND A. WILK DATED AUGUST 24, 2008

From: Adam Wilk
Sent: Monday, August 25, 2008 9:49 AM
To: Matthew Loscials
Subject: FW: SNEWS News Update for August 22

Just clearing the way and making sure you guys have all your guns loaded! Look below!

Adam G. Wilk
Specialty Fitness Sales
FreeMotion Fitness
800.458.5337 toll free / 214.418.9312 cell / 800.484.2622 fax
adam.wilk@freemotionfitness.com

From: Pat McGinnis
Sent: Sunday, August 24, 2008 7:53 PM
To: Jeff Kazan; Adam Wilk
Subject: FW: SNEWS News Update for August 22

We are suing Octane. Not only are we coming out with a great product to go after them, but throwing a lawsuit on top of that.

Pat McGinnis
Vice President of Global Sales
FreeMotion Fitness
direct 800.811.0549
cell 425.830.7987
fax 866.844.8288

From: snewsdigest@snewsnet.com [mailto:snewsdigest@snewsnet.com]
Sent: Friday, August 22, 2008 8:21 PM
To: Pat McGinnis
Subject: SNEWS News Update for August 22

SNEWS
WWW.SNEWSNET.COM
Home | Outdoor Headlines | Fitness Headlines | Digest Archive | Manage Account

SNEWS® Headline Email Service

Friday, August 22, 2008

© 2008 SNEWS® / Cruz Bay Publishing. All rights reserved.

SNEWS® Headlines

Icon sues Octane for patent infringement in California... and names one retailer: four-store Nellie's (08/22/2008)
In a lawsuit that charges Octane Fitness with patent infringement, Icon Health & Fitness has included one retailer -- four-store Southern California retailer Nellie's -- in the case that names patent violations on one elliptical. (Click here to read)

Fitness Headline Alerts sponsored by:
The News.
The Trends.
The Insight.
The Influence.
THE JUICE

ICON-OCT 004604

EXHIBIT
2

DEPOSITION EXHIBIT
63
Pat McGinnis

Health Notes: Whole body vibration may benefit older adults, unfit, but not younger or fit (08/22/2008)
This is another in an occasional series of SNEWS® Health Notes reports that will take a look at one or more recent pieces of research studies or reports about health, fitness, physical activity and wellness. This edition focuses on benefits touted from whole body vibration training aren't universal. **(Click here to read)**

Outdoor Retailer Summer Market '08 Trends: Kayaks, canoes, apparel, PFDs, paddles and more (08/22/2008)
Fresh from Outdoor Retailer Summer Market '08, SNEWS shares the latest trends in the paddlesports market, including boats, apparel, PFDs, paddles and more. **(Click here to read)**

Industry Press Releases

SurfShelf Now Available Nationwide (08/22/2008)

InterMedia Outdoors Acquires Barrett Productions (08/22/2008)
InterMedia Outdoors, Inc. (IMO), the industry leader and largest provider of content dedicated to sportsmen, and the parent company of The Sportsman Channel (TSC), today announced that it has acquired Barrett Productions, one of the preeminent producers of outdoors, adventure and sports television programming. This transaction brings together two leading television production and content companies, creating a dynamic and vast video-content entity comprising more than 10,000 hours of video content targeting the outdoors. **(Click here to read)**

VASQUE® Aether Tech SS Receives Top Honors from Runner's World (08/22/2008)
Outdoor footwear manufacturer Vasque announces today that its Aether Tech Soft Shell trail running shoe is the recipient of the coveted 'Best Debut' award in Runner's World magazine's annual Fall Trail Running Shoe Guide. **(Click here to read)**

Buff® Awarded American Alpine Institute's Guides' Choice (08/21/2008)
Buff® Headwear was honored to receive the "Guides' Choice" award by officials of the American Alpine Institute. **(Click here to read)**

REI Presented with Award (08/21/2008)
Recreational Equipment, Inc. (REI), a national retail cooperative providing quality outdoor gear and clothing, has been with The Geographic Awareness (TOGA) Awards. **(Click here to read)**

Kokatat Receives SK Readers Choice Award in Five Categories (08/21/2008)
This past winter Sea Kayaker Magazine conducted an online survey for their prestigious Readers Choice Awards. An overwhelming percentage of end users voted Kokatat products as the best product they have ever used in five separate categories. **(Click here to read)**

Sean Morley Attempts Record Circumnavigation of Vancouver Island (08/21/2008)
In September 2008 California based British sea kayaker Sean Morley will attempt to break the record for the fastest circumnavigation of Canada's Vancouver Island. **(Click here to read)**

More Than 2,500 Adults Pledge to Take Kids Outside (08/21/2008)
More than 2,500 members of The Outdoor Industry took the I Will pledge during Outdoor Retailer Summer Market to take at least two children outside during the next year to experience any outdoor recreation activity. **(Click here to read)**

Sitka 98% Series Receives 2008 Field & Stream Best of the Best Award (08/21/2008)

Wake Up to Real News. Subscribe. Drink the Juice. SNEWS®

Outdoor Headline Alert sponsored by:

Gear/Trends Magazine
Green Scene
Stock Reports
Surveys
Editorials
Reviews
Industry Chat
Training Center
Merchandising Hub
Trade Show News
Podcasts

Post a Press Release
Post a Job

Subscribe to SNEWS®

Law Review Headlines
Editorials
Special Reports
Legal Dictionary
Case Finder
Law Review Quarterly
Resource Center

Sitka, designers and manufacturers of performance hunting gear and apparel, announ... their 90% Series Jacket and Pants is receiving Field & Stream's Best of the Best /... the hunting outerwear category for 2008. (Click here to read)

Brunto... the 2008 Field & Stream Best of the Best Award (08/21/2008)
Brunton, ind... y leader in the development of gear for outdoor adventure, announced their Solo 15 Portable Power System is receiving Field & Stream's Best of the Best Award in the hunting technology category for 2008. (Click here to read)

SCARPA rock shoe line wins eighth 5-star review/award in two years (08/21/2008)
SCARPA North America earns eighth award or five-star review for its rock shoe line in two years. (Click here to read)

[redacted]

ST FITNESS.
FIT STARTS WITH YOU

Industry Chat: Active Article Discussions...

Health & Fitness Business '08: Whole body vibration training products rattle U.S. retail market :: whole body vibration (08/21/2008)

(View All SNEWS® Industry Chat Threads Here)

SNEWS® Job Postings

Senior Textile Engineer--Cascade Designs (08/22/2008)

Credit Analyst - Black Diamond Equipment Ltd. (08/20/2008)

Marketing Director (08/20/2008)

Director of Supply Chain Operations – Horny Toad (08/18/2008)

Merchandising Buyer - Apparel for Sierra Trading Post (08/15/2008)

(View All Job Postings and Classifieds Here)

the news. the trends. the insight. the influence.

SNEWS® Digests

The most recent **Fitness Digest** has been posted for full access subscribers at:
http://www.snewsnet.com/cgi-bin/snews/12657.html

SA-75

The most recent Outdoor Digest has been posted for full access subscribers at:
http://www.snewsnet.com/cgi-bin/snews/12658.html

SNEWS® Contact Information:
Mail: 101 W. McKnight Way, Ste. B-305, Grass Valley, CA 95949-9613
Phone: (530)-268-8295
General SNEWS® email: snewsbox@snewsnet.com
Press Release and news email: news@snewsnet.com
SNEWS® Subscription & Ad Sales Contact Information:
Daisy LeDuc: **sales@snewsnet.com**

Do you have an insider news tip for us? You can email it anonymously here: www.snewsnet.com/cgi-bin/snews/got_a_tip.html
Do you need to fill a job, find a job? Click here: **www.snewsnet.com/classifieds**

© 1993-2002 SNEWS®, An Active Media Interest company. All rights reserved. Specialty News (SNEWS®) is a Web-based, subscription-only, business news and news service published at www.snewsnet.com. SNEWS® is updated as important news breaks with regular SNEWS® Headline Alerts sent to subscriber emails. Individual subscriptions are $195. Group subscription rates at $130 per subscriber. Flat-rate company subscriptions are $3,480 with no limit on the number of subscribers. Contact the SNEWS® sales offices to learn about special packages related to SNEWS® subscriptions and membership in the GeoTrends® Network with special discounts on ads and job listings. SNEWS® does support industry training programs by providing modified and limited subscription access to SNEWS® for free to retail staff enrolled in, or participating in, retail training programs, clinics, on-line education programs, etc. To find out more, send an email to sales@snewsnet.com.

Using or accessing SNEWSnet.com via this email alert or directly constitutes acceptance of our Terms of Use and Privacy Policy. Sharing of a subscription by any format – email forwarding, print, fax, or sharing passwords – is NEVER permitted. SNEWS® reserves the right to immediately terminate a subscription and retain the amount portion of the subscription payment if we discover a subscription is being shared in any manner. If you are not a subscriber and are reading this, you are reading an illegal copy of SNEWS®. To obtain your own subscription simply go to www.snewsnet.com and click on the "Subscribe" button in the upper right corner for detailed subscription information. Cla ads are $99 for a two-month ad. Click on the Classifieds link on the SNEWS® site for information.

Merriam-Webster's Collegiate® Dictionary

TENTH EDITION

Merriam-Webster, Incorporated
Springfield, Massachusetts, U.S.A.

A GENUINE MERRIAM-WEBSTER

The name *Webster* alone is no guarantee of excellence. It is used by a number of publishers and may serve mainly to mislead an unwary buyer.

Merriam-Webster™ is the name you should look for when you consider the purchase of dictionaries or other fine reference books. It carries the reputation of a company that has been publishing since 1831 and is your assurance of quality and authority.

Copyright © 1997 by Merriam-Webster, Incorporated

Philippines Copyright 1997 by Merriam-Webster, Incorporated

Library of Congress Cataloging in Publication Data
Main entry under title:

Merriam-Webster's collegiate dictionary. — 10th ed.
p. cm.
Includes index.
ISBN 0-87779-708-0 (unindexed : alk. paper). — ISBN 0-87779-709-9 (indexed : alk. paper). — ISBN 0-87779-710-2 (deluxe : alk. paper). — ISBN 0-87779-707-2 (laminated cover).
1. English language—Dictionaries. 1. Merriam-Webster, Inc.
PE1628.M36 1997
423—dc20 96-42529
CIP

Merriam-Webster's Collegiate® Dictionary, Tenth Edition principal copyright 1993

COLLEGIATE is a registered trademark of Merriam-Webster, Incorporated

All rights reserved. No part of this book covered by the copyrights hereon may be reproduced or copied in any form or by any means—graphic, electronic, or mechanical, including photocopying, taping, or information storage and retrieval systems—without written permission of the publisher.

Made in the United States of America

17181920RMcN97

SA-78

CASE 0:09-cv-00319-ADM-SER Document 208-1 Filed 06/30/10 Page 13 of 34

rah-rah \'rä-(ˌ)rä, 'rȯ-(ˌ)rȯ\, *adj* [reshapt. of *rah*] (1911) : marked by the enthusiastic expression of college spirit

raid \'rād\ n [ME (Sc) *rade*, fr. OE *rād* ride, raid — more at ROAD] (13c) 1 *a* : a hostile or predatory incursion *b* : a surprise attack by a small force 2 *a* : a brief foray outside one's usual sphere *b* : a sudden invasion by officers of the law *c* : a daring operation against a competitor *d* : the recruiting of personnel (as faculty, executives, or athletes) from competing organizations 3 : the act of eradicating public vices *e* : an attempt by professional operators to deprive stock brokers of (MID7) : to conduct or take part in a raid ~ *vt* : to make a raid on

raider \'rā-dər\ n (1863) : one that raids as *a* : a fast lightly armed ship operating against merchant shipping *b* : a soldier specially trained for close-range fighting *c* : one that attempts a usu. hostile takeover of a business corporation (corporate ~)

rail \'rāl\ n [ME *raile*, fr. MF *raille* rafter, bar, fr. L *regula* ruler, fr. *regere* to keep straight, direct, rule — more at RIGHT] (14c) 1 *a* : a bar extending from one post or support to another and serving as a guard or barrier *b* : a structural member or support 2 *a* : RAILROAD 1 *b* : a light structure serving as a guard at the outer edge of a ship's deck *c* : a horse bounding a racetrack 3 *a* : a bar of rolled steel forming a guide for wheeled vehicles *b* : TRACK 6 *c* : RAILROAD

rail *vt* (14c) : to provide with a railing : FENCE

rail *n, pl* **rail** or **rails** [ME *raile*, fr. MF *reale*] (15c) : any of numerous wading birds (family Rallidae, the rail family) that are of small or medium size and have short rounded wings, a short tail, and usu. very long toes which enable them to run on the soft mud of marshes

rail *vi* [ME, fr. MF *railler* to mock, fr. *OProv railar* to babble, joke, fr. (assumed) VL *ragulare* to bray, fr. LL *ragare* to neigh] (15c) : to revile or scold in harsh, insolent, or abusive language SYN SEE SCOLD — **railer** *n*

railbird \'rāl-ˌbərd\ *n* (1892) : a racing enthusiast who sits on or near the track rail to watch a race or workout

railcar \'-ˌkär\ *n* (1933) : a passenger car with an automotive engine for operation on rails

rail-car \'-ˌkär\ *n* (1836) 1 : a railroad car 2 : a self-propelled railroad car

rail-head \'rāl-ˌhed\ *n* (1896) : a point on a railroad at which traffic may originate or terminate

railing \'rā-liŋ\ *n* (15c) 1 : a barrier consisting of a rail and supports 2 : RAILS also : material for making rails

raillery \'rā-lə-rē\ *n, pl* **-ler-ies** [F *raillerie*, fr. MF, fr. *railler* to mock] (1633) 1 : good-natured ridicule : BANTER 2 : JEST

rail-road \'rāl-ˌrōd, 'rāl-ə-\ *vt* (1825) : a permanent road having a line of rails fixed to ties and laid on a roadbed and providing a track for cars or equipment drawn by locomotives or propelled by self-contained motors; also : such a road and its assets constituting a single property

railroad *vt* (1877) 1 *a* : to convict with undue haste and by means of false charges or insufficient evidence *b* : to push through hastily or without due consideration 2 : to transport by railroad ~ *vi* : to work for a railroad company — **railroader** *n*

railroad (flat) *n* (1947) : an apartment having a series of narrow rooms arranged in line

rail-roading *n* (1870) : construction or operation of a railroad

railroad worm *n* (1909) 1 [prob. fr. its discrimination by railroad] : APPLE MAGGOT 2 [fr. the rows of luminescent spots along its sides making it resemble a lighted train]: the larva or wingless female of any of several fls. American beetles (genus *Phrixothrix* of the family Cucujidae)

rail-splitter \'rāl-ˌsplit-tər\ *n* (1860) : one that makes logs into fence rails

rail-way \'-ˌwā\ *n* (1812) : RAILROAD esp : a railroad operating with light equipment or within a small area

rai-mond \'rā-mənd\ *n* [ME *raymond*, short for *arrayment*, fr. *arrayen* to array] (15c) : CLOTHING, GARMENTS

rain \'rān\ *n, often attrib* [ME *reyn*, fr. OE *regn, rēn*; akin to OHG *regan* rain] (bef. 12c) 1 *a* : water falling in drops condensed from vapor in the atmosphere *b* : the descent of this water *c* : water that has fallen as rain : RAINWATER 2 *a* : a fall of rain : RAINSTORM *b pl* : the rainy season 3 : rainy weather 4 : a heavy fall of particles or bodies

rain *vi* (bef. 12c) 1 : to send down rain 2 : to fall as water or drops from the clouds 3 : to fall like rain ~ *vt* 1 : to pour down 2 : to bestow abundantly — **rain cats and dogs** : to rain heavily

rain-bird \'rān-ˌbərd\ *n* (1559) : any of numerous birds (esp. of the family Cuculidae) whose cries are popularly believed to augur rain

rain-bow \'-ˌbō\ *n* (bef. 12c) 1 : an arc or circle that exhibits in concentric bands the colors of the spectrum and that is formed opposite the sun by the refraction and reflection of the sun's rays in raindrops, spray, or mist 2 *a* : a multicolored array *b* : a wide concentration or range 3 [fr. the impossibility of reaching the rainbow, at whose foot a pot of gold is said to be buried]: an illusory goal or hope 4 : RAINBOW TROUT — **rain-bow-like** *adj*

rainbow fish *n* (1888) : any of numerous brilliantly colored fishes (as a wrasse, parrot fish, or puffer)

rainbow runner *n* (1940) : a large brilliantly marked blue and yellow carangid food and sport fish (*Elagatis bipinnulata*) common in warm seas

rainbow trout *n* (1882) : a large steelhead salmonid fish (*Oncorhynchus mykiss irideus*, *Salmo gairdneri*) of western No. American that is related to the Pacific salmon and is typically greenish above and white on the belly with a pink, red, or lavender stripe along each side of the body and with profuse black dots — compare STEELHEAD

rainbow trout

rain check *n* (1884) 1 : a ticket stub good for a later performance when the scheduled one is rained out 2 : an assurance of a deferred extension of an offer; *esp* : an assurance that a customer can take advantage of a sale later if the item or service offered is not available (as by being sold out)

rain-coat \'rān-ˌkōt\ *n* (1830) : a waterproof or water-resistant coat

rain-drop \'-ˌdräp\ *n* (bef. 12c) : a drop of rain

rain-fall \'-ˌfȯl\ *n* (1854) 1 : the amount of precipitation (as measured by the depth in inches 2 : RAIN 2b

rain forest *n* (1903) 1 : a tropical woodland with an annual rainfall of at least 100 inches (254 centimeters) and marked by lofty broad-leaved evergreen trees forming a continuous canopy — called also *tropical rain forest* 2 : TEMPERATE RAIN FOREST

rain gauge *n* (1769) : an instrument for measuring the quantity of precipitation

rain-maker \'rān-ˌmā-kər\ *n* (1775) 1 : a person who produces or attempts to produce rain by artificial means 2 : a person (as a partner in a law firm) who brings in new business; also : a person whose influence can initiate progress or ensure success — **rain-making** \-ˌmā-kiŋ\ *n*

rain out *vt* (1928) : to interrupt or prevent by rain

rain-proof \'rān-ˌprüf\ *adj* (1831) : impervious to rain

rain-spout \'-ˌspau̇t\ *n* (1922) : GUTTER 1a, also : DOWNSPOUT

rain-squall \'-ˌskwȯl\ *n* (1849) : a squall accompanied by rain

rain-storm \'-ˌstȯrm\ *n* (1616) : a storm of or with rain

rain tree *n* (ca. 1993) : MONKEYPOD

rain-wash \'rān-ˌwäsh, -ˌwȯsh\ *n* (1870) : the washing away of material by rain; also : the material so washed away

rain-water \'-ˌwȯ-tər, -ˌwä-\ *n* (bef. 12c) : water fallen as rain that has not collected soluble matter from the soil and is therefore soft

rain-wear \'-ˌwer, -ˌwar\ *n* (1939) : waterproof or water-resistant clothing

rainy \'rā-nē\ *adj* **rain-i-er**; **-est** (bef. 12c) : marked by, showering with, or bringing rain

rainy day *n* (ca. 1583) : a period of want or need

raise \'rāz\ *vb* **raised**; **rais-ing** [ME, fr. ON *reisa* — more at RISE] *vt* (13c) 1 : to cause or help to rise to a standing position 2 *a* [ARCHAIC] : AROUSE *b* : to stir up : INCITE (~ a rebellion) *c* : to flush (game) 3 *a* : to cover *d* : to mount from or as if from dumb *e* : to establish radio communication with 3 *a* : to set upright by lifting or building *b* : to lift higher *c* : to place higher in rank or dignity : ELEVATE *d* : RESURRECTION, SPIRITUALISM (~ the spirits) *e* : to end or suspend the operation or validity of (~ a siege) 4 : to put together for a purpose : COLLECT (~ funds) 5 *a* : to breed and bring (an animal) to maturity *b* : GROW, CULTIVATE (~ cotton) *c* : to bring up (a child) 6 : RAISE 6 *a* : to give rise to : PROVOKE (~ a commotion) *b* : to give voice to (~ a cheer) 7 : to bring up for consideration or debate (~ an issue) 8 *a* : to increase the strength, intensity, or pitch of *b* : to increase the degree of *c* : to cause to rise in level or amount (~ the rent) *d* (1) : to increase the amount of (a poker bet) (2) : to bet more than (a previous bettor) *e* (1) : to make a higher bridge bid in (a partner's suit) (2) : to increase the bid of (one's partner) 9 : to make light and porous (~ dough) 10 : to cause to succeed 11 : to treat (ugly [a quantity]) by itself a specified number of times 12 : to bring to right on the horizon by approaching (~ land) 13 *a* : to bring up the nap of (cloth) *b* : to loosen (as a blister) to form on the skin 14 : to increase the nominal value of fraudulently (~ a check) 15 : to articulate (a sound) with the tongue in a higher position ~ *vi* 1 *dial* : ARISE 2 : to increase a bet or bid SYN SEE LIFT — **raise an a — raise Cain** or **raise hell** 1 : to act wildly : create a disturbance 2 : to scold or upbraid someone esp. loudly — **raise eyebrows** : to cause surprise or astonishment

raise *n* (1538) 1 : an act of raising or lifting 2 : a rising stretch of road : an upward grade 3 : AMT 3 : an increase in amount : AUGMENTATION 4 : an increase of a bet or bid *b* : an increase in wages or salary 5 : a vertical or inclined opening or passageway connecting one mine working area with another at a higher level

raised *adj* (1599) 1 *a* : done in relief *b* : having a nap 2 : leavened with yeast rather than with baking powder or baking soda

rai-sin \'rā-zᵊn\ *n* [ME, fr. MF *grape*, fr. L *racemus* cluster of grapes or berries — more at RACEME] (14c) 1 : a grape of any of several varieties that has been dried in the sun or by artificial heat

rai-son d'être *also* **rai-son d'etre** \ˌrā-ˌzōⁿ-'detr\ *n* [F] (1864) : reason or justification for existence

raj \'räj\ *n* [Hindi *rāj*, fr. Skt *rājya*, akin to Skt *rājan* king] (1832) : RULE, esp, *often cap* : the former British rule of the Indian subcontinent

ra-ja *or* **ra-jah** \'rä-jə, -ˌjä, -ˌhä, -ˌjȯ(ə)h\ *n* [Hindi *rājā*, fr. Skt *rājan* king — more at ROYAL] (1555) 1 : an Indian or Malay prince or chief 2 : the bearer of a title of nobility among the Hindus

Ra-jab \'rə-ˌjäb\ *n* [Ar] (ca. 1771) : the 7th month of the Islamic year — see MONTH table

Ra-jas-than-i \ˌrä-jə-'stä-nē, -jᵊs-'tha-\ *n* [Hindi *Rājasthānī*, fr. *Rājasthān* Rajasthan] (1901) : the Indo-Aryan dialects of Rajasthan

Raj-put *or* **Raj-poot** \'räj-ˌpu̇t, 'räzh-\ *n* [Hindi *rājpūt*, fr. Skt *rājaputra* king's son, fr. *rājan* king + *putra* son — more at PUNY] (1598) : a member of a dominant military caste of northern India

rake \'rāk\ *n* [ME, fr. OE *raca*; akin to OHG *rahho* rake] (bef. 12c) 1 *a* : an implement equipped with projecting prongs to gather material (as leaves) or for loosening or smoothing the surface of the ground *b* : a machine for gathering hay 2 : an implement like a rake

rake *vt* **raked**; **rak-ing** (13c) 1 : to gather, loosen, or smooth with or as if with a rake 2 : to gain rapidly or in abundance (~ in a fortune) 3 *a* : to touch in passing over lightly *b* : SCRAPE 4 : to examine severely 5 : to search through 6 : RAKISH 6 : to sweep the length of esp. with gunfire 7 : ENGRAVE 7 : to glance over rapidly — **rake** *or* **a rake** (origin unknown) (1626) 1 : inclination from the perpendicular; *esp* : the overhang of a ship's bow or stern 2 : inclination from the horizontal : SLOPE 3 : the angle between the top cutting surface of a tool and a plane perpendicular to the surface of the work 4 : the

PETITIONER'S BRIEF

RECORD
AND
BRIEFS

No. 12-1184

Supreme Court, U.S.
FILED
DEC 2 - 2013
OFFICE OF THE CLERK

IN THE

Supreme Court of the United States

OCTANE FITNESS, LLC,

Petitioner,

v.

ICON HEALTH & FITNESS, INC.,

Respondent.

ON WRIT OF CERTIORARI TO THE UNITED STATES COURT OF APPEALS FOR THE FEDERAL CIRCUIT

BRIEF FOR THE PETITIONER

RUDOLPH A. TELSCHER, JR.
Counsel of Record
KARA R. FUSSNER
STEVEN E. HOLTSHOUSER
DAISY MANNING
HARNESS, DICKEY & PIERCE, PLC
7700 Bonhomme Avenue, Suite 400
St. Louis, MO 63105
(314) 726-7500
rtelscher@hdp.com

Attorneys for Petitioner

249900

COUNSEL PRESS
(800) 274-3321 • (800) 359-6859

Library of Congress
Law Library

QUESTION PRESENTED

Whether a district court, in exercising its discretion to award attorney fees to prevailing accused patent infringers in "exceptional cases" under Title 35, United States Code, Section 285, should use traditional equitable factors guided by the purposes of patent law to protect legitimate patent interests in reasonable ways rather than the Federal Circuit's rigid test requiring both objective baselessness and subjective bad faith?

PARTIES TO THE PROCEEDING AND CORPORATE DISCLOSURE STATEMENT

The Petitioner is Octane Fitness, LLC. Octane Fitness, LLC is wholly owned by OF Holdings, Inc.

The Respondent is Icon Health & Fitness, Inc.

TABLE OF CONTENTS

Page

QUESTION PRESENTED i

PARTIES TO THE PROCEEDING AND CORPORATE DISCLOSURE STATEMENT ii

TABLE OF CONTENTS..... iii

TABLE OF CITED AUTHORITIES vii

OPINIONS BELOW..... 1

BASIS FOR THIS COURT'S JURISDICTION 1

STATUTE INVOLVED..... 2

STATEMENT OF THE CASE 2

A. Icon and Its "Shelf" Patent 6

B. Octane and Its Award-Winning Ellipticals 8

C. Icon's Lawsuit 10

D. The Non-Infringement Rulings and Denial of Fees..... 11

SUMMARY OF THE ARGUMENT..... 13

ARGUMENT..... 17

Table of Contents

Page

I. Section 285 of the Patent Act Confers Broad Discretion on District Courts to Apply Traditional Equitable Factors, Guided by the Purposes of Patent Law, to Determine Whether to Award Fees to a Prevailing Accused Infringer. 17

A. The Plain Language of § 285 Confers Discretion to District Courts to Consider Traditional Equitable Factors in Making Fee Awards. 18

1. The words "may" and "exceptional" confer discretion to assess the case as a whole. 19

2. The Federal Circuit's erroneously transplanted sham litigation test lacks basis in the text of the statute. 22

3. The *Brooks* test deprives § 285 of independent effect and Congress was capable of codifying such restrictions if intended. 25

4. *Brooks* contravenes the *Fogerty* principle by treating prevailing parties disparately under a party-neutral statute. 27

Table of Contents

Page

B. *Brooks* Contravenes Interpretations of the Lanham Act's Textually Identical Fee Statute. 29

C. The Legislative History of Section 285 Confirms Congress' Intent to Confer Broad Discretion upon District Courts. . . .34

D. Decades of Prior Judicial Interpretation of § 285 Validates Use of Traditional Equitable Factors Rather than Strict Requirements. 38

II. Defining "Exceptional" in § 285 According to an Equitable Discretion Test Best Serves the Policies and Purposes of Section 285 and the Patent Act. 41

A. Eliminating Higher Fee Thresholds for Prevailing Accused Infringers Furthers the Goals of Patent Law. 42

B. More, Not Less, Discretion May Curb the Burgeoning Problem of Abusive Patent Litigation. 44

Table of Contents

Page

III. This Court Should Hold That Section 285 Requires District Courts to Exercise Discretion in Determining Fee Awards by Applying Traditional Equitable Factors, Guided by the Purposes of Patent Law, to Protect Legitimate Patent Rights in Reasonable Ways. 48

CONCLUSION 59

TABLE OF CITED AUTHORITIES

Page

Cases

Alyeska Pipeline Service Co. v. Wilderness Soc'y,
421 U.S. 240 (1975) 26

Artvale, Inc. v. Rugby Fabrics Corp.,
363 F.2d 1002 (2d Cir. 1966) 38

Astrue v. Ratliff,
130 S. Ct. 2521 (2010) 27

Bilski v. Kappos,
130 S. Ct. 3218 (2010) 41, 43, 45

Blanc v. Spartan Tool Co.,
168 F.2d 296 (7th Cir. 1948) 36

Bonito Boats, Inc. v. Thunder Craft Boats, Inc.,
489 U.S. 141 (1989) 41, 50

Brooks Mfg. v. Dutailier, Inc.,
393 F.3d 1378 (Fed. Cir. 2005) ..... *passim*

Byram Concretanks, Inc. v.
Warren Concrete Prods. Co. of N.J.,
374 F.2d 649 (3d Cir. 1967) 38

Checkpoint Sys., Inc. v. All-Tag Security S.A.,
711 F.3d 1341 (Fed. Cir. 2013) 47

Christiansburg Garment Co. v. EEOC,
434 U.S. 412 (1978) 26, 37

Cited Authorities

Page

In re Ciprofloxacin Hydrochloride Antitrust Litig.,
544 F.3d 1323 (Fed. Cir. 2008) 43

Circuit City Stores v. Adams,
532 U.S. 105 (2001).....37

Conn. Nat'l Bank v. Germain,
503 U.S. 249 (1992).....18

Daubert v. Merrell Dow Pharmaceuticals, Inc.,
509 U.S. 579 (1993).....57

DePuy Spine, Inc. v. Medtronic Sofamor Danek, Inc.,
567 F.3d 1314 (Fed. Cir. 2009).....47

In re Donaldson Co.,
16 F.3d 1189 (Fed. Cir. 1994).....7

E. R.R. Presidents Conference v.
Noerr Motor Freight, Inc.,
365 U.S. 127 (1961).....24

Eagles, Ltd. v. Am. Eagle Found.,
356 F.3d 724 (6th Cir. 2004) 32

eBay Inc. v. Mercexchange, LLC,
547 U.S. 388 (2006).....42

Eon-Net LP v. Flagstar Bancorp.,
653 F.3d 1314 (Fed. Cir. 2011).....46, 47, 54

Cited Authorities

Page

F.D.I.C. v. Meyer,
510 U.S. 471 (1994) 20

FieldTurf Int'l, Inc. v. Sprinturf, Inc.,
433 F.3d 1366 (Fed. Cir. 2006) 47

Fogerty v. Fantasy, Inc.,
510 U.S. 517 (1994) ..... *passim*

Forest Labs., Inc. v. Abbott Labs.,
339 F.3d 1324 (Fed. Cir. 2003) 22, 47

Gen. Instrument Corp. v. Hughes Aircraft Co.,
399 F.2d 373 (1st Cir. 1968) 39

Hall v. Cole,
412 U.S. 1 (1973) 26

Hartman v. Hallmark Cards, Inc.,
833 F.2d 117 (8th Cir. 1987) 31

Hensley v. Eckerhart,
461 U.S. 424 (1983) 19

Highmark, Inc. v. Allcare Health Mgmt. Sys., Inc.,
701 F.3d 1351 (Fed. Cir. 2012) 25

Highmark, Inc. v. Allcare Health Mgmt. Sys., Inc.,
687 F.3d 1300 (Fed. Cir. 2012), *reh'g and reh'g en banc denied*, 701 F.3d 1351 (Fed Cir. 2012), *cert. granted*, 82 U.S.L.W. 3177 (U.S. Oct. 1, 2013) (No. 12-1163) 25, 28, 48

Cited Authorities

Page

Hughes Aircraft Co. v. Messerschmitt-Boelkow-Blohm, GmbH, 625 F.2d 580 (5th Cir. 1980) 39-40

iLOR, LLC, v. Google, Inc., 631 F.3d 1372 (Fed. Cir. 2011) ..... *passim*

Jama v. Immigration and Customs Enforcement, 543 U.S. 335 (2005) 27

Ji v. Bose Corp., 626 F.3d 116 (1st Cir. 2010) 33

Kahn v. Dynamics Corp. of Am., 508 F.2d 939 (2d Cir. 1974) 40

Kappos v. Hyatt, 132 S. Ct. 1690 (2012) 37

Kearney & Trecker Corp. v. Giddings & Lewis, Inc., 452 F.2d 579 (7th Cir. 1971) 38

Kimbrough v. United States, 552 U.S. 85 (2007) 27

King v. PA Consulting Group, 485 F.3d 577 (10th Cir. 2007) 32, 33

KSR Int'l. Co. v. Teleflex Inc., 550 U.S. 398 (2007) 42

Cited Authorities

Page

Larchmont Eng'g, Inc. v. Toggenburg Ski Ctr.,
444 F.2d 490 (2d Cir. 1971) 40

Laufenberg v. Goldblatt Bros., Inc.,
187 F.2d 823 (7th Cir. 1951).....36

Lear, Inc. v. Adkins,
395 U.S. 653 (1969).....41

Lincoln Elec. Co. v. Linde Air Prods. Co.,
74 F. Supp. 293 (N.D. Ohio 1947) 36, 37

MarcTec, LLC v. Johnson & Johnson,
664 F.3d 907 (Fed. Cir. 2012) 47

Medtronic Navigation, Inc. v. BrainLAB Medizinische Computersysteme GmbH,
603 F.3d 943 (Fed. Cir. 2010) 47

Modine Mfg. Co. v. Allen Group, Inc.,
917 F.2d 538 (Fed. Cir. 1990).....29

Newman v. Piggie Park Enters.,
390 U.S. 400 (1968).....26

Nightingale Home Healthcare, Inc. v. Anodyne Therapy, LLC,
626 F.3d 958 (7th Cir. 2010).....30

Noxell Corp. v. Firehouse No. 1 Bar-B-Que,
771 F.2d 521 (D.C. Cir. 1985) ..... *passim*

Page

Old Reliable Wholesale, Inc. v. Cornell Corp.,
635 F.3d 539 (Fed. Cir. 2011) 25

Orrison v. C. Hoffberger Co.,
190 F.2d 787 (4th Cir. 1951) 36

Park-In-Theatres, Inc. v. Perkins,
190 F.2d 137 (9th Cir. 1951) 36

Philp v. Nock,
84 U.S. (17 Wall.) 460 (1873) 34

Prof'l Real Estate Investors v. Columbia Pictures Indus.,
508 U.S. 49 (1993) ..... *passim*

Reactive Metals & Alloys Corp. v. ESM, Inc.,
769 F.2d 1578 (Fed. Cir. 1985) 23

Rohm & Haas Co. v. Crystal Chem. Co.,
736 F.2d 688 (Fed. Cir.) 35

Schwartz v. Rent-A-Wreck Am. Inc.,
468 Fed. Appx. 238 (4th Cir. 2012) 32, 33

Scotch Whiskey Ass'n v. Majestic Distilling Co.,
958 F.2d 594 (4th Cir. 1992) 31

Scott Fetzer Co. v. House of Vacuums,
381 F.3d 477 (5th Cir. 2004) 33

Page

In re Seagate Tech.,
497 F.3d 1360 (Fed. Cir. 2007) 28

Sebelius v. Cloer,
133 S. Ct. 1886 (2013).....20, 27

Securacomm Consulting, Inc. v. Securacom Inc.,
224 F.3d 273 (3d Cir. 2000) 30, 33

Siebring v. Hansen,
346 F.2d 474 (8th Cir. 1965).....39

Skil Corp. v. Lucerne Prods. Inc.,
503 F.2d 745 (7th Cir. 1974).....39

Sprietsma v. Mercury Marine,
537 U.S. 51 (2002).....25

Springs Window Fashions, LP v. Novo Indus., L.P.,
323 F.3d 989 (Fed. Cir. 2003) 22

Stephen W. Boney, Inc. v. Boney Servs., Inc.,
127 F.3d 821 (9th Cir. 1997) 31

Tamko Roofing Prods. v. Ideal Roofing Co.,
282 F.3d 23 (1st Cir. 2002)..... 30, 33, 50

Taurus IP, LLC v. DaimlerChrysler Corp.,
726 F.3d 1306 (Fed. Cir. 2013) 48

Teese v. Huntingdon,
64 U.S. (23 How.) 2 (1859) 34

Page

Tire Kingdom, Inc. v. Morgan Tire & Auto, Inc.,
253 F.3d 1332 (11th Cir. 2001) 33

True Temper Corp. v. CF&I Steel Corp.,
601 F.2d 495 (10th Cir. 1979) 39

Universal City Studios, Inc. v. Nintendo Co.,
797 F.2d 70 (2d Cir. 1986) 33

Wicker v. Standard Register Co.,
82 F.3d 434 (Fed. Cir. 1996) 29

Yamanouchi Pharm. Co. v. Danbury Pharm., Inc.,
231 F.3d 1339 (Fed. Cir. 2000) 40

Zadvydas v. Davis,
533 U.S. 678 (2001) 19

Statutes

U.S. Const. art. I, §8, cl. 8 41

15 U.S.C. § 1117 ..... *passim*

17 U.S.C. § 505 ..... *passim*

28 U.S.C. § 1254 1

35 U.S.C. § 1 41

35 U.S.C. § 70 ..... 34, 36

Cited Authorities

Page

35 U.S.C. § 103 42

35 U.S.C. § 112 ..... 7, 52

35 U.S.C. § 145 37

35 U.S.C. § 258 35

35 U.S.C. § 271 50

35 U.S.C. § 285 ..... *passim*

42 U.S.C. § 1988 44

42 U.S.C. § 3613 44

Fed. R. Civ. P. 11 ..... 47, 49

Other Authorities

American College Dictionary (1948) 20

F. Scott Kieff, *The Case for Preferring Patent-Validity Litigation Over Second-Window Review and Gold-Plated Patents: When One Size Doesn't Fit All, How Could Two Do the Trick?*, 157 U. Pa. L. Rev. 1937 (2009) 44

Funk & Wagnalls New College Standard Dictionary (1947) 20

Page

Manual of Patent Examining Procedure, Section 2181 7

Michael J. Meurer, *Controlling Opportunistic and Anti-Competitive Intellectual Property Litigation*, 44 B.C. L. Rev. 509 (2003) 45

S. Rep. No. 79-1503 (2d Sess. 1946), *reprinted in* 1946 U.S. Code Cong. Serv. 1386 . . . . . 35, 37-38

S. Rep. No. 82-1979 (2d Sess. 1952), *reprinted in* 1952 U.S.C.C.A.N. 2394 35

S. Rep. No. 93-1400 (2d Sess. 1974), *reprinted in* 1974 U.S.C.C.A.N. 7132 . . . . . 29, 32

U.S. Gov't Accountability Office, GAO-13-465, Intellectual Property: Assessing Factors That Affect Patent Infringement Litigation Could Help Improve Patent Quality (2013) 4

Webster's New College Dictionary (2d Ed. 1949) 20

OPINIONS BELOW

The District Court for the District of Minnesota, after granting summary judgment on Icon Health and Fitness, Inc.'s ("Icon") allegations of patent infringement in favor of Octane Fitness, LLC ("Octane"), denied Octane's motion for attorney's fees under Title 35, United States Code, Section 285. The District Court's Order, dated September 6, 2011, is available at 2011 WL 3900975, and Pet. App. 19a-28a.

Octane cross-appealed the denial of attorney's fees to the United States Court of Appeals for the Federal Circuit. The Federal Circuit affirmed both the grant of summary judgment of non-infringement and the denial of attorney's fees on October 24, 2012; its opinion is available at 496 Fed. Appx. 57, 2012 WL 5237021, and Pet. App. 1a-17a. The order denying the petition for rehearing and rehearing *en banc*, dated December 27, 2012, is reproduced at Pet. App. 87a-88a. On October 1, 2013, this Court granted Octane's Petition for Writ of Certiorari.

BASIS FOR THIS COURT'S JURISDICTION

The opinion and judgment of the court of appeals issued on October 24, 2012. A timely petition for rehearing and rehearing *en banc* was denied on December 27, 2012. On March 27, 2013, Octane filed a petition for writ of certiorari, which was granted on October 1, 2013. This Court has jurisdiction pursuant to 28 U.S.C. § 1254.

STATUTE INVOLVED

At issue in this case is 35 U.S.C. § 285 (2013), which states:

"The court in exceptional cases may award reasonable attorney fees to the prevailing party."

STATEMENT OF THE CASE

Section 285 provides that, in "exceptional cases," a district court "may award reasonable attorney fees to the prevailing party." 35 U.S.C. § 285 (2013). The terms of § 285 grant discretion to identify exceptional cases and award fees. Such discretion should include application of traditional equitable factors guided by the purposes of the Patent Act. Although not exclusive, the most important factors include the strength and reasonableness of the infringement claims, the likelihood of ultimate success, pre-litigation and litigation conduct, economic circumstances, and the need to incentivize defendants to contest allegations which extend a patent's limited monopoly beyond the scope of its terms. Normal cases are those that use patent litigation to protect legitimate patent interests in reasonable ways. Logically, exceptional cases are those that deviate markedly from the norm. The Federal Circuit, however, so severely limits district court discretion to award fees to prevailing accused infringers that § 285 fee awards are essentially non-existent.

Defending patent infringement claims is extremely expensive. Here, it cost Octane over $1.8 million to prevail without a trial, even though a cursory comparison of the competing linkage systems are not remotely similar, Icon's

arguments regarding the scope of its claims stretched credulity beyond reason, Icon's patent was invalid if it covered Octane's linkage and there was little or no likelihood that Icon could prevail on a trial of infringement.

But, unlike other litigation, a patent defendant has no efficient way to obtain resolution of the merits. Pleading requirements are minimal and litigating even to summary judgment entails expensive discovery, experts and claim construction. Against even the weakest of claims, an accused infringer faces "Hobson's Choice": settle and give the plaintiff remedies to which it is not entitled, or spend a larger sum to prevail without any realistic prospect of fee recoupment.

Abusive exploitation of the leverage opportunity this presents is both real and growing. Whether practicing the technology at issue or not, some patentees assert patents in unreasonable ways as a strategy founded on economic coercion. Ordinarily, a company has a disincentive to bring a weak case because it would be forced to pay lawyers only to later lose the case. But some patent plaintiffs, especially bully-type companies with superior economic leverage, exploit the system. Some large competitors, like Icon, use the process itself to hinder smaller competitors, like Octane, either by extracting unwarranted royalties or by siphoning resources. The former raises the cost of goods sold, which gets passed on to consumers, and the latter weakens the smaller competitor via the cost of the litigation.

Some companies build business models around buying patents, rather than developing technology, and suing entire industries to amass small fortunes at the expense

of the American economy and its citizens. These entities are commonly referred to as patent assertion entities or "patent trolls," and their tactics have garnered national attention. The "troll" business model became popular a decade ago, but abusive troll litigation steadily picked up steam during the past five years.[1] The result is that the "goods", i.e., patents, are picked over and the cases asserted by trolls are increasingly weak.

This case does not involve a classic "troll", but does involve a larger competitor asserting a non-practiced patent against a smaller competitor in a troll-like manner. Asserting unreasonably weak patent claims and using the cost of litigation as a weapon of coercion is what all abusive patent cases have in common. No matter how weak the case, abusive plaintiffs know that most accused targets will pay some amount to avoid the high cost of patent litigation. Because prevailing accused infringers have no hope of recouping fees even if they win, federal courts serve as the playing field for extortion.

The evil of such practices runs counter to the purposes of patent laws. Consequences include substantial damage to small and large companies, less money for research and development, increased prices to consumers, undue limitations on competition and a substantial burden on

---

1. "[T]he estimated total number of defendants sued by PMEs [patent monetization entities] more than tripled from 834 in 2007 to 3,401 in 2011, while the increase in the total number of defendants sued by operating companies was not statistically significant." U.S. Gov't Accountability Office, GAO-13-465, Intellectual Property: Assessing Factors That Affect Patent Infringement Litigation Could Help Improve Patent Quality 18-19 (2013).

federal courts. Properly construed, § 285 of the Patent Act provides a viable tool to balance the interests of patentees in bringing meritorious claims against the need to protect accused infringers from grossly unjust results.

In *Brooks Mfg. v. Dutailier, Inc.*, 393 F.3d 1378 (Fed. Cir. 2005), the Federal Circuit shoehorned this Court's test for the "sham" litigation exception to *Noerr-Pennington* antitrust immunity into § 285's definition of "exceptional." Specifically, in the absence of prosecution or litigation misconduct, *Brooks* requires successful patent defendants to prove, by clear and convincing evidence, that plaintiffs' claims were *both* (1) objectively baseless, and (2) brought in subjective bad faith. *Id.* at 1381. This rigid framework places an insurmountable burden on successful accused infringers, like Octane, particularly where the injustice of the case lies predominantly in the weakness of the patent contentions. It also deprives district courts of their traditional equitable discretion to consider all relevant circumstances. This is in sharp contrast to other areas of intellectual property law, where courts have considerable discretion to award fees consistent with equitable considerations and the purposes of the particular intellectual property regime. *See* 15 US.C. § 1117(a); 17 U.S.C. § 505.

A correct interpretation of § 285, consistent with its terms, the canons of statutory interpretation, judicial precedent and good policy would restore balance to the patent enforcement system. The Patent Act tries to reconcile the tension between stimulating innovation through a strong patent system and stifling competition through the grant of monopoly rights. This case presents the proper vehicle to restore district courts' discretion

under § 285 to remedy abuse of the patent system through unreasonable patent litigation.

A. Icon and Its "Shelf" Patent

In the late 1990's, Icon invented a specific linkage system for an elliptical machine. An elliptical machine is a piece of exercise equipment having two foot pedals that travel in an elliptical path. Many elliptical machine designs existed at the time of Icon's invention, U.S. Patent No. 6,019,710 ("the '710 patent"). SA-10-SA-23. The unique and simple linkage disclosed in the '710 patent is a "stroke rail" that moves in a straight line within a c-channel at one end while the other end moves in an elliptical path. *Id.* at SA-18 at 3:64-4:17. As shown (right), the "stroke rail" connects the foot rail to the frame. *Id.* The "c-channel" (84) constrains the first end of the stroke rail to move up-and-down in a straight line ("linear reciprocating displacement"), while the other end moves in an elliptical path. *Id.* at SA-19 at 6:3-42.

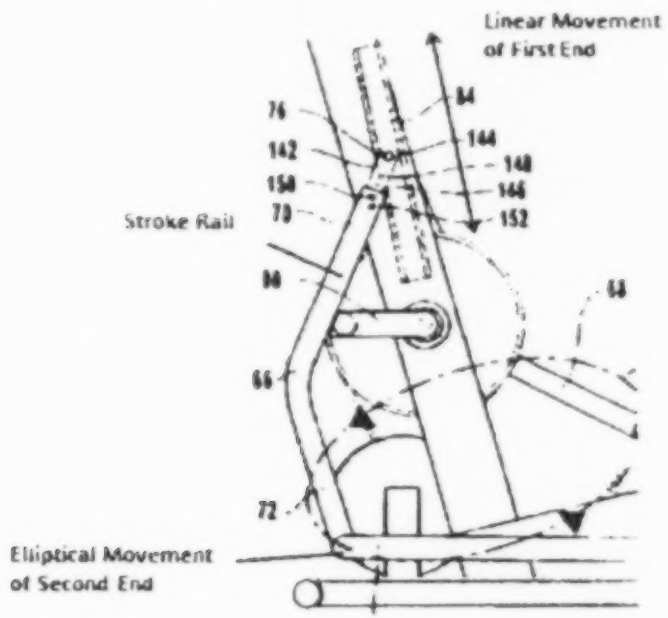

The patent examiner who granted the '710 patent regarded the "stroke rails, each having one end hingedly connected to a respective foot rail and having the opposite end connected to the frame" and producing "linear reciprocating movement" as the point of novelty in the '710 patent and granted the patent on this basis. J.A. 123a, at ¶3. To claim these inventive aspects, certain elements were recited as a means for performing a specified function as permitted by 35 U.S.C. § 112,¶6 (now codified at § 112(f)). For example, Claim 1(d) of the '710 patent, recited a:

> (d) *means for connecting* each *stroke rail* to the frame *such that linear reciprocating displacement* of the first end of each stroke rail results in displacement of the second end of each stroke rail in a substantially elliptical path;[2]

SA-20 at 7:11–26 (emphasis added). As it must, the specification of the '710 patent discloses the structure which performs the recited functions, consistent with the figure above (i.e., the c-channel and related linkage structures). *Id.*

Reading the claims and specification together, essential elements of Icon's invention are: an adjustable stride elliptical machine in which (1) a stroke rail extends

---

2. It was undisputed that this element is a means-plus-function limitation under 35 U.S.C. § 112, ¶ 6. The legal significance is that the structure which corresponds to the recited function *must* be disclosed in the specification, else the patent is invalid due to a "failure to point out and distinctly claim the invention." *See* Manual of Patent Examining Procedure, Section 2181 (II) (*citing In re Donaldson Co.*, 16 F.3d 1189, 1195 (Fed. Cir. 1994) (en banc)).

from the frame to the foot rail, (2) one end of the stroke rail is connected via a c-channel or similar structure in such a way that (3) one end of the stroke rail moves back and forth in a straight line while the other end of the stroke rail moves in an elliptical path. SA-17-SA-21. Both the District Court and the Federal Circuit agreed the '710 patent requires these elements.

Icon's unique idea did not work. Icon never commercialized an elliptical machine under the '710 patent. J.A. 100a-108a; 117a. Instead, Icon sold a different machine it did not invent, and paid a royalty to a competitor for the linkage technology. C.A. App. A1941.

B. Octane and Its Award-Winning Ellipticals

Octane was a much smaller start-up competitor experiencing success with its lines of high-end elliptical machines. J.A. 115a-116a. It did not copy the '710 patent technology. Instead, Octane licensed a different patented linkage technology for its successful Q45 and Q47 machines. J.A. 110a-113a; SA-25-SA-48.

Octane's machines do not employ a linkage *remotely* similar to that disclosed in the '710 patent. Octane uses neither a "stroke rail" nor a part that moves in a straight line within a "c-channel," or any similar structure. *Compare* J.A. 261a-262a with SA-10-SA-23. A visual comparison and review of the '710 patent claims easily confirm that the collection of parts, how they interact, and the overall principles of operation are fundamentally different.

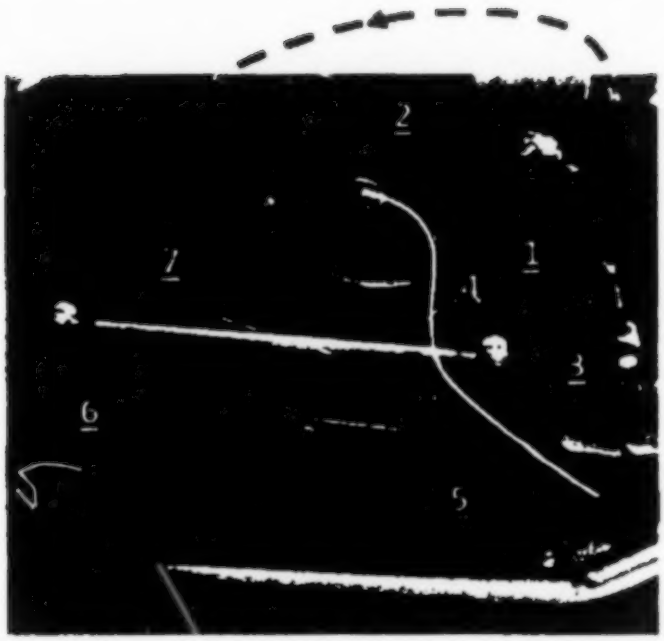

The Q47 machine, depicted and annotated by counsel, utilizes a crank arm (1) on a flywheel (2) connected to a swing arm (3). C.A. App. A1964; J.A. 262a; SA-34. The swing arm, in turn, is connected to the actuator casting (4). J.A. 262a. On one end, the actuator casting is connected to a rocker link (5) and the rocker link is connected to the frame (6) of the elliptical machine. *Id.* On the other end, the actuator casting connects to a foot rail (7). *Id.* In operation, the fly wheel turns lifting the entire linkage such that the foot rail is moved in an elliptical path and the rocker link moves through the air, at the end opposite the frame, in an arced path (as shown by the hashed lines in the photo). J.A. video. The elliptical path is made variable by changing the angle between the actuator casting and swing arm. *Id.*

The Q45 is similar to the Q47, but instead of a swing arm the Q45 actuator casting supports a motor (8), and the foot rail (7) is attached to an integrated screw (9) on the motor, all of which operate to vary the size of the elliptical path. J.A. 261a; SA-39-SA-48.

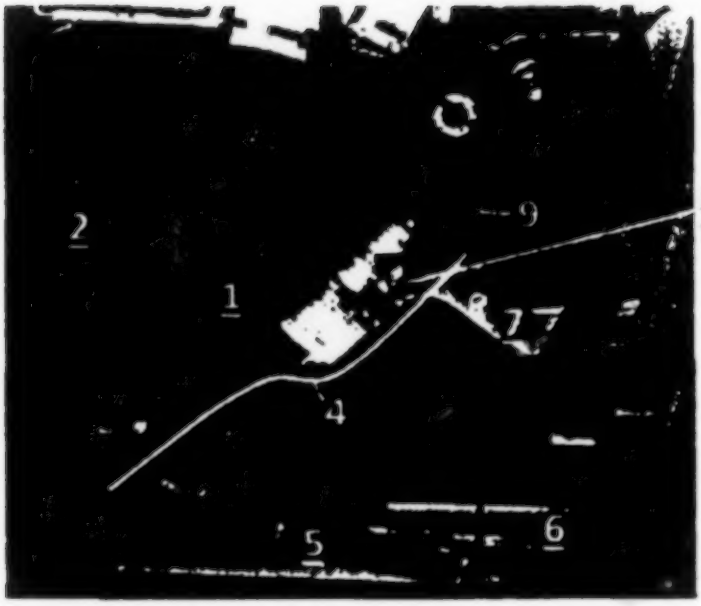

A video demonstrating the movement of the three linkages and shown to the district court is included at the end of the Joint Appendix. It shows the obvious lack of infringement.[3] J.A. video.

C. Icon's Lawsuit

After Octane's market success, Icon brought suit for patent infringement on April 23, 2008. J.A. 40a-49a. E-mails uncovered in the litigation reflected that Icon took an "old patent" it had "sitting on the shelf" and "thr[e]w" it at Octane. J.A. 274a; SA-72. As articulated by Icon's Vice President of Global Sales, Icon was "[n]ot only coming out with a great product **to go after** [Octane], ***but throwing a lawsuit on top of that***," and that Icon was asserting a

3. In the video, Icon's technology is demonstrated by a prototype because the '710 patent was never successfully commercialized. The Q45 and Q47 machines shown in the video are the actual products marketed by Octane.

defunct patent because it was "just looking for royalties." J.A. 391a; SA-72.

Icon initially sued Octane alleging infringement of two unrelated patents: the '710 patent (SA-10-SA-21) and U.S. Patent No. 5,104,120, entitled "Exercise Machine Control System" ("the '120 patent") (SA-1-SA-9). One year into the litigation, Icon was forced to voluntarily dismiss its '120 patent claims after Octane learned of an adverse claim construction ruling Icon received in an Eastern District of Texas infringement action. J.A. 60a-62a.

Icon (a Utah company) also initially brought the suit in California by joining an Octane customer located there. J.A. 40a-49a. On motion by Octane (a Minnesota company), that action was severed and the case against Octane transferred to Minnesota, while the case against the Octane distributor was dismissed. J.A. 50a-59a. Even though the complaint only mentioned Octane's Q47 machine, Icon broadly sought discovery of *every* Octane product, ultimately asserting that Octane's Q47 and Q45 series machines infringed the '710 patent. J.A. 40a-49a; 79a-91a.

D. The Non-Infringement Rulings and Denial of Fees.

In June 2010, after two years of expensive litigation and repeated efforts to resolve the case, Octane moved for summary judgment of non-infringement of the '710 patent. J.A. 14a-16a. At Icon's insistence, the district court held a separate claim-construction hearing, J.A. 17a, and in December 2010, two and one-half years into the lawsuit, the court issued a Memorandum Opinion and

Order construing various terms of the '710 patent. Pet. App. 62a-86a. In that Opinion, the district court largely adopted Octane's constructions, and rejected Icon's proposed constructions. *Id.*

Undeterred, Icon continued to assert infringement and Octane renewed its motion for summary judgment of non-infringement. J.A. 22a-24a. Following another round of briefing and hearing, the district court granted the motion on June 17, 2011, finding *multiple* claim elements lacking, both literally and under the doctrine of equivalents, as a matter of law. Pet. App. 31a-61a. Icon appealed and the Federal Circuit affirmed the findings, characterizing one of Icon's arguments as "without merit" and, like the district court, finding *multiple* claim limitations absent from the accused products. Pet. App. 1a-17a.

Meanwhile, in the district court, Octane moved for an award of attorney fees under § 285. J.A. 250a-273a. The district court applied the Federal Circuit's narrow *Brooks* standard, and consequently disregarded facts that did not fit within that rubric. Pet. App. 19a-28a. For example, the district court deemed irrelevant the fact that Icon was a larger competitor that never commercialized the '710 patent. *Id.* at 27a-28a. It also disregarded the fact that Icon had intentionally brought the suit in the inconvenient venue of California. *Id.* at 19a-28a. According to the district court, "[s]imply bringing suit to gain a competitive advantage is not evidence of bad faith" as the Federal Circuit has articulated the standard. *Id.* at 28a. Under the Federal Circuit's strict test, the district court denied Octane's motion for fees. *Id.* Octane appealed, and in the consolidated appeal, the Federal Circuit affirmed the district court's denial of fees. *Id.* at 17a.

The Federal Circuit summarily concluded that "the court did not err in denying Octane's motion to find the case exceptional," and stated "[w]e have no reason to revisit the settled standard for exceptionality." *Id.* Consequently, Octane is left to bear the nearly $2 million in fees it was forced to incur to fend off Icon's meritless claims. Octane filed a Petition for Rehearing and Rehearing En Banc, which was also summarily denied. *Id.* at 87a-88a. This Court granted Octane's Petition for a Writ of Certiorari on October 1, 2013.

SUMMARY OF THE ARGUMENT

Section 285 of the Patent Act provides that "[t]he court in exceptional cases may award reasonable attorney fees to the prevailing party." 35 U.S.C. § 285 (2013). Properly interpreted and applied, § 285 would curb patent litigation abuse. On the books since 1946, § 285 authorizes district courts to exercise equitable discretion and award fees to remedy abusive, unjust patent litigation. But, as to prevailing accused infringers, the Federal Circuit's *Brooks* decision largely eviscerates § 285 and allows plaintiffs to bring abusive and weak patent suits without fear of a fee award. *Brooks Mfg. v. Dutailier, Inc.*, 393 F.3d 1378 (Fed. Cir. 2005). Viewing § 285 as penal, *Brooks* held that absent litigation misconduct or patent procurement fraud, "*sanctions* may be imposed against the patentee *only if both* (1) the litigation is brought in *subjective bad faith*, and (2) the litigation is *objectively baseless*." *Id.* at 1381. (emphases added). This rigid two-prong test should be rejected. This Court should interpret § 285 to permit district courts in patent cases to consider traditional equitable factors, guided by the purposes of patent law, in granting fee awards.

A remedial rather than penal interpretation of § 285 is clearly supported by its text and history, interpretations of the textually identical Lanham Act fee-shifting provision, traditional equitable discretion granted to district courts in considering fee awards, decades of judicial interpretations of § 285 and the purposes of the Patent Act. *Brooks* actually contributes to the problem of patent litigation abuse.

First, the plain language of the statute implies a broad grant of equitable discretion. The statute provides that courts "may" award fees "in exceptional cases." 35 U.S.C. § 285. In *Noxell Corp. v. Firehouse No. 1 Bar-B-Que*, 771 F.2d 521, 526-27 (D.C. Cir. 1985), the District of Columbia Circuit held the term "exceptional" in the Lanham Act's textually identical fee-shifting provision to grant equitable discretion to district courts. Similarly, in *Fogerty v. Fantasy, Inc.*, 510 U.S. 517 (1994), this Court interpreted the word "may" in the closely related fee-shifting provision of the Copyright Act to imply a grant of equitable discretion to district courts.

By contrast, the *Brooks* test is not rooted in Congress's language. It was inaptly transplanted from the "sham litigation" exception to *Noerr-Pennington* antitrust immunity. *See Prof'l Real Estate Investors v. Columbia Pictures Indus.*, 508 U.S. 49, 60-61 (1993) ("*PRE*"). *PRE's* strict test is based on First Amendment values—values not implicated by fee-shifting in patent litigation.

Furthermore, an equitable discretion test for defining "exceptional" gives § 285 independent effect, whereas *Brooks* does not. District courts do not need § 285 to award fees if objectively baseless litigation is brought

in subjective bad faith, because they possess inherent authority to sanction such conduct. This Court has invoked this principle to reject narrow interpretations of similar and related fee-shifting statutes. In addition, unlike *Brooks*, the equitable discretion test does not judicially legislate specificity into Congress's purposefully general language. Had it desired the restrictive specificity of *Brooks*, Congress knew how to do so in § 285.

The equitable discretion test is supported by judicial interpretation of trademark and copyright fee-shifting statutes. Federal courts of appeals interpret the Lanham Act's identical fee-shifting language according to traditional equitable principles and reject rigid formulas. Similarly, in *Fogerty*, this Court ruled that a non-exclusive list of traditional equitable factors guide application of the Copyright Act's fee-shifting provision, noting "[t]here is no precise rule or formula for making these determinations, but instead equitable discretion should be exercised in light of the considerations we have identified." 510 U.S. at 534 (quotation marks omitted).

The equitable discretion test also follows *Fogerty's* dictate of even-handed application of party-neutral fee statutes. *Brooks* unfairly treats accused infringers more harshly than patentees. A patentee who proves willful infringement—defendant acted despite a high likelihood it infringed—qualifies for attorney's fees as well as treble damages. Thus, patentees receive fee awards far more frequently than accused infringers. Section 285 provides no basis for such disparate treatment.

Section 285's legislative history, sparse as it is, also contradicts the Federal Circuit's interpretation. It

confirms that Congress intended a broad conferral of equitable discretion upon the district courts to grant fee awards to wrongfully accused defendants to prevent "gross injustice." The rigid *Brooks* test also conflicts with decades of judicial interpretation of § 285 pre-dating establishment of the Federal Circuit. These cases interpreted § 285 as conferring general equitable discretion to the district courts.

The equitable discretion test compliments rather than hinders the purposes of § 285 and the Patent Act as a whole. The Patent Act cultivates a dynamic tension between encouraging innovation and impeding progress. The flexibility and discretion of traditional equity are best suited to allow the district courts to fairly strike the needed balance. *Brooks* incentivizes unbalanced protection of patent interests and its disparate treatment of parties is at odds with the purposes of fairness reflected in patent law. The timing is particularly unfortunate—the historical moment when litigation abuse by some patentees is a grave and growing national problem.

Brooks's rigid test for fee awards to prevailing accused infringers is a legal anomaly. There is no good reason why the same words should mean one thing in the Lanham Act and another in the Patent Act. Similarly, there is no good reason why wrongfully accused defendants should be treated less favorably than successful patentees. The Federal Circuit imposes nearly insurmountable hurdles to fee awards even though patent litigation abuse has become a business model.

The undisputed facts here demonstrate how the interplay between equity and the purposes of patent

law provide the best workable rubric for identifying "exceptional" cases warranting fees. Viewed as a whole, the degree of weakness of Icon's infringement claims and theories, the circumstantial evidence of an anti-competitive purpose, Icon's conduct of the litigation, the lack of a legitimate patent interest, and the mismatched litigation resources of the parties make it exceptionally unfair for Octane to bear all or part of its fees. In fact, the circumstances of this case are so compelling that denial of fees was an abuse of discretion under any reasonable application of § 285. Accordingly, this Court should confirm that Congress intended a broad conferral of traditional equitable discretion guided by the purposes of patent law.

ARGUMENT

I. Section 285 of the Patent Act Confers Broad Discretion on District Courts to Apply Traditional Equitable Factors, Guided by the Purposes of Patent Law, to Determine Whether to Award Fees to a Prevailing Accused Infringer.

Section 285 of the Patent Act confers broad discretion on district courts to apply traditional equitable factors, guided by the purposes of patent law, to determine whether to award fees to a prevailing accused infringer. This is referred to herein as the "equitable discretion" test and it should be used by district courts to define "exceptional cases" warranting fee awards to a prevailing party.

Awards of attorney's fees in patent cases are governed by § 285 of the Patent Act, which provides: "[t]he court in exceptional cases may award reasonable attorney fees

to the prevailing party." 35 U.S.C. § 285 (2013). Until recently, § 285 was understood to grant district courts equitable discretion to identify "exceptional cases" by considering the totality of the relevant circumstances. But, in 2005, the Federal Circuit adopted a rigid two-pronged test to govern fee-shifting awards to accused infringers in patent cases, holding that "[a]bsent misconduct in conduct of the litigation or in securing the patent, sanctions may be imposed against the patentee only if both (1) the litigation is brought in subjective bad faith, and (2) the litigation is objectively baseless." *Brooks Furniture Mfg., v. Dutailier Int'l, Inc.*, 393 F.3d 1378, 1381 (Fed. Cir. 2005).

Brooks's rigid formulation lacks any basis in the text of the statute, creates a double standard for plaintiffs and defendants, runs roughshod over the discretion granted to district courts by the clear terms of § 285, directly conflicts with interpretations of the textually identical Lanham Act fee statute, and departs from decades of judicial interpretation of § 285. This Court should reject the Federal Circuit's novel two-pronged test and restore discretion to district courts.

A. The Plain Language of § 285 Confers Discretion to District Courts to Consider Traditional Equitable Factors in Making Fee Awards.

The starting point of all statutory interpretation is the language of the statute. *Conn. Nat'l Bank v. Germain*, 503 U.S. 249, 253-54 (1992). Section 285 provides that "[t]he court in *exceptional* cases *may* award reasonable attorney fees...." 35 U.S.C. § 285 (emphasis added). The plain import of "may" and "exceptional" is a broad grant of discretion.

1. The words "may" and "exceptional" confer discretion to assess the case as a whole.

The language of § 285 affords district courts broad equitable discretion when determining whether an award of fees is appropriate. This Court's decision in *Fogerty v. Fantasy, Inc.*, 510 U.S. 517 (1994), is on point. *Fogerty* interpreted the Copyright Act's fee-shifting provision, 17 U.S.C. § 505, which states that "the court *may* ... award a reasonable attorney's fee to the prevailing party as part of the costs." *Id.* at 519. Rejecting a proposed interpretation that would render fee-shifting automatic, this Court emphasized that: "[t]he word 'may' clearly connotes discretion. The automatic awarding of attorney's fees to the prevailing party would pretermit the exercise of that discretion." *Id.* at 533. This Court found the award of fees discretionary and explicitly rejected any precise formula or test to govern discretion: "There is no precise rule or formula for making these determinations, but instead equitable discretion should be exercised 'in light of the considerations [this Court] has identified." *Id.* (*quoting Hensley v. Eckerhart*, 461 U.S. 424, 436-37 (1983)). This Court further explained that in making such discretionary awards, courts should consider a wide and "nonexclusive" range of factors. *Fogerty*, 510 U.S. at 534 n. 19. Other cases support this interpretation of "may." *See, e.g., Zadvydas v. Davis*, 533 U.S. 678, 697 (2001) (stating that "'may' suggests discretion").

The term "exceptional" was added to the statute in 1952, replacing the phrase "in its discretion" in the 1946 statute. *See infra*, Part I.C. This change was understood, at the time and for several decades thereafter, to be a non-substantive change maintaining courts' discretion to award fees. *Id.*

Apart from the legislative history, the open-ended nature of the word "exceptional" also indicates discretion. Because "exceptional" is not a legal term of art, nor defined elsewhere in the Patent Act, it should be construed in accordance with its ordinary meaning. *Sebelius v. Cloer*, 133 S. Ct. 1886, 1893 (2013); *F.D.I.C. v. Meyer*, 510 U.S. 471, 476 (1994). The ordinary meaning of "exceptional" at the time it was added to the statute was:

> **exceptional**. adj. Forming an exception; uncommon; hence, superior.
>
> Syn. **exception, exceptionable**. That is exceptional which is an exception, or out of the ordinary; that is exceptionable to which exception may be taken, and which is therefore objectionable.

Webster's New College Dictionary 287 (2d Ed. 1949); *see also* The American College Dictionary 419 (1948) (defining "exceptional" as "forming an exception or unusual instance; unusual; extraordinary; Syn. uncommon; peculiar; singular; superior"); Funk & Wagnalls New College Standard Dictionary 408 (1947) (defining "exceptional" as "unusual or uncommon; superior"). Applying these definitions, "exceptional" denotes discretion to courts to award fees, not in the normal course, but where the exercise of discretion warrants an exception.

This is consistent with past interpretations of the well-reasoned opinions of lower courts in intellectual property cases. In 1985, a panel of the D.C. Circuit interpreted the fee-shifting provision of the Lanham Act, 15 U.S.C.

§ 1117(a), which is textually *identical* to § 285. *Noxell Corp. v. Firehouse No. 1 Bar-B-Que*, 771 F.2d 521, 526 (D.C. Cir. 1985). *Noxell* relied on the ordinary meaning of "exceptional" to reject the claim that fee-shifting awards must be supported by subjective bad faith. *Id.* at 526. The court stated, "we think 'exceptional,' as Congress used the word in section 35 of the Lanham Act, is most reasonably read to mean what the word is generally understood to indicate—uncommon, not run-of-the-mill." *Id.* Relying "[o]n that familiar construction," *Noxell* rejected a "niggardly reading" of § 1117(a) that would have required "overt bad faith" to support an award of fees in trademark cases. *Id.* Rather, *Noxell* held that "when Congress 'limit[ed] attorney fees to 'exceptional case' and [placed] the award of attorney fees...'within the discretion of the court'...the legislature did not intend to harness judges to a 'hardly ever' rule." *Id.* (citations omitted). On this basis, *Noxell* found that the existence of "more than a hint of 'economic coercion'" in the plaintiff's selection of an inconvenient forum rendered the case "exceptional." *Id.* at 526-527.

Under *Fogerty* and *Noxell*, the ordinary meaning of the statutory terms "may" and "exceptional": (1) implies a broad grant of discretionary authority to the district courts to consider a non-exclusive list of equitable factors in granting fee awards; and (2) forecloses the Federal Circuit's novel requirement that a prevailing defendant must prove that the case was "baseless" and "brought in subjective bad faith." *Brooks*, 393 F.3d at 1381.

2. The Federal Circuit's erroneously transplanted sham litigation test lacks basis in the text of the statute.

Brooks lacks any basis in the text of the statute. The Federal Circuit directs that the determination to award fees under § 285 first requires the prevailing party to establish, by clear and convincing evidence, that the case is exceptional; if so, only then may the court exercise its discretion to determine whether to award fees. *Forest Labs., Inc. v. Abbott Labs.*, 339 F.3d 1324, 1327 (Fed. Cir. 2003). For prevailing accused infringers, though, absent patent fraud or litigation misconduct, the first step requires satisfaction of a two-prong definition of "exceptional"—namely, that the patentee's claim is both (1) "brought in subjective bad faith"; *and* (2) "objectively baseless." *Brooks*, 393 F.3d at 1381. *See iLOR, LLC, v. Google, Inc.*, 631 F.3d 1372, 1377 (Fed. Cir. 2011). If *either* requirement fails, fees may not be awarded. *Id.*

On the objective prong, the Federal Circuit indicated that patent litigation is "objectively baseless" *only* when a party's assertions are "so unreasonable that no reasonable litigant could believe [they] would succeed." *iLOR*, 631 F.3d at 1378. The subjective bad faith prong is made more difficult by *Brooks*'s recognition of a presumption that patent infringement claims are made in good faith. *Brooks*, 393 F.3d at 1382 (*citing Springs Window Fashions, LP v. Novo Indus., L.P.*, 323 F.3d 989, 999 (Fed. Cir. 2003)). This presumption is surpassed only by clear and convincing evidence that the patentee knowingly pursued a baseless case. *Id.* The district court here recognized the subjective

burden: "'The Plaintiff's case must have no objective foundation, and the plaintiff must actually know this.'" Pet. App. 25a (*quoting iLOR*, 631 F.3d at 1377). In effect, *Brooks* requires a showing that the suit was frivolous and the district court here expressed it as such. *Id.* at 23a, 27a.

This elaborate apparatus of a two-step process, with one step composed of a two-part test; steep burden of proof[4]; and a rebuttable presumption lacks any basis in the text of the statute. Nothing in § 285 mandates (1) a two-step process with discretion applying only after the first step; (2) proof of both exceptionality and plaintiff's bad faith state of mind by clear and convincing evidence; (3) for an accused infringer, subjective bad faith *and* objective baselessness; or (4) a presumption of good faith for an infringement suit.

Brooks's genesis is the definition of the "sham" exception to the *Noerr-Pennington* doctrine of antitrust immunity. *See Brooks*, 393 F.3d at 1381 (*citing PRE*, 508 U.S. at 60-61). In the fifty-plus years since the enactment of § 285, no previous opinion articulated such a test; it was lifted wholesale from *PRE*.

The stringent two-prong *PRE* test is inappropriate in this context. The *Noerr-Pennington* doctrine provides

---

4. The requirement that the quantum of proof be "clear and convincing" dates back to *Reactive Metals & Alloys Corp. v. ESM, Inc.*, 769 F.2d 1578, 1582 (Fed. Cir. 1985), wherein the Federal Circuit, citing one of its own cases addressing the burden for proving *invalidity and inequitable conduct*, imported the clear and convincing standard of proof into its § 285 analysis.

that antitrust liability normally does not apply to those petitioning the government. *E. R.R. Presidents Conference v. Noerr Motor Freight, Inc.*, 365 U.S. 127 (1961). However, *Noerr* recognized a narrow exception for "sham" activities that are mere "attempt[s] to interfere directly with the business relationships of a competitor." *PRE*, 508 U.S. at 56 (*quoting Noerr*, 365 U.S. at 144). Because exceptions to *Noerr* immunity directly implicate First Amendment freedoms, the "sham" exception is narrowly construed. For example, even activity that is subjectively motivated by an improper anticompetitive purpose remains protected as long as there is an "objectively reasonable" basis for the action. *Id.* at 57. Thus, to preserve these critical constitutional values, *PRE* adopted a stringent test that limited trial court discretion. *Id.* at 60.

The First Amendment concerns underlying *PRE*'s stringent test have no application in the context of objectionably weak patent suits or fee-shifting statutes in general. Further, the consequences are not remotely comparable. In an "exceptional" patent case, one party must pay another's reasonable attorney's fees. A "sham" litigant in the *Noerr* context is exposed to an independent cause of action under the antitrust statutes, with exposure to treble damages, injunctive relief, and an independent fee-shifting statute.

To Petitioner's knowledge, no other court has ever sought to transplant the extremely stringent *PRE* test to a garden-variety fee-shifting statute like § 285. The *PRE* test is particularly ill-adapted to govern fee awards in patent cases, because satisfaction is essentially unattainable. Given that the Federal Circuit itself admits that its high reversal rate creates a legal environment of

unpredictability in which courts and parties are "simply unable to forecast what [the Federal Circuit] will decide", how can even the weakest of infringement claims be deemed objectively baseless? *Highmark, Inc. v. Allcare Health Mgmt. Sys., Inc.*, 701 F.3d 1351, 1356 (Fed. Cir. 2012). Given the relative rarity of evidence of a party's state of mind in filing suit, how can the subjective bad faith prong be reasonably satisfied in abusive patent cases? In relying on *PRE* to define "exceptional," the Federal Circuit departed substantially from a common sense reading of § 285.

3. The *Brooks* test deprives § 285 of independent effect and Congress was capable of codifying such restrictions if intended.

The Federal Circuit's elaborate structure also violates the well-established canon of statutory construction that courts should not render statutory provisions to be without effect. *See Sprietsma v. Mercury Marine*, 537 U.S. 51, 63 (2002). As noted above, *Brooks* limits an award of fees to prevailing accused infringers to three egregious instances: fraud by the patentee in procuring the patent, litigation misconduct[5] or sham litigation. This narrow interpretation deprives § 285 of independent effect, because district courts already possess inherent authority to award fees in such cases. Courts have long recognized

5. The Federal Circuit defines "litigation misconduct" narrowly, requiring independently sanctionable conduct by a party or his counsel during the course of the litigation. *See Old Reliable Wholesale, Inc. v. Cornell Corp.*, 635 F.3d 539, 549 (Fed. Cir. 2011) (rejecting notion that failure to engage in settlement negotiations constituted litigation misconduct and vacating fee award).

an exception to the general rule against fee-shifting for cases of litigation misconduct or bad faith. *Hall v. Cole*, 412 U.S. 1, 5 (1973). *See also Christiansburg Garment Co. v. EEOC*, 434 U.S. 412, 419 (1978).

This Court has repeatedly invoked this principle to reject narrow interpretations of fee-shifting statutes. For example, in *Newman v. Piggie Park Enterprises.*, 390 U.S. 400, 402 (1968), this Court rejected an interpretation of the attorney fee-shifting provision of Title II of the Civil Rights Act that would have limited its application to cases where defendants acted in subjective bad faith. It noted that, under such a narrow interpretation, "no new statutory provision would have been necessary, for it has long been held that a federal court may award counsel fees to a successful plaintiff where a defense has been maintained 'in bad faith, vexatiously, wantonly, or for oppressive reasons.'" *Id.* at 402 n. 4 (citation omitted). Similarly, in *Christiansburg*, this Court rejected the argument that a fee award under Title VII was limited to cases of subjective bad faith by a plaintiff, because "no statutory provision would have been necessary." *Christiansburg*, 434 U.S. at 419.

This principle was also endorsed in *Noxell*, which addressed the textually identical fee-shifting provision of the Lanham Act, 15 U.S.C. § 1117(a). 771 F.2d at 521. *Noxell* rejected the notion that Congress intended "exceptional" cases to be limited to cases of bad faith, because "that exception to the 'American rule'...is always available...." *Id.* at 526 (*quoting Alyeska Pipeline Serv. Co. v. Wilderness Soc'y*, 421 U.S. 240, 258-59 (1975)). To avoid a narrow reading of § 1117(a) that would render its terms superfluous, the court held that "[s]omething less than 'bad faith'...suffices to mark a case as 'exceptional.'" *Id.*

By imposing elaborate specificity upon general statutory language, the Federal Circuit's interpretation also violates the well-settled rule of statutory construction that courts should not presume to impose statutory restrictions that Congress was capable of enacting, but did not. This Court "do[es] not lightly assume that Congress has omitted from its adopted text requirements that it nonetheless intends to apply." *Jama v. Immigration and Customs Enforcement*, 543 U.S. 335, 341 (2005). *See also Kimbrough v. United States*, 552 U.S. 85, 103 (2007). This Court has recently applied this canon to fee-shifting statutes. *See Sebelius*, 133 S. Ct. at 1893 ("If Congress had intended to limit fee awards to timely petitions, it could easily have done so."); *Astrue v. Ratliff*, 130 S. Ct. 2521, 2527 (2010) ("Congress knows how to make fee awards payable directly to attorneys where it desires to do so."). Here, Congress knew how to define the terms of the statute specifically and limit its application to particular cases, but it chose not to do so. This Court should not "lightly assume that Congress has omitted from its adopted text," but "nonetheless intends to apply," the judicially constructed apparatus of the Federal Circuit. *Jama*, 543 U.S. at 341.

4. *Brooks* contravenes the *Fogerty* principle by treating prevailing parties disparately under a party-neutral statute.

A further problem with the Federal Circuit's *Brooks* test is that it imposes disparate treatment on patent plaintiffs and defendants. This implicates this Court's directive in *Fogerty*, interpreting the parallel fee-shifting provision of the Copyright Act, 17 U.S.C. § 505, that "[p]revailing plaintiffs and prevailing defendants are to be treated alike" for purposes of fee awards in copyright

cases. 510 U.S. at 534. In so holding, this Court cited § 285 and "note[d] that the federal fee-shifting statutes in the patent and trademark fields, which are more closely related to that of copyright, support a party-neutral approach." *Id.* at 525 n. 12.

The *Brooks* test contravenes *Fogerty's* principle by creating a more difficult fee award standard for prevailing accused infringers than for patentees. While accused infringers must show the plaintiff's claims were objectively baseless, or in other words, that "no reasonable litigant could realistically expect success on the merits," *iLOR*, 631 F.3d at 1376 (*quoting PRE*, 508 U.S. at 60), the Federal Circuit allows a prevailing *patentee* to recover fees if it can show "willful infringement" by establishing "that the infringer acted despite an *objectively high likelihood* that its actions constituted infringement of a valid patent." *In re Seagate Tech.*, 497 F.3d 1360, 1371 (Fed. Cir. 2007) (en banc) (emphasis added). Likewise, under *Seagate's* subjective prong, the patent holder may recoup fees from an accused infringer who was "reckless" and "should have...known" of the objectively likely infringement, *id.*; while under *Brooks's* subjective prong, the accused infringer can only recoup fees if it shows that the patent holder "actually kn[e]w" that the accusation of infringement was baseless. *iLOR*, 631 F.3d at 1377.[6] These are not equal standards.

---

6. In *Highmark, Inc. v. Allcare Health Mgmt. Sys., Inc.*, 687 F.3d 1300 (Fed. Cir. 2012), *reh'g and reh'g en banc denied*, 701 F.3d 1351 (Fed Cir. 2012), *cert. granted*, 82 U.S.L.W. 3177 (U.S. Oct. 1, 2013) (No. 12-1163), the Federal Circuit altered the subjective prong articulating a recklessness standard analogous to *Seagate*, but this was *after* the instant case was decided.

While the Federal Circuit denies any disparity, the conflicting formulations above cannot be squared. High likelihood of infringement and reckless conduct are not congruent with objectively baseless and subjective bad faith. The Federal Circuit even requires, in the case of willful infringement, that district courts articulate reasons for *not* awarding fees to plaintiffs if those reasons are not apparent from the record. *See Modine Mfg. Co. v. Allen Group, Inc.*, 917 F.2d 538, 543 (Fed. Cir. 1990), as modified by *Wicker v. Standard Register Co.*, 82 F.3d 434 (Fed. Cir. 1996). Disparate standards produce disparate results—patent plaintiffs are far more likely to be granted fee awards than defendants. Writ Pet. at 25.

B. *Brooks* Contravenes Interpretations of the Lanham Act's Textually Identical Fee Statute.

It is well established that related provisions governing fee awards should be construed in harmony with one another. The fee-shifting provision of the Lanham Act is textually *identical* to the language of § 285. *See* 15 U.S.C. § 1117(a) ("The court in exceptional cases may award reasonable attorney fees to the prevailing party."). In enacting § 1117(a), Congress explicitly referenced § 285. *See* S. Rep. No. 93-1400, at 7133, 7135 (1974). But, the Federal Circuit's interpretation of § 285 is at odds with judicial interpretations of the identical words used in § 1117(a).[7] None requires satisfaction of *PRE*'s sham litigation test—both objective baselessness and subjective bad faith.

---

7. It also conflicts with this Court's interpretation of the similar Copyright Act fee shifting statute. 17 U.S.C. § 505, in *Fogerty*, *see supra* I.A.4.

Though the federal courts of appeals take multiple approaches to § 1117(a), the variances are minor, especially as compared to the *Brooks* rule. A plurality of circuits—the First, Third, Seventh, Eighth, and Ninth Circuits—permits district courts to consider the totality of the circumstances and expressly holds that subjective bad faith is not required.[8] The First Circuit explains that because "the purpose of the attorney's fees amendment to the Lanham Act was to provide for an award in exceptional cases in which equity called for an award in the sound discretion of the district judge," a "case-specific multi-factored analysis" is required, which does not require any showing of bad faith. *Tamko Roofing Prods. v. Ideal Roofing Co.*, 282 F.3d 23, 32-33 (1st Cir. 2002); *see also Securacomm Consulting, Inc. v. Securacom Inc.*, 224 F.3d 273, 280-81 (3d Cir. 2000) (rejecting a requirement of bad faith because "culpable conduct comes in a variety of forms and may vary depending on the circumstances of a particular case" and requires "consideration of the equities in full."); *Nightingale Home Healthcare, Inc. v. Anodyne Therapy, LLC*, 626 F.3d 958, 961, 965 (7th Cir. 2010) (holding that a prevailing defendant must show that the plaintiff's suit was "oppressive," which determination may be based solely on whether a claim is objectively reasonable).

---

8. Most courts assessing fees under the Lanham Act also do not (1) treat the relevant inquiry as a two-step process, wherein the courts have discretion only after exceptionality is determined; or (2) require proof of exceptionality by clear and convincing evidence. Moreover, no court of appeals has held that there is a presumption that a trademark infringement action was brought in good faith.

Similarly, the Eighth Circuit holds "[b]ad faith is not a prerequisite to a Lanham Act fee award," and district courts should assess the "character" of the plaintiff's case to determine whether it was "groundless, unreasonable, vexatious, *or* was pursued in bad faith." *Hartman v. Hallmark Cards, Inc.*, 833 F.2d 117, 123 (8th Cir. 1987) (emphasis added). The Eighth Circuit's approach thus permits an award of fees to a prevailing defendant based solely on the unreasonableness of the plaintiff's claims and positions. Similarly, in *Stephen W. Boney, Inc. v. Boney Servs., Inc.*, 127 F.3d 821, 827 (9th Cir. 1997), the Ninth Circuit held that the mere absence of bad faith did not render a party ineligible for attorney fees if "other exceptional circumstances may warrant a fee award," including whether the plaintiff's claims were "groundless, unreasonable, [or] vexatious." These circuits, therefore, view "unreasonable" as a circumstance both distinct from "groundless" and of sufficient weight to alone justify a fee award. Where a statute is designed to make mere partial restitution to a party, as opposed to a punitive award, it makes perfect sense to shift fees based solely on the maintenance of an unreasonable cause of action.

A smaller group of circuits—the Fourth, Sixth, Tenth, and D.C. Circuits—take a party-double-standard approach to the subjective bad faith requirement, but the disparity is the reverse of *Brooks*. Relying on legislative history, these circuits note that "in discussing fee awards to plaintiffs, [Senate Report No. 1400] speaks of acts characterized as 'malicious, fraudulent, deliberate and willful,'" yet "[n]otably absent in the discussion relating to fee awards to prevailing defendants is language suggesting a requirement of bad faith." *Scotch Whiskey Ass'n v. Majestic Distilling Co.*, 958 F.2d 594, 600 (4th Cir. 1992)

(*quoting* S. Rep. No. 93-1400 (2d Sess. 1974), *reprinted in* 1974 U.S.C.C.A.N. 7132, 7136-37). The Fourth Circuit reasons that a dual approach is proper because while "a prevailing plaintiff may receive, in addition to an award of attorney fees, compensatory damages, an accounting, and treble damages," a "prevailing defendant who has been wrongfully charged of falsely designating origin has only one source of restitution, recovery of attorney fees." *Id.* Thus, in stark contrast to the *Brooks* test, nearly all circuits reject a requirement of "bad faith" as a prerequisite for a fee award for prevailing *defendants* in trademark cases and some require it for plaintiffs.

Even those circuits that use a party-double-standard in trademark cases define "exceptional" in non-mandatory element terms; they permit flexible, open-ended inquiry into the totality of the circumstances. For example, the Fourth and D.C. Circuits require defendants to show "something less than bad faith." *Schwartz v. Rent-A-Wreck Am. Inc.*, 468 Fed.Appx. 238, 255 (4th Cir. 2012) ("We must determine, in light of the entire case, whether defendants' claims and assertions were so lacking in merit that the action as a whole was 'exceptional.'"); *Noxell*, 771 F.2d at 526 ("Congress did not intend rigidly to limit recovery of fees by a defendant to the rare case in which a court finds that the plaintiff 'acted in bad faith, vexatiously, wantonly, or for oppressive reasons'"); *see also Eagles, Ltd. v. Am. Eagle Found.*, 356 F.3d 724, 727-729 (6th Cir. 2004) (holding that an "exceptional" case was one that was "oppressive," and that a variety of factors may be considered); *King v. PA Consulting Group*, 485 F.3d 577, 592 (10th Cir. 2007) (listing factors to be considered, including a catch-all "for other reasons as well," and stating that "no one factor is dispositive").

The Second, Fifth, and Eleventh Circuits adopt the minority view, requiring a showing of "bad faith," but treating bad faith as a broad concept that encompasses the totality of the suit, rather than rigid satisfaction of anything akin to the subjective bad faith element of *PRE*'s "sham" litigation test. The Fifth Circuit, for example, affirmed the denial of fees where plaintiff's infringement contentions were not so "implausible" as to infer bad faith. *Scott Fetzer Co. v. House of Vacuums*, 381 F.3d 477, 490-91 (5th Cir. 2004); *see also Tire Kingdom, Inc. v. Morgan Tire & Auto, Inc.*, 253 F.3d 1332, 1336 (11th Cir. 2001); *Universal City Studios, Inc. v. Nintendo Co.*, 797 F.2d 70, 77 (2d Cir. 1986).

Thus, the majority of circuit courts of appeals guide district courts' equitable discretion in trademark cases according to a variety of non-restrictive factors. As aptly stated by the Third Circuit, "[b]y using the term 'equitable considerations,' we think it clear that Congress intended to invoke the tradition of equity, a hallmark of which is the ability to assess the totality of the circumstances in each case." *Securacomm*, 224 F.3d at 281. Examples of the factors considered by district courts include: "groundless arguments, failure to cite controlling law, and generally oppressive nature of the case," *Ji v. Bose Corp.*, 626 F.3d 116, 129 (1st Cir. 2010); the equities of visiting an award on a small business, whether the areas of law were unclear or there was a close legal question, or the extent of damages, *Tamko*, 282 F.3d at 32-33; economic coercion and the merits of the claims and assertions as a whole, *Schwartz*, 468 Fed.Appx. at 255; the foundation for the case, the extent of plaintiff's bad faith in bringing the suit, the unusually vexatious and oppressive manner in which it was prosecuted, or "perhaps for other reasons as well," *King*, 485 F.3d at 592.

The Federal Circuit's interpretation of § 285 cannot stand next to the consensus among circuit courts of appeals' interpretations of identical text in § 1117(a). The Lanham Act fee-shifting statute permits discretionary consideration of all relevant equitable circumstances in awarding fees. The same words cannot mean one thing in the trademark arena and another in the patent arena without specific statutory direction.

C. The Legislative History of Section 285 Confirms Congress's Intent to Confer Broad Discretion upon District Courts.

The legislative history of § 285, though sparse, also supports Octane's position. Prior to 1946, attorney's fees could not be recovered by a prevailing party in a patent action. *Philp v. Nock*, 84 U.S. (17 Wall.) 460 (1873); *Teese v. Huntingdon*, 64 U.S. (23 How.) 2, 8-9 (1859). In 1946, Congress enacted 35 U.S.C. § 70, adding a discretionary fee provision to other remedies available in a patent case: "The court may in its discretion award reasonable attorney's fees to the prevailing party upon the entry of judgment on any patent case."[9] The Senate Report that accompanied the 1946 version of the statute described Congress's understanding of a district court's authority to award fees in patent cases as follows:

> It is not contemplated that the recovery of attorney's fees will become an ordinary thing in patent suits, but the discretion given the court in this respect, in addition to the present discretion to award triple damages, will

9. This section was later re-codified at 35 U.S.C. § 285.

> discourage infringement of a patent by anyone thinking that all he would be required to pay if he loses the suit would be a royalty. The provision is also made general so as to enable the court to prevent a gross injustice to an alleged infringer.

S. Rep. No. 79-1503, at 2 (2d Sess. 1946), *reprinted in* 1946 U.S. Code Cong. Serv. 1386, 1387.

In 1952, Congress re-codified and amended § 285 to read as follows: "The court in exceptional cases may award reasonable attorney fees to the prevailing party." 35 U.S.C. § 258. As explained by Congress, this amendment was not intended to create a stricter standard for fee awards, but instead was intended to clarify and endorse the already-existing statutory standard:

> This section is substantially the same as corresponding provision in R.S. 4921, "in exceptional cases" has been added as expressing the intention of the present statute as shown by its legislative history and as interpreted by the courts.

S. Rep. No. 82-1979 (2d Sess. 1952), *reprinted in* 1952 U.S.C.C.A.N. 2394, 2423. Subsequent case law confirmed that the 1952 amendment was not meant to work a substantive change. *See, e.g., Rohm & Haas Co. v. Crystal Chem. Co.*, 736 F.2d 688, 691 (Fed.Cir.), *cert. denied*, 469 U.S. 851 (1984) ("Cases decided under § 285 have noted that the substitution of the phrase 'in exceptional cases' has not done away with the discretionary feature." (citations omitted)).

Between 1946 and 1952, there were several dozen lower court decisions interpreting and applying the former version of the statute, 35 U.S.C. § 70. These cases did not adopt a hard, specific test like the *Brooks* two-prong formula; rather, they treated the statute as granting the district courts discretion to consider a non-exhaustive and non-mandatory list of factors. One of the leading cases was *Park-In-Theatres, Inc. v. Perkins*, 190 F.2d 137, 142 (9th Cir. 1951):

> The *exercise of discretion* in favor of such an allowance should be bottomed upon a finding of *unfairness or bad faith in the conduct of the losing party, or some other equitable consideration of similar force, which makes it grossly unjust* that the winner of the particular law suit be left to bear the burden of his own counsel fees which prevailing litigants normally bear.

(emphases added) (citations omitted). In these cases, "gross injustice," and hence fairness, was the hallmark, and restrictive two-prong tests were wholly unknown. *See, e.g., Laufenberg v. Goldblatt Bros., Inc.*, 187 F.2d 823 (7th Cir. 1951); *Lincoln Elec. Co. v. Linde Air Prods. Co.*, 74 F.Supp. 293 (N.D. Ohio 1947).

These early cases also repeatedly emphasized that the statute conferred authority over fee awards to the sound discretion of the trial court. *See, e.g., Blanc v. Spartan Tool Co.*, 168 F.2d 296, 300 (7th Cir. 1948) (the district court's exercise of discretion "ends the matter"); *Orrison v. C. Hoffberger Co.*, 190 F.2d 787, 791 (4th Cir. 1951) (award of fees "lies in the sound discretion of the trial

court"); *Lincoln Elec.*, 74 F.Supp. at 294 ("discretionary power where it is necessary to prevent gross injustice"). Pre-1952 decisions were consistent as to discretion, but not in articulating the standard to channel discretion. Thus, they provide little guidance to what Congress intended by the phrase "as interpreted by the courts." Faced with similarly inconclusive history, this Court in *Fogerty* stated:

> Our review of the prior case law itself leads us to conclude that there was no settled "dual standard" interpretation of [the previous Copyright fee statute] about which Congress would have been aware.... This is hardly the sort of uniform construction that Congress might have endorsed.

510 U.S. at 532. *See also Kappos v. Hyatt*, 132 S. Ct. 1690, 1699 n.3 (2012) (cases before § 145 of Patent Act "too diverse' to support clear inference of Congress's intent); *Christiansburg*, 434 U.S. at 420 (same as to Title VII fee provision); *Noxell*, 771 F.3d at 526 (legislative history of Lanham Act fee provision not adequate to support requirement of subjective bad faith). This Court cautions against drawing definitive conclusions from such "sparse" legislative history. *Circuit City Stores v. Adams*, 532 U.S. 105, 120 (2001).

The only principle the cases and history confirm is intent to confer broad discretion to district courts. The 1946 Senate Report emphasized that the purpose of the statute was to confer "discretion" upon the district courts "to prevent a gross injustice to an alleged infringer." S. Rep. No. 79-1503, at 2 (2d Sess. 1946), *reprinted in* 1946

U.S. Code Cong. Serv. 1386, 1387. To this purpose, the provision was "made general," thus allowing district courts liberal discretion to identify "gross injustice to an alleged infringer." *Id.*

D. Decades of Prior Judicial Interpretation of § 285 Validates Use of Traditional Equitable Factors Rather than Strict Requirements.

Brooks also departed from decades of judicial interpretation of § 285, stretching from the statute's enactment to the creation of the Federal Circuit in 1982. The various circuits interpreted § 285 to permit a flexible inquiry into the merits of the claims, litigation misconduct, fraud before the Patent Office, and other circumstances evidencing unfairness, *or* bad faith. Some reasoned that the public has an interest in preventing abuse of patent monopolies, and that both accused infringers and the federal courts should be protected from "repetitive and burdensome assertion of patent claims." *Kearney & Trecker Corp. v. Giddings & Lewis, Inc.*, 452 F.2d 579, 597 (7th Cir. 1971); *Artvale, Inc. v. Rugby Fabrics Corp.*, 363 F.2d 1002, 1007 (2d Cir. 1966). The Third Circuit opined that Congress enacted § 285 to award fees "[w]here it has been thought that the cost of instituting a lawsuit is not a sufficient deterrent against vexatious or oppressive litigation." *Byram Concretanks, Inc. v. Warren Concrete Prods. Co. of N.J.*, 374 F.2d 649, 651 (3d Cir. 1967). Today, of course, that cost is *de minimus* for some patentees and hardly deters abusive patent litigation, whereas using the cost of defense to secure settlements to which plaintiffs are not entitled is a lure to bring such suits.

While the circuits articulated various standards for "exceptional" cases, ubiquitous was the use of flexible, open-ended inquiries that weighed the totality of circumstances, with some describing their analysis as such. *See, e.g.*, *True Temper Corp. v. CF&I Steel Corp.*, 601 F.2d 495, 509 (10th Cir. 1979) (reviewing the "totality of the evidence" to determine whether the misconduct was "so unfair and reckless as to make it unconscionable for the prevailing party to sustain the expense of counsel"); *Siebring v. Hansen*, 346 F.2d 474, 480 (8th Cir. 1965) (holding that fee awards should be "bottomed on a finding of unfairness *or* bad faith" and that the determination "*depends upon the facts and circumstances of each case*" (emphases added)).

Further, as with the Lanham Act, most circuits before 1982 considered bad faith to be merely one relevant factor among many, and not a prerequisite to a fee award. *See, e.g.*, *Skil Corp. v. Lucerne Prods. Inc.*, 503 F.2d 745, 750 (7th Cir. 1974) (rejecting a requirement of fraud or bad faith to make a case exceptional, instead inquiring into whether the conduct was "unreasonable, without legal justification and caused gross injustice"); *Gen. Instrument Corp. v. Hughes Aircraft Co.*, 399 F.2d 373, 381 (1st Cir. 1968) ("[l]eaving bad faith aside," and awarding prevailing defendant attorney fees when the evidence showed plaintiff committed an "exceptional oversight" and displayed serious "ineptitude").

Again, like interpretations of § 1117(a) of the Lanham Act, the circuits that did search for bad faith nevertheless evaluated the totality of the circumstances, even permitting "bad faith" to be *inferred* from the lack of objective merit of the claims and litigation arguments. *See, e.g.*, *Hughes*

Aircraft Co. v. Messerschmitt-Boelkow-Blohm, GmbH, 625 F.2d 580, 585 (5th Cir. 1980) (considering whether plaintiff's position was "arguable" enough to find bad faith); *Kahn v. Dynamics Corp. of Am.*, 508 F.2d 939, 945 (2d Cir. 1974) (plaintiff's "conduct [before the PTO] short of fraud and in excess of simple negligence", in addition to dilatory tactics and failure to address defendants' arguments of non-infringement, warranted fees). *Cf. Larchmont Eng'g, Inc. v. Toggenburg Ski Ctr.*, 444 F.2d 490, 491 (2d Cir. 1971) (insufficient showing of bad faith when plaintiff voluntarily dismissed its claims after discovery revealed their weaknesses).

Before the Federal Circuit existed, no appellate court used anything close to *PRE*'s "sham" litigation test in reviewing applications of § 285 to prevailing accused infringers. Before *Brooks*, even the Federal Circuit described the analysis more flexibly, using the word "or" rather than "and" to describe cases that could be deemed exceptional warranting fees, and listing exemplary factors rather than exclusionary elements. *See, e.g., Yamanouchi Pharm. Co. v. Danbury Pharm., Inc.*, 231 F.3d 1339, 1347 (Fed Cir. 2000) (in assessing exceptionality the "district court must look at the totality of the circumstances").

Pre-*Brooks* authority indicated a case was "exceptional" under § 285 if the district court determined that the totality of the circumstances made it exceptional. The courts were describing a traditional equitable inquiry, in which "[t]here [wa]s no precise rule or formula for making these determinations," and in which district courts were free to consider "several nonexclusive factors." *Fogerty*, 510 U.S. at 534 & n. 19. The Federal Circuit's stringent test, requiring both objectively baseless claims and subjective bad faith intent, is the antithesis of discretion and is nearly impossible to meet.

II. Defining "Exceptional" in § 285 According to an Equitable Discretion Test Best Serves the Policies and Purposes of Section 285 and the Patent Act.

Brooks does violence to the policies and purposes for which § 285 was adopted. Congress enacted the Patent Act, 35 U.S.C. § 1, *et seq.*, including § 285's fee-shifting provision, "[t]o promote the progress of...useful arts, by securing for limited times to...inventors the exclusive right to their...discoveries." U.S. Const. art. I, § 8, cl. 8. Patents promote progress and innovation, but as this Court has also noted, "too much patent protection can impede rather than 'promote the Progress of...useful Arts'." *Bilski v. Kappos*, 130 S. Ct. 3218, 3255 (2010). There is a "tension, ever present in patent law, between stimulating innovation by protecting inventors and impeding progress by granting patents when not justified by the statutory design." *Id.* at 3229. "It is as important to the public that competition should not be repressed by *worthless* patents as that the patentee of a really valuable invention should be protected in his monopoly." *Lear, Inc. v. Adkins*, 395 U.S. 653, 663-64 (1969) (emphasis added). The guiding principle of the Patent Act is to strike "a careful balance between the need to promote innovation and the recognition that imitation and refinement through imitation are both necessary to invention itself and the very lifeblood of a competitive economy." *Bonito Boats, Inc. v. Thunder Craft Boats, Inc.*, 489 U.S. 141, 146 (1989).

Equitable discretion in awarding fees is essential to strike the right balance "between stimulating innovation... and impeding progress." *Bilski*, 130 S. Ct. at 3229. This Court recognized the need for such flexibility by repeatedly stressing the importance of avoiding rigid formulations in other areas of patent law. In the context of adjudicating patent disputes, this Court stated that

"[h]elpful insights...need not become rigid and mandatory formulas." *KSR Int'l. Co. v. Teleflex Inc.*, 550 U.S. 398, 419 (2007) (rejecting "rigid approach" for obviousness determinations under § 103). Similarly, in rejecting the Federal Circuit's presumption of irreparable harm for injunctions, this Court observed that "traditional equitable principles do not permit such broad classifications." *eBay Inc. v. Mercexchange, LLC*, 547 U.S. 388, 393 (2006). The "obviousness analysis cannot be confined to a formalistic conception of the words teaching, suggestion and motivation," *KSR*, 550 U.S. at 419, and "traditional equitable principles do not permit" rigid classifications, *eBay*, 547 U.S. at 393. Likewise, what constitutes an "exceptional" case warranting fees cannot be rigidly defined. *See also Fogerty*, 510 U.S. at 534 ("equitable discretion should be exercised" in light of the purposes of the Copyright Act).

Only the equitable discretion test can serve the goal of balancing the rights of patentees to protect their monopolies and the rights of accused infringers to be free from defending against claims that unreasonably stretch the boundaries of patents. The equitable discretion test serves the purpose of patent law—it dis-incentivizes assertion of unreasonably weak patent claims and adds risk to patentees who assert patent infringement litigation as a business model for coercing undue settlements.

A. Eliminating Higher Fee Thresholds for Prevailing Accused Infringers Furthers the Goals of Patent Law.

The overall good of granting a monopoly to a patentee, encouragement of innovation and promoting disclosure, outweighs the anticompetitive effects of a time-limited

monopoly. But "'too much patent protection can impede rather than 'promote the Progress of...useful Arts'.'" *See Bilski*, 130 S. Ct. at 3255 (2010). For this reason, the ways in which a patentee may secure, utilize and leverage a patent are not without limit and are often carefully scrutinized. *See In re Ciprofloxacin Hydrochloride Antitrust Litig.*, 544 F.3d 1323, 1333 (Fed. Cir. 2008). A construction of § 285 that permits or even encourages patentees to unreasonably stretch patent infringement claims results in undermining, not furthering, the goals of patent law. That is what occurred here—Icon claimed, without risk, that Octane's dramatically different linkage infringed its valueless '710 linkage system. This amounts to over-reaching with its patent rights and results in anti-competitive effects.

In addition, by giving accused infringers an incentive to defend weak patent claims, holding out even the possibility of a fee award strengthens and bolsters the goals of patent protection. In *Fogerty*, this Court made the same observation with regard to copyright cases:

> [A] ***successful defense of a copyright infringement action may further the policies of the Copyright Act every bit as much as a successful prosecution*** of an infringement claim by the holder of a copyright.

Fogerty, 510 U.S. at 527 (emphasis added).

There is particular reason in patent cases to treat prevailing accused infringers and prevailing patentees fairly. A patentee can recover compensatory damages, treble damages and attorney fees, but an accused infringer can, at most, recoup reasonable attorney fees.

Setting the bar at objectively baseless or frivolous provides too much opportunity and incentive for plaintiffs to abuse the system. A fee award can never be a complete remedy, because it fails to compensate for the defendant's time or the competitive harm in the market caused by weak patent claims, but it can provide partial restitution. Subjective bad faith is not a pre-requisite to an award of reasonable attorney fees in most statutory schemes. *See, e.g.*, 17 U.S.C. § 505 (copyright); 42 U.S.C. § 1988 (civil rights actions); 42 U.S.C. § 3613 (fair housing actions); 15 U.S.C. § 1117(a) (trademark). Why should such a requirement be differentially imposed on patent defendants alone?

Legal scholars agree that fair application of § 285 would incentivize accused infringers to challenge bad patents, thereby protecting future accused infringers and the public from the anti-competitive effects of spurious lawsuits based on patents that should have never issued in the first place. *See, e.g.*, F. Scott Kieff, *The Case for Preferring Patent-Validity Litigation Over Second-Window Review and Gold-Plated Patents: When One Size Doesn't Fit All, How Could Two Do the Trick?*, 157 U. Pa. L. Rev. 1937, 1953 (2009) (fee shifting would help accused infringers of "junk patents" challenge validity, and would "align the parties' incentives to communicate with each other about the evidence that each has about the weaknesses in the other's case").

B. More, Not Less, Discretion May Curb the Burgeoning Problem of Abusive Patent Litigation.

According to a survey published in 2011 by the American Intellectual Property Law Association

("AIPLA"), the median cost for a patent litigation in which the amount in controversy is from $1-25 million, through just the *end of discovery*, is $2.5 million. C.A. App. A2649. Some large companies know this, and, unfortunately, use patent litigation as a weapon against competitors, especially smaller competitors. Many smaller competitors do not have the financial resources or wherewithal to defend a patent infringement case, no matter how unreasonable the contentions. *See* Michael J. Meurer, *Controlling Opportunistic and Anti-Competitive Intellectual Property Litigation*, 44 B.C. L. Rev. 509, 512 (2003) (weak patent cases are either (1) "anti-competitive lawsuit[s] seeking to impair the defendant's performance in their shared market or even to exclude the defendant from the market completely"; or (2) "opportunistic lawsuit[s] seeking a settlement payment"). This Court, in *Bilski*, recognized the harm that results, as follows: "[P]atent holders may be able to...threaten litigation and to *bully* competitors, especially those that cannot bear the costs of a drawn out, fact-intensive patent litigation. That can take a particular toll on small and upstart businesses." *Bilski*, 130 S. Ct. at 3256-57 (Stevens, J. concurring) (emphasis added).

Worse yet, there is almost no efficient way for an accused infringer to extract itself from unreasonably weak patent litigation. Patent infringement actions are rarely dismissed at the pleading stage. Often, before a defendant accused of infringement has any hope of extricating itself from litigation, substantial discovery (both fact and expert), *Markman* briefing and hearing, and summary judgment briefing and hearing, must occur. Here, that process took two years.

District courts are also burdened by meritless patent litigation. District court judges—who, in many instances, have no technical background and modest familiarity with the patent system—are often faced with complex technology, difficult-to-read patent language and a body of case law that is both robust and nuanced. No matter how preposterous the merits of the infringement case, to reach a resolution on the merits, the district court must expend significant scarce resources to decipher the claim scope and its impact on the merits. *See Eon-Net LP v. Flagstar Bancorp.*, 653 F.3d 1314, 1327 (Fed. Cir. 2011) (even meritless cases "require the district court to engage in excessive claim construction analysis before it is able to see the lack of merit of the patentee's infringement allegations"). This very case illustrates this problem as it took years of litigation before the district court had the information that it needed to realize what was always true—Icon's claims were so weak they did not warrant a trial. For these reasons, no matter how unreasonable the patentee's contentions, it will be a rare district court judge who will be motivated to call a patentee's claims "baseless" or "frivolous." To do so would be understandably counterintuitive, especially when heading to an appellate court that routinely reverses district courts on fee awards as well as ordinary merits-based rulings.

This is reflected in case outcomes. In the last twenty years, the Federal Circuit almost never reversed the lower court's *denial* of fees under § 285 to a prevailing *accused infringer*. It has never done so on the grounds that the district court *erred* in determining the case was not objectively baseless and/or brought in subjective bad faith.

On the other hand, trial courts finding the matter exceptional and awarding fees to prevailing accused infringers are few and far between, and reversals of such fee awards by the Federal Circuit notably common *See, e.g., Checkpoint Sys., Inc. v. All-Tag Security S.A.*, 711 F.3d 1341 (Fed. Cir. 2013) (reversing fee award to prevailing accused infringer following a jury verdict of non-infringement, invalidity *and* unenforceability); *iLOR*, 631 F.3d at 1376-78 (reversing finding of exceptionality and award of fees to prevailing accused infringer); *Medtronic Navigation, Inc. v. BrainLAB Medizinische Computersysteme GmbH*, 603 F.3d 943, 966 (Fed. Cir. 2010) (same); *DePuy Spine, Inc. v. Medtronic Sofamor Danek, Inc.*, 567 F.3d 1314, 1337–39 (Fed. Cir. 2009) (same); *FieldTurf Int'l, Inc. v. Sprinturf, Inc.*, 433 F.3d 1366, 1373 (Fed. Cir. 2006) (same); *Brooks*, 393 F.3d at 1381 (same); *Forest Labs.*, 339 F.3d at 1327-28 (same). Against this backdrop, it is not surprising district courts are reluctant to award fees.

Excluding cases involving patent procurement fraud, the few cases that affirmed a fee award since *Brooks* generally found some other misconduct which independently violated Rule 11, in addition to objective baselessness and subjective bad faith. *See* Fed. R. Civ. P. 11. For example, in *Eon-Net*, in addition to baseless litigation brought in subjective bad faith, the patentee engaged in Rule 11 misconduct, and the fee award was based on both § 285 and Rule 11. 653 F.3d at 1324. *See also MarcTec, LLC v. Johnson & Johnson*, 664 F.3d 907, 917-22 (Fed. Cir. 2012). Therein lies the problem. Fee awards in patent cases under § 285 essentially require a Rule 11 showing. Indeed, since *Brooks*, the Federal Circuit has affirmed a fee award premised solely on "sham

litigation" in only two cases, both decided *after* the case at bar. In *Highmark*, 687 F.3d at 1300, the Federal Circuit affirmed an award in part. *See also Taurus IP, LLC v. DaimlerChrysler Corp.*, 726 F.3d 1306, 1327 (Fed. Cir. 2013) (sham test satisfied).

In short, the Federal Circuit's current interpretation of § 285 does not provide the appropriate level of deterrence to patent litigation abuse nor does it incentivize accused infringers to contest inappropriately weak patent infringement allegations. Congress enacted a broad grant of discretion to the district courts to curb abusive patent litigation by granting fee awards in the interest of justice. The Federal Circuit has all but abolished this discretion. Adoption of the equitable discretion test re-balances patent litigation as Congress intended.

III. This Court Should Hold That Section 285 Requires District Courts to Exercise Discretion in Determining Fee Awards by Applying Traditional Equitable Factors, Guided by the Purposes of Patent Law, to Protect Legitimate Patent Rights in Reasonable Ways.

The *Brooks* test is erroneous and should be rejected. This Court should adopt the equitable discretion test.

Requiring an objectively "baseless" or "sham" suit is a non-starter. Rare is the patent attorney who cannot craft *some* facially rational arguments and pay experts, as here, to support those arguments. This is especially true, because most cases involve directly related technologies where similarities at some level exist. Similarly, proving bad faith by clear and convincing evidence

is an insurmountable burden.[10] A patentee asserting unreasonably weak claims, but falling short of Rule 11 violations, should not be exempt from potentially paying the prevailing accused infringer's fees. The injustice that Congress intended to prevent occurs short of such extreme boundaries. District court judges are loath to hold that a lawyer violated Rule 11, filed a frivolous case, or acted in "bad faith." This Court should hold that a prevailing defendant need not prove the plaintiff pursued meritless, frivolous or objectively baseless claims, nor that the plaintiff acted in bad faith, to qualify for a fee award under § 285. In assessing whether a case is "exceptional," this Court should require district courts to exercise discretion by considering traditional equitable factors, guided by the purposes of patent law. A fee award is appropriate here, because viewing the circumstances as a whole through the prism of traditional equity demonstrates that Icon was not protecting legitimate patent rights in reasonable ways.

Section 285 is not restrictive. Instead, it enables district courts, in their discretion, to award fees in "exceptional" cases. The Federal Circuit's rigid, formulaic definition of "exceptional" should not be replaced with another equally inflexible judicial creation. Such an approach would neither effectuate the general, commonly understood language of the statute, nor comport with traditional equitable principles. Each patent case is uniquely complex. Flexibility is needed so district courts can evaluate the circumstances of each case and award

---

10. Here, even rare email communications drafted by a high level executive and evidencing a motive inconsistent with asserting legitimate patent interests were not enough. J.A. 274a, 391a; SA-72.

fees in exceptional cases as equity directs. *See, e.g.*, *Tamko*, 282 F.3d at 32 (holding a "case-specific multi-factored analysis" should be applied to award fees under the Lanham Act's textually identical language). This asks of district courts nothing different than what they do every day in other areas of the law.

Guiding the determination should be the goals of the Patent Act, and the role of patent litigation in accomplishing those goals. *See* Section II, *supra*. The law expects patentees to resort to the courts to protect legitimate patent interests in reasonable ways. Section 271 of the Patent Act, in fact, guarantees patentees a remedy "by civil action" for infringement of patents. 35 U.S.C. § 271. But this remedy cannot be divorced from the substantive rights it is meant to protect. Patent protection embodies a "carefully crafted bargain" in which the inventor, in a patent, discloses "new, useful, and nonobvious advances in technology and design in return for the exclusive right to practice the invention for a period of years." *Bonito Boats*, 489 U.S. at 150-51. If patent litigation is used, not to protect a legitimate patent interest, but to assert unreasonably weak patent claims as a tool to obtain money to which a patentee is not entitled, district courts must have the discretion provided by § 285 to award fees.

The circumstances of this case, particularly the very low likelihood of Icon's success, are illustrative. Viewed through well-recognized principles of equity, Icon is a patentee who was not protecting legitimate patent interests in reasonable ways. Typically, the holder of a valuable patent brings to market, or licenses others to bring to market, a new technology or innovation; a

competitor recognizes the advantages and closely copies it or designs around it; litigation ensues. Patent litigation is meant for such normative circumstances.

That is not what occurred here. Icon developed a linkage technology that was unique but never commercially viable. J.A. 100a-108a; 117a. Rather than practice the '710 technology, Icon abandoned the patent to a "shelf." *Id.*; J.A. 274a. There is not a shred of evidence that it had any value. Octane did not copy Icon's patent in any way, because there was never a commercial product to copy and the technology did not work. Instead, Octane licensed visibly and dramatically different patented technology, some of which *pre-dated* the '710 patent. J.A. 109a-113a; SA-53-SA-71. Octane then made and sold award-winning elliptical machines. Octane's success cut into Icon's market share. Adding to the exceptional nature of this case, Icon noticed Octane's success and used the worthless '710 patent to hit Octane with an exceptionally weak, but expensive to overcome, infringement lawsuit. It attempted to reap where it did not sow, epitomizing what is wrong with a restrictive interpretation of § 285—it incentivizes such conduct.

While there might be reasonable debate about whether Icon's claims had *zero* merit, i.e., frivolous (Octane believes that is the case), there can be no reasonable debate that its claims were extremely weak. Visually and technologically, *see* Statement of the Case, *supra*, Octane's machines lacked *multiple* elements, including (1) a stroke rail, (2) the parts needed to produce linear reciprocating motion (the c-channel and related linkage), *and* (3) linear reciprocating motion by *any* means, all of which comprised the patentable aspects of Icon's '710

patent. Pet. App. 48a-61a; J.A. 123a. Octane's linkage was not using any inventive concept of the '710 patent and Icon's disavowal of the reasons the '710 patent issued and its use of abstract word games could not make it otherwise. For these reasons, both the district court and the Federal Circuit had *no difficulty* awarding and affirming summary judgment of non-infringement, both literal and under the doctrine of equivalents. Pet. App. 31a-61a; 1a-17a. And even if Icon had won the linguistic contests, it would have still failed—its claims would have been so broad as to render the patent invalid.[11]

Patent law does not require checking common sense at the courthouse steps. It is axiomatic that infringement must be judged against the claims of the patent, but claims cannot encompass what was not invented and disclosed in the patent. 35 U.S.C. § 112. Here, what was disclosed in the patent—the bargained for basis of a patent monopoly—was nothing like Octane's linkage technology. Therefore, Icon resorted to a series of outlandish contentions regarding the *scope* of its claims. J.A. 81a-90a.

For example, Icon asserted that "linear reciprocating displacement" did not require straight line movement on the theory that a straight line can always be drawn between two points, no matter the shape of movement between two points. J.A. 93a-98a; SA-49-SA-52. Icon also took the position that arcuate motion is equivalent to "linear" motion, even though the '710 patent showed the

---

11. Oddly, the district court and the Federal Circuit limited the fee issue to the strength of each discrete contention on which Icon lost. Under the equitable discretion test, a district court should also be able to consider the likelihood of *ultimate* success.

top of the stroke rail moving in a straight line and would not work otherwise. J.A. 215a-223a. Both the district court and Federal Circuit summarily rejected the argument, because it required reading "linear" out of the claim. Pet. App. 49a-53a; 6a-17a. The equitable discretion test would permit the district court to call this what it is—attempting to stretch the bounds of the '710 patent monopoly in ways that render its claim limitations meaningless. If a straight line is a curved line, there is no point to patent claims.

Because Octane's linkage indisputably lacked a c-channel, Icon also argued that a c-channel was not required by its patent, Pet. App. 75a-76a; J.A. 223a-228a; C.A. App. A1050-A1056, even though its patent disclosed no other structure to constrain the top of the stroke rail to linear movement and its expert admitted the disclosed structure was necessary to performing the recited function. C.A. App. A1257-A1258. Icon attempted to overcome this hurdle by arguing that the mention of the c-channel in the specification as the "attaching means" ruled out its inclusion in the Claim 1(d) "means for connecting." Pet. App. 10a. The Federal Circuit characterized this argument as "without merit," in light of the patent disclosures and well-established law. *Id.* Again such linguistic deconstructions depart from protecting legitimate patent interests in reasonable ways. They represent *circumventing* the invention that the '710 patent actually disclosed. Camouflaging such tactics as inherent in the "complexity" of patent law defies common sense. Permitting district courts to define "exceptional" in § 285 according to the equitable discretion test would both discourage and remedy such abuse.

The equitable discretion test also would have permitted the district court to consider the exceptionality of a key fact—by not practicing the '710 technology for nearly 10 years before suing Octane, Icon had little to risk in the absence of a meaningful risk of a fee award. Non-practicing entities are "generally immune to counterclaims for patent infringement, antitrust, or unfair competition because [they do] not engage in activities." *Eon-Net*, 653 F.3d at 1327-28. Thus, Icon risked nothing to subject its smaller competitor, Octane, to exorbitant litigation costs, even if the '710 patent were found invalid. Patent litigation abuse is on the rise, because the absence of risk, including the risk of a fee award, incentivizes the assertion of unreasonable claims and discourages defendants from litigating such claims to victory. These realities do violence to the goals of patent protection. The equitable discretion test would strengthen the patent system by making it fair.

Icon repeatedly told the lower courts that the fact that it did not practice the '710 technology was irrelevant, because every patent grants the right to exclude others. This misses the point. It is unreasonable to assert that Octane's successful elliptical machines, licensed under a different patent disclosing a different linkage system, infringed technology that did not work and had no value. The fact that Icon's patented technology did not work, had no value and was shelved begs the question—why did Icon go to the trouble to sue? The e-mails were direct evidence revealing that the lawsuit was using the huge cost of patent litigation as a weapon to obtain royalties to which it was not entitled and/or weaken a competitor who was cutting into Icon's elliptical market share. The equitable discretion test allows consideration of these circumstances to the inevitable conclusion that Icon was not protecting legitimate patent interests in reasonable ways.

On top of this, Icon (1) initiated suit in an inconvenient forum by joining an Octane customer; (2) asserted a second patent, the asserted scope of which even the Eastern District of Texas rejected; (3) took broad discovery regarding *every* Octane product; (4) forestalled the district court's review of Octane's summary judgment motion; (5) recast arguments to effectively reargue rejected claim construction positions; and (6) represented that before suit it secured opinions from experts and counsel that the Q47 machine infringed its patent, without ever disclosing those opinions or even providing declaratory support. Documents that *were* produced included e-mail communications sent by the V.P. of Sales of Icon's Free Motion division. J.A. 274a, 391a; SA-72. That division competed with Octane and the e-mails attest to the fact that this suit was premised on a "shelf" patent, i.e., one not being commercialized, and represented "*throwing a lawsuit on top*" of a campaign against Octane. J.A. 274a; SA-72. The brazen tone of the emails is unmistakable.

The district court here assessed Octane's fee motion through the restrictive lens of the nearly impossible-to-satisfy "sham" litigation test. In effect, the district court held Octane to a "frivolous" standard. For example, the district court described Icon's individual claim construction arguments as "not objectively baseless" and not "frivolous." As to the size disparity and indicia of competitive motivation evidence, the district court, quoting *Brooks*, stated "[a] duly granted patent is a grant of the right to exclude all infringers, not just those of comparable size." Pet. App. 27a. According to the district court, the emails constituted "stray remarks," but "[e]ven if the emails suggest Icon commenced this lawsuit to gain a competitive advantage against a smaller company, that

fact does not make the lawsuit frivolous." *Id.* "Neither is it relevant", according to the district court, "that Icon never commercialized the '710 patent. Simply bringing suit to gain a competitive advantage is not evidence of bad faith." *Id.* at 27a-28a. The equitable discretion test would have permitted the district to evaluate this evidence according to traditional equitable principles guided by the purposes of patent law and hold that this case *was* exceptional and fairness dictated fee shifting.

The outcome in this case exemplifies the injustice that burdens patent litigation and that has received considerable national attention. Section 285 should be interpreted to provide defendants, like Octane, with partial[12] restitution. The benefit to the patent system and the public is discouraging a much larger competitor, like Icon, from asserting a valueless patent against a much smaller competitor in an effort to use the high cost of patent litigation to get royalties to which it was not entitled. Had there been any evidence that Octane used Icon's patented technology in some way, the result could be different. But, no evidence to this effect exists.

The *Brooks* test, coupled with the high mortality rate of fee awards to prevailing defendants in the Federal Circuit, prevented the district court from applying equitable considerations or probing deeper. The result was predictable and Icon knew this when it instituted suit. Viewed through well-recognized principles of equity, however, the facts indicate a patentee that was *not* protecting legitimate patent rights in a reasonable manner. This case fits the ordinary meaning of "exceptional" and a

12. An award of fees can never fully compensate Octane for what it has lost.

fee award promotes the purposes of the Patent Act without unnecessarily discouraging patentees who would assert legitimate patent interests in reasonable ways. Patentees that invent, patent, and successfully bring technology to market will not be dis-incentivized in the least from bringing patent litigation against competitors that too closely copy their patented technology.

In *Daubert v. Merrell Dow Pharmaceuticals, Inc.*, 509 U.S. 579, 596-97 (1993), this Court viewed district courts as "gatekeepers" of admissible scientific evidence. Section 285's grant of discretion is broad enough to permit a similar role for courts in identifying exceptional patent cases warranting fees. This case illustrates factors a court should consider in performing a gatekeeping role to dis-incentivize assertion of unreasonably stretched claims based on valueless patents. Other factors not present here but which might be relevant in other cases include, but are not limited to: (1) whether the case turned on an unsettled area of the law; (2) the closeness of the question whether a "design-around" infringed; (3) whether prior art invalidated a patent; (4) whether economic disparity counsels *against* fee shifting, or militates towards only partial fee shifting; (5) unreasonable procedural conduct[13]; and (6) whether the plaintiff engages in a pattern or practice of abusive patent litigation against others.[14] Regardless of the factors present in a case, there is no reason to believe that using traditional principles of equity and fairness to measure exceptional against

---

13. There is evidence of this here. *See* Statement of Case, *supra*.

14. On this last factor, at a hearing on remand, Octane would offer evidence that Icon engages in such a pattern or practice.

the norm—legitimate patent interests being asserted in reasonable ways as intended by the patent law—will produce anything other than the just results intended by Congress in passing § 285.

Here, the bottom line is that anyone with a minimal understanding of patent law looking at the claims and disclosure of the '710 patent would recognize that Octane's linkage is not related to or covered by the '710 patent. The patent infringement claims were so ridiculous as to alone warrant fees, but certainly the broader context shows this was not a patentee protecting legitimate patent interests in reasonable ways. Under the appropriate equitable discretion test, a *denial* of fees to Octane would have been an abuse of discretion.

Therefore, this Court should not only reverse the judgment below, but enter an order awarding fees to Octane and remanding to the district court for a determination of the amount. Normally, these decisions should be made first by district courts, but on the undisputed record here a fee award is appropriate. All patent appeals are heard by a single court that has a record of strongly discouraging fee awards to prevailing accused infringers. This Court is uniquely qualified to provide needed guidance to lower courts regarding § 285.

Alternatively, this Court should enter an opinion clarifying that the equitable discretion test is the appropriate tool to define exceptional in § 285, providing guidance to the district court on consideration of relevant factors, and remanding to the district court for further proceedings consistent therewith.

CONCLUSION

For the foregoing reasons, Octane Fitness, LLC respectfully requests that the Court REVERSE and enter an ORDER granting fees to Octane and REMAND for a determination of the amount or, in the alternative, REMAND to the District Court for consideration of Octane's entitlement to a fee award using traditional equitable factors and guided by the purposes of patent law to protect legitimate patent rights in reasonable ways.

Dated: December 2, 2013

Respectfully submitted,

RUDOLPH A. TELSCHER, JR.,
Counsel of Record
KARA R. FUSSNER
STEVEN E. HOLTSHOUSER
DAISY MANNING
HARNESS, DICKEY & PIERCE, PLC
7700 Bonhomme Avenue, Suite 400
St. Louis, MO 63105
(314) 726-7500
rtelscher@hdp.com

Attorneys for Petitioner

RESPONDENT'S BRIEF

No. 12-1184

IN THE

Supreme Court of the United States

OCTANE FITNESS, LLC,

Petitioner,

v.

ICON HEALTH & FITNESS, INC.,

Respondent.

On Writ of Certiorari to the United States Court of Appeals for the Federal Circuit

BRIEF OF RESPONDENT

CARTER G. PHILLIPS
RYAN C. MORRIS
SIDLEY AUSTIN LLP
1501 K Street, NW
Washington, DC 20005
(202) 736-8000
cphillips@sidley.com

CONSTANTINE L. TRELA, JR.
Sidley Austin LLP
One South Dearborn St.
Chicago, IL 60603
(612) 853-7000
ctrela@sidley.com

LARRY R. LAYCOCK *
DAVID R. WRIGHT
JARED J. BRAITHWAITE
MASCHOFF BRENNAN
LAYCOCK GILMORE
ISRAELSEN & WRIGHT
201 S. Main Street
Suite 600
Salt Lake City, UT
84111
(435) 252-1360
llaycock@mabr.com

Counsel for ICON Health & Fitness, Inc.

* Counsel of Record

January 17, 2014

WILSON-EPES PRINTING CO., INC. – (202) 789-0096 – WASHINGTON, D. C. 20002

QUESTION PRESENTED

The district court resolved ICON Health & Fitness, Inc.'s patent infringement claims against industry competitor Octane Fitness, LLC, on summary judgment. Octane sought an award of attorney fees under 35 U.S.C. § 285. The district court applied the settled standard under § 285 and found that this was not an "exceptional case" that warrants an award of attorney fees. The Federal Circuit agreed. The question presented is:

Whether this Court should reject the settled standard applied in this case and expand the scope of fee-shifting under § 285 so that virtually any patent infringement case will qualify as an "exceptional case."

PARTIES TO THE PROCEEDING AND CORPORATE DISCLOSURE STATEMENT

Respondent and plaintiff-below is ICON Health & Fitness, Inc. HF Holdings, Inc. is the parent corporation of ICON. Credit Suisse Group, a publicly held corporation, owns 10% or more of the stock of ICON.

Petitioner is Octane Fitness, LLC.

TABLE OF CONTENTS

	Page
QUESTION PRESENTED	i
PARTIES TO THE PROCEEDING AND CORPORATE DISCLOSURE STATEMENT	ii
TABLE OF AUTHORITIES	vi
INTRODUCTION	1
COUNTERSTATEMENT OF THE CASE	3
A. Statutory Background	3
B. Factual Background	6
1. The '710 Patent	7
2. ICON's Lawsuit Against Octane	8
3. Claim Construction and Summary Judgment	11
4. Octane's Motion for Attorney Fees	13
C. The Federal Circuit Appeal	14
SUMMARY OF THE ARGUMENT	15
ARGUMENT	17
I. THE LOWER COURTS APPLIED THE CORRECT STANDARD TO DETERMINE THAT THIS IS NOT AN EXCEPTIONAL CASE UNDER § 285	17
A. Section 285's "Exceptional Case" Language Incorporates The Prior Judicial Standards	17
B. The Federal Circuit's Exceptional Case Standard Appropriately Follows Prior Judicial Standards	18

TABLE OF CONTENTS—continued

Page

C. The *Brooks* Court Properly Relied On *PRE* 21

D. The Arguments Presented By Octane And Its *Amici* Are Without Merit 23

1. Octane's Arguments are Premised on the Fiction that an Exceptional Case Finding Always Requires Objective Baselessness and Bad Faith 23

2. Octane's Interpretation of § 285 Renders the Phrase "In Exceptional Cases" Superfluous and Directly Contravenes Congressional Intent 24

3. In the Absence of Specific Misconduct, Objective Baselessness is a Necessary Requirement for a Case to be Exceptional 28

4. Although Fees may be Awarded Based on Other Exceptions to the American Rule, § 285 has Independent Effect 29

5. Application of § 285 is Party Neutral .. 32

II. OTHER INTELLECTUAL PROPERTY FEE-SHIFTING STATUTES DO NOT JUSTIFY OCTANE'S PROPOSED EXPANSION OF § 285 34

A. The Copyright Act's Fee-Shifting Provision Is Distinguishable From § 285 34

B. Cases Interpreting The Lanham Act's Fee-Shifting Provision Do Not Dictate The Meaning Of § 285 36

TABLE OF CONTENTS—continued

Page

III. THE CURRENT DEBATE REGARDING "PATENT TROLLS" CANNOT AFFECT THE PROPER INTERPRETATION OF § 285 39

IV. THE APPLICABLE STANDARD OF PROOF IS NOT PROPERLY BEFORE THE COURT 41

V. THE LOWER COURTS PROPERLY CONCLUDED THAT THIS IS NOT AN EXCEPTIONAL CASE THAT COULD QUALIFY FOR AN AWARD OF ATTORNEY FEES 43

CONCLUSION 46

TABLE OF AUTHORITIES

CASES Page

Ali v. *Fed. Bureau of Prisons*, 552 U.S. 214 (2008) 40
Am. Chain & Cable Co. v. *Rochester Ropes, Inc.*, 199 F.2d 325 (4th Cir. 1952) ..... *passim*
Bard Peripheral Vascular, Inc. v. *W.L. Gore & Assocs., Inc.*, 682 F.3d 1003 (Fed. Cir. 2012), *cert. denied*, 133 S. Ct. 932 (2013) 33, 34, 43
Barnhart v. *Sigmon Coal Co.*, 534 U.S. 438 (2002) 40
Bd. of Supervisors for La. State Univ. Agric. & Mech. Coll. v. *Smack Apparel Co.*, 550 F.3d 465 (5th Cir. 2008) 42
BE & K Constr. Co. v. *NLRB*, 536 U.S. 516 (2002) 20, 22
Brooks Furniture Mfg., Inc. v. *Dutailier Int'l, Inc.*, 393 F.3d 1378 (Fed. Cir. 2005) ..... *passim*
Burger King Corp. v. *Pilgrim's Pride Corp.*, 15 F.3d 166 (11th Cir. 1994) 37
Chambers v. *NASCO, Inc.*, 501 U.S. 32 (1991) 23, 31
Cheminor Drugs, Ltd. v. *Ethyl Corp.*, 168 F.3d 119 (3d Cir. 1999) 20
Corley v. *United States*, 556 U.S. 303 (2009) 25
Day v. *Woodworth*, 54 U.S. (13 How.) 363 (1851) 3
Dubil v. *Rayford Camp & Co.*, 184 F.2d 899 (9th Cir. 1950) 4, 18
E-Pass Techs., Inc. v. *3Com Corp.*, 559 F.3d 1374 (Fed. Cir. 2009) 24
E. R.R. Presidents Conference v. *Noerr Motor Freight, Inc.*, 365 U.S. 127 (1961) 22, 27

TABLE OF AUTHORITIES—continued

Page

Eastway Constr. Corp. v. *City of N.Y.*, 762 F.2d 243 (2d Cir. 1985), *superseded on other grounds by* Fed. R. Civ. P. 11, *as recognized in Ipcon Collections LLC* v. *Costco Wholesale Corp.*, 698 F.3d 58 (2d Cir. 2012) 30

eBay Inc. v. *MercExchange, LLC*, 547 U.S. 388 (2006) 25

Eisemann v. *Greene*, 204 F.3d 393 (2d Cir. 2000) 43

Eltech Sys. Corp. v. *PPG Indus., Inc.*, 903 F.2d 805 (Fed. Cir. 1990) 32, 33

Eon-Net LP v. *Flagstar Bancorp*, 653 F.3d 1314 (Fed. Cir. 2011), *cert denied sub nom.* 132 S. Ct. 2391 (2012) 41

Fin. Inv. (Bermuda) Ltd. v. *Geberit AG*, 165 F.3d 526 (7th Cir. 1998) 42

Fla. Dep't of Revenue v. *Piccadilly Cafeterias, Inc.*, 554 U.S. 33 (2008) 40

Fogerty v. *Fantasy, Inc.*, 510 U.S. 517 (1994) 3, 24, 35

Friesing v. *Vandergrift*, 126 F.R.D. 527 (S.D. Tex. 1989) 30

Gen. Instrument Corp. v. *Hughes Aircraft Co.*, 399 F.2d 373 (1st Cir. 1968) 26

Hughes Aircraft Co. v. *Messerschmitt-Boelkow-Blohm, GmbH*, 625 F.2d 580 (5th Cir. 1980) 26

IGEN Int'l, Inc. v. *Roche Diagnostics GmbH*, 335 F.3d 303 (4th Cir. 2003) 20

iLOR, LLC v. *Google, Inc.*, 631 F.3d 1372 (Fed. Cir. 2011) 33

Kahn v. *Dynamics Corp of Am.*, 508 F.2d 939 (2d Cir. 1974) 26

TABLE OF AUTHORITIES—continued

Page

Kearney & Trecker Corp. v. *Giddings & Lewis, Inc.*, 452 F.2d 579 (7th Cir. 1971) .. 26

Kilopass Tech., Inc. v. *Sidense Corp.*, __ F.3d __, 2013 WL 6800885 (Fed. Cir. Dec. 26, 2013) 22, 32, 39, 44

Kirk Capital Corp. v. *Bailey*, 16 F.3d 1485 (8th Cir. 1994) 30

La Maur, Inc. v. *DeMert & Dougherty, Inc.*, 265 F. Supp. 961 (N.D. Ill. 1965), *aff'd*, 1966 WL 7671 (7th Cir. Oct. 3, 1966)..... 42

Laufenberg, Inc. v. *Goldblatt Bros.*, 187 F.2d 823 (7th Cir. 1951)..... 4, 18, 26, 38

Lipscher v. *LRP Publ'ns, Inc.*, 266 F.3d 1305 (11th Cir. 2001) 39

Livesay Window Co. v. *Licesay Indus., Inc.*, 251 F.2d 469 (5th Cir. 1958)..... 6, 21

MarcTec, LLC v. *Johnson & Johnson*, 664 F.3d 907 (Fed. Cir. 2012) 31

Markman v. *Westview Instruments, Inc.*, 52 F.3d 967 (Fed. Cir. 1995), *aff'd*, 517 U.S. 370 (1996) 12

Monolith Portland Midwest Co. v. *Kaiser Aluminum & Chem. Corp.*, 407 F.2d 288 (9th Cir. 1969) 5, 17

Monolithic Power Sys., Inc. v. *O2 Micro Int'l Ltd.*, 726 F.3d 1359 (Fed. Cir. 2013) 23, 24

Moore v. *W. Sur. Co.*, 140 F.R.D. 340 (N.D. Miss. 1991), *aff'd*, 977 F.2d 578 (5th Cir. 1992) 30

Namet v. *United States*, 373 U.S. 179 (1963) 42

TABLE OF AUTHORITIES—continued

Page

Nightingale Home Healthcare, Inc. v. *Anodyne Therapy, LLC*, 626 F.3d 958 (7th Cir. 2010) 36
Noxell Corp. v. *Firehouse No. 1 Bar-B-Que Rest.*, 771 F.2d 521 (D.C. Cir. 1985) 38, 39
Old Reliable Wholesale, Inc. v. *Cornell Corp.*, 635 F.3d 539 (Fed. Cir. 2011) 24
Park-in-Theatres v. *Perkins*, 190 F.2d 137 (9th Cir. 1951) 4, 5, 20, 40
Parks v. *Booth*, 102 U.S. 96 (1880) 3
Patsy's Brand, Inc. v. *I.O.B. Realty, Inc.*, 317 F.3d 209 (2d Cir. 2003) 39
Philip v. *Nock*, 84 U.S. (17 Wall.) 460 (1873) 3
Phillips Petroleum Co. v. *Esso Standard Oil Co.*, 91 F. Supp. 215 (D. Md.), *aff'd*, 185 F.2d 672 (4th Cir. 1950) 4, 40, 42
Procter & Gamble Co. v. *Amway Corp.*, 280 F.3d 519 (5th Cir. 2002) 39
Prof'l Real Estate Investors v. *Columbia Pictures Indus.*, 508 U.S. 49 (1993) 2, 19, 20
Purer & Co. v. *Aktiebolaget Addo*, 410 F.2d 871 (9th Cir. 1969) 5
Q-Panel Co. v. *Newfield*, 482 F.2d 210 (10th Cir. 1973) 42
Sarkes Tarzian, Inc. v. *Philco Corp.*, 351 F.2d 557 (7th Cir. 1965) 5
Siebring v. *Hansen*, 346 F.2d 474 (8th Cir. 1965) 26
Skilling v. *United States*, 130 S. Ct. 2896 (2010) 17
Sosa v. *DIRECTV, Inc.*, 437 F.3d 923 (9th Cir. 2006) 20, 22, 27, 33
Takeda Chem. Indus., Ltd. v. *Mylan Labs., Inc.*, 549 F.3d 1381 (Fed. Cir. 2008) 43

TABLE OF AUTHORITIES—continued

	Page
Taltech Ltd. v. *Esquel Enters. Ltd.*, 604 F.3d 1324 (Fed. Cir. 2010)	31
Taurus IP, LLC v. *DaimlerChrysler Corp.*, 726 F.3d 1306 (Fed. Cir. 2013)	41
Teese v. *Huntgingdon*, 64 U.S. (23 How.) 2 (1859)	3
Therasense, Inc. v. *Becton, Dickinson & Co.*, 649 F.3d 1279 (Fed. Cir. 2011)	43
United States v. *Menasche*, 348 U.S. 528 (1955)	25
Vischer Prods. Co. v. *Nat'l Pressure Cooker Co.*, 92 F. Supp. 138 (W.D. Wis. 1950)	4, 18
Warner-Jenkinson Co. v. *Hilton Davis Chem. Co*, 520 U.S. 17 (1997)	12
Yamanouchi Pharm. Co. v. *Danbury Pharm. Inc.*, 231 F.3d 1339 (Fed. Cir. 2000)	43

CONSTITUTION AND STATUTES

U.S. Const. art. I, § 8, cl. 8	19
amend. I	19
Pub. L. No. 93-600, 88 Stat. 1955 (1975)	36
15 U.S.C § 1117(a)	36
17 U.S.C. § 505	3, 35
35 U.S.C. § 70 (1946)	3, 25
§ 273(f)	28
§ 283	25, 27
§ 285 (1952)	5
§ 285	25, 26
35 U.S.C. § 285, Historical and Revision Notes	5, 17

TABLE OF AUTHORITIES—continued

RULES

Page

Fed. R. Civ. P. 11 (1937) 29
11 (1983)..... 30
11 ..... 29, 30
Fed. R. Civ. P. 11, Notes of Advisory Committee on Rules—1983 Amendment..... 29
Sup. Ct. R. 14.1(a) 42

LEGISLATIVE HISTORY

H.R. 3309, 113th Cong. (2013)..... 41
H.R. 845, 113th Cong. (2013)..... 41
S. Rep. No. 79-1503 (1946)..... 4
S. Rep. No. 93-1400 (1974), *as reprinted in* 1974 U.S.C.C.A.N. 1732..... 36, 37

SCHOLARLY AUTHORITY

J.P. Federico, *Commentary on the New Patent Act*, 75 J. Pat. & Trademark Off. Soc'y 161 (1993)..... 5, 17, 26, 38

OTHER AUTHORITIES

American Heritage Dictionary (4th ed. 2009) 20
Ryan Davis, *After Legal Win, Nintendo Buys Patents of Failed "Troll,"* Law 360 (Jan. 10, 2014), http://www.law360.com/ip/articles/500282?utm_source=shared-articles&utm_medium=email&utm_campaign=shared-articles 41
ICON Health & Fitness, http://www.iconfitness.com 7

TABLE OF AUTHORITIES—continued

Page

David J. Kappos, *Facts Show Patent Trolls Not Behind Rise In Suits*, Law360 (Jan. 15, 2014), http://www.law360.com/ip/articles/501142?utm_source=shared-articles&utm_medium=email&utm_campaign=shared-articles 40

INTRODUCTION

Petitioner and its *amici* identify what they characterize as a serious policy problem—namely, increased litigation by so-called patent trolls—and ask this Court to solve that problem by adopting a construction of § 285 contrary to its language and to Congress's intent. Section 285, which Congress adopted in 1952 (long before a troll was anything other than a fairy tale villain), targets neither plaintiffs nor defendants and allows awards of attorney fees where a case meets a specific standard, namely, the case is "exceptional." The Federal Circuit, which Congress has charged with interpreting and applying the United States patent laws, has developed specific criteria for identifying such exceptional cases—criteria consistent with the statute's text and history and the protections of the First Amendment—and it is undisputed that, under those criteria, the district court correctly denied Octane an award of fees in this non-exceptional case. The policy problem petitioner and its *amici* want this Court to solve is not presented in this case, which all concede does not involve a patent troll, and this Court would not be the proper body to craft a solution, even if the problem were presented here.

Section 285 grants courts discretion to award attorney fees only in "exceptional cases." The "exceptional case" language was Congress's attempt to codify judicial interpretations of a previous statutory provision that created a narrow exception to the general "American" rule against awarding attorney fees to a prevailing party. Those earlier judicial interpretations permitted an award of attorney fees for specific instances of misconduct or more generally if, and only

if, the court found that the suit was vexatious and unjustified.

In 2005, the Federal Circuit concisely restated the law regarding § 285 in *Brooks Furniture Manufacturing, Inc.* v. *Dutailier International, Inc.*, 393 F.3d 1378 (Fed. Cir. 2005). The court identified the same categories of misconduct that had long been held to qualify as "exceptional." Recognizing that, even without specific misconduct, pursuit of a vexatious and unjustified lawsuit may also qualify as "exceptional," the court explained that "[a]bsent misconduct in [the] conduct of the litigation or in securing the patent, sanctions may be imposed against the patentee only if both (1) the litigation is brought in subjective bad faith, and (2) the litigation is objectively baseless." *Id.* at 1381.

In articulating this standard, the Federal Circuit recognized, as did courts before it, that the filing of a lawsuit is constitutionally protected, and that, absent specific wrongful acts, a party's exercise of its right to petition the government cannot be deemed misconduct unless the party is engaged in a "sham." See *Prof'l Real Estate Investors* v. *Columbia Pictures Indus.*, 508 U.S. 49, 60–61 (1993) ("*PRE*"). Indeed, these principles had been recognized by the circuit courts since the enactment of § 285.

Ignoring all of this, Octane contends that the Court should conclude that § 285 gives district courts unfettered discretion to base an award of attorney fees on some sort of evaluation of the totality of circumstances in all cases under the inherently imprecise "unreasonableness" standard. Although Octane purports to rely on the statutory text, its proposal would effectively read the phrase "exceptional cases" out of the statute and eliminate a key limitation Congress imposed on court authority to award attorney fees to

prevailing parties. Not only would Octane's reading of § 285 render its language superfluous, but it would upend Congress's intent to incorporate specific principles governing when discretion to award attorney fees in patent cases may appropriately be exercised.

Finally, despite Octane's assertions regarding ICON and this litigation, neither the district court nor the Federal Circuit had any difficultly rejecting Octane's contention that this case is exceptional. Under any standard, this is not an exceptional case. It is merely an ordinary intellectual property dispute between industry competitors, and the parties should bear their own costs of litigation.

COUNTERSTATEMENT OF THE CASE

A. Statutory Background

Following the traditional American Rule for awards of attorney fees, this Court held many years ago that an award of attorney fees was unavailable in patent infringement lawsuits. See *Parks* v. *Booth*, 102 U.S. 96, 107 (1880); *Philip* v. *Nock*, 84 U.S. (17 Wall.) 460, 462 (1873); *Teese* v. *Huntingdon*, 64 U.S. (23 How.) 2, 8 (1859); *Day* v. *Woodworth*, 54 U.S. (13 How.) 363, 372–73 (1851).

In 1946, Congress adopted an exception to the prohibition against awards of attorney fees in patent infringement cases, providing that a "court may in its discretion award reasonable attorney's fees to the prevailing party upon the entry of judgment on any patent case." 35 U.S.C. § 70 (1946).[1] Notwithstand-

---

[1] The text of 35 U.S.C. § 70 (1946), is comparable to the fee-shifting provision of the Copyright Act, which allows courts to consider awarding attorney fees in all cases. *See* 17 U.S.C. § 505 ("the court may also award a reasonable attorney's fee to the prevailing party as part of the costs."); *see also Fogerty* v. *Fanta-*

ing this seemingly broad language, Congress indicated that an award of fees should not be an "ordinary thing," and that an award of attorney fees should serve to discourage infringement, as well as to "prevent a gross injustice to an alleged infringer." S. Rep. No. 79-1503, at 2 (1946).

Consistent with the purpose of ensuring that an award of fees not be ordinary, courts typically interpreted § 70 to allow them to exercise their discretion to award fees in circumstances involving misconduct by a party. As one court explained, the 1946 statute "should be bottomed upon a finding of unfairness or bad faith in the conduct of the losing party." *Park-in-Theatres* v. *Perkins*, 190 F.2d 137, 142 (9th Cir. 1951); see also *Am. Chain & Cable Co.* v. *Rochester Ropes, Inc.*, 199 F.2d 325, 330 (4th Cir. 1952). Thus, for example, fraud on the Patent Office or litigation misconduct could serve as the basis for an award of fees. See *Dubil* v. *Rayford Camp & Co.*, 184 F.2d 899, 903 (9th Cir. 1950); *Vischer Prods. Co.* v. *Nat'l Pressure Cooker Co.*, 92 F. Supp. 138, 139 (W.D. Wis. 1950).

Absent such misconduct, courts held that they should not exercise their discretion to award fees "except in situations involving vexatious and unjustified litigation." *Am. Chain & Cable Co.*, 199 F.2d at 330; *Laufenberg, Inc.* v. *Goldblatt Bros.*, 187 F.2d 823, 825 (7th Cir. 1951) ("statute should be invoked only where vexatious or unjustified litigation is shown"); *Phillips Petroleum Co.* v. *Esso Standard Oil Co.*, 91 F. Supp. 215, 217 (D. Md.) ("[O]ne of the objects ... is to discourage vexatious and unjustified litigation, and [the statute] should be invoked when, but only when, such is clearly shown."), *aff'd*, 185 F.2d 672 (4th Cir.

---

sy, Inc., 510 U.S. 517, 533 (1994) ("The word 'may' clearly connotes discretion.").

1950); *Park-in-Theaters*, 190 F.2d at 142; *Am. Chain & Cable Co.*, 199 F.2d at 330 ("discretion should not be exercised except in situations involving vexatious and unjustified litigation").

In the Patent Act of 1952, just six years after the enactment of § 70, Congress overhauled the patent laws, including the provision governing attorney fees. In 35 U.S.C. § 285, Congress provided that a "court in exceptional cases may award reasonable attorney fees to the prevailing party." 35 U.S.C. § 285 (1952). Congress specifically removed the phrase "in its discretion" that had been in § 70, and added the phrase "in exceptional cases" "to express the intention of the old statute" not only "as shown by its legislative history," but also "as interpreted by the courts." J.P. Federico, *Commentary on the New Patent Act*, 75 J. Pat. & Trademark Off. Soc'y 161, 216 (1993); see also *Monolith Portland Midwest Co.* v. *Kaiser Aluminum & Chem. Corp.*, 407 F.2d 288, 293 (9th Cir. 1969) ("The present section 285 is a codification of the interpretation placed by the courts upon the prior statute."); 35 U.S.C. § 285, Historical and Revision Notes.

In the wake of § 285's enactment and before the Federal Circuit's formation in 1982, regional circuit courts interpreted the phrase "exceptional cases" to mean those cases involving the same inappropriate conduct recognized by courts interpreting the 1946 statute, such as willful patent infringement, inequitable conduct or fraud in procuring a patent, other affirmative misconduct, or vexatious or unjustified litigation. See, *e.g.*, *Purer & Co.* v. *Aktiebolaget Addo*, 410 F.2d 871, 880 (9th Cir. 1969); *Sarkes Tarzian, Inc.* v. *Philco Corp.*, 351 F.2d 557, 560 (7th Cir. 1965) ("fees should not be awarded under 35 U.S.C. § 285 except ... where fraud and wrong-doing are clearly

proved"); *Livesay Window Co.* v. *Livesay Indus., Inc.*, 251 F.2d 469, 475 (5th Cir. 1958).

After the Federal Circuit's creation, that court followed the standards articulated by earlier courts. In *Brooks*, the court of appeals distilled the governing standard, explaining that a case may be found exceptional "when there has been some material inappropriate conduct related to the matter in litigation, such as willful infringement, fraud or inequitable conduct in procuring the patent, misconduct during litigation, vexatious or unjustified litigation, conduct that violates Fed.R.Civ.P. 11, or like infractions." *Brooks Furniture*, 393 F.3d at 1381. To spell out when a case may be considered unjustified or vexatious, absent specifically identifiable misconduct, the *Brooks* court stated that a patent owner's infringement case may be found exceptional "only if both (1) the litigation is brought in subjective bad faith, and (2) the litigation is objectively baseless." *Id.* In stating this test, the court recognized that initiating a patent infringement lawsuit is activity protected by the Petition Clause of the U.S. Constitution, and thus ensured that for a case not involving fraud or similar specific misconduct to be "exceptional," the lawsuit itself must be a form of misconduct that takes it outside the constitutionally protected sphere. See *id.* (citing *PRE*, 508 U.S. at 60–61).

B. Factual Background

ICON is a fitness industry leader in the innovation, manufacture, and sale of consumer fitness and exercise products and services. It consistently engages in research and development of new products and technologies, resulting in hundreds of patents. ICON manufactures and sells its innovative products and services to home-users as well as commercial customers under well-known brand names such as Nor-

dicTrack, Pro-Form, HealthRider, iFit, and Free-Motion. (See Federal Circuit Appendix at 1671–76, *ICON Health & Fitness, Inc.* v. *Octane Fitness, LLC*, Nos. 2011-1521, -1636 (Fed. Cir. May 14, 2012) ("CAFC JA").) See generally http://www.iconfitness.com. ICON's products include elliptical exercise machines. These machines usually include two spaced-apart foot pads that, when engaged by a user, follow an elliptical path generally intended to simulate the natural motion of running or walking. (J.A. 106a–108a; SA-10.)

1. The '710 Patent

As part of ICON's research and development efforts, ICON employees invented an improved elliptical exercise machine that required less floor space and allowed adjustments to the size of the elliptical path to fit the different strides of individual users. (SA-17.) This invention is disclosed and patented in U.S. Patent No. 6,019,710 ("the '710 patent"). (SA-10.) The patent, in part, describes an elliptical exercise machine that uses linear reciprocating displacement of a first end of a stroke rail to convert the motion of the second end of the stroke rail to follow an elliptical path:

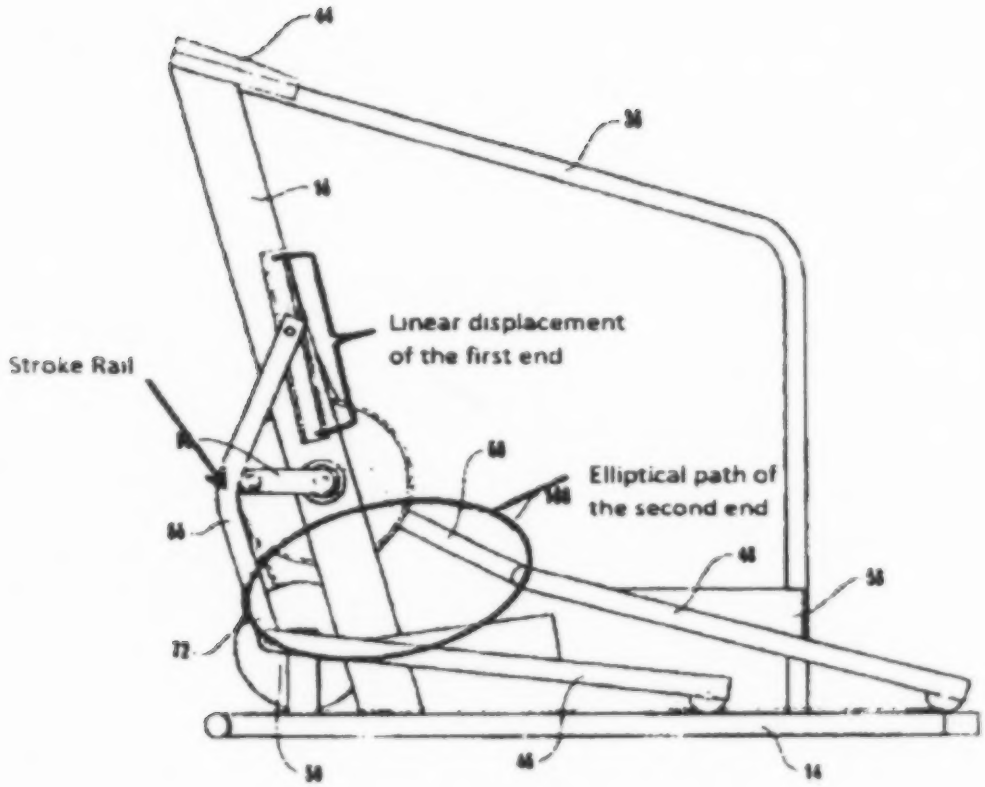

FIG. 3

(SA-13; Octane Br. 6.) During the development of the invention, ICON built a prototype. (J.A. 102a–104a.)[2] However, despite the innovation reflected in the invention, ICON decided not to commercialize it, because of cost and other market considerations. (J.A. 106a–108a.)

2. ICON's Lawsuit Against Octane

Octane's founders, as former executives of one of ICON's competitors, were aware of ICON and its intellectual property rights from Octane's inception.

---

[2] Octane also built a similar working prototype. (*See* Octane Br. 10 n.3. *But see id.* at 8, 51.)

(CAFC JA 1939; see also J.A. 109a).[3] Octane discovered ICON's '710 patent in a patent search that Octane commissioned to find patents that potentially might be infringed by Octane's products. (Dep. of Timothy J. Porth (Dkt. 206-3) at 81–82, *ICON Health & Fitness, Inc.* v. *Octane Fitness, LLC*, No. 09-cv-319 (D. Minn. Aug. 4, 2011).)[4] Octane asserts that it sought and received an opinion concluding that its products did not infringe the '710 patent. (*Id.*) Octane also claims it received another non-infringement opinion from the third-party from which it licensed other elliptical-related patents. (*Id.* at 74–76.) Notwithstanding these opinions, however, Octane purchased patent infringement insurance to protect it against a potential lawsuit. (*Id.* at 85–87.)

Unaware of Octane's private opinions, ICON filed a patent infringement lawsuit in 2008 against Octane and one of Octane's distributors in the United States District Court for the Central District of California, one of ICON's principal strategic markets. ICON alleged infringement of U.S. Patent No. 5,104,120 ("the '120 patent") and the '710 patent. (J.A. 1a.) In ICON's view, Octane's machines infringed the '710 patent because, among other things, they used linear reciprocating displacement of a first end of a stroke rail to convert the motion of the second end of the stroke rail to follow an elliptical path. (CAFC JA 2312–17.) Shown below is one of Octane's machines and ICON's understanding of how the constrained movement back-and-forth between two points of one

---

[3] One of Octane's executives also had been employed by NordicTrack, which was acquired by ICON. (*See* Dep. of Timothy J. Porth (Dkt. 123-2) at 38.)

[4] All "Dkt." entries refer to materials filed in the district court that are available through the District of Minnesota PACER system for electronic record access.

end of the "stroke rail" results in movement of the other end of the stroke rail along an elliptical path as required by the '710 patent:

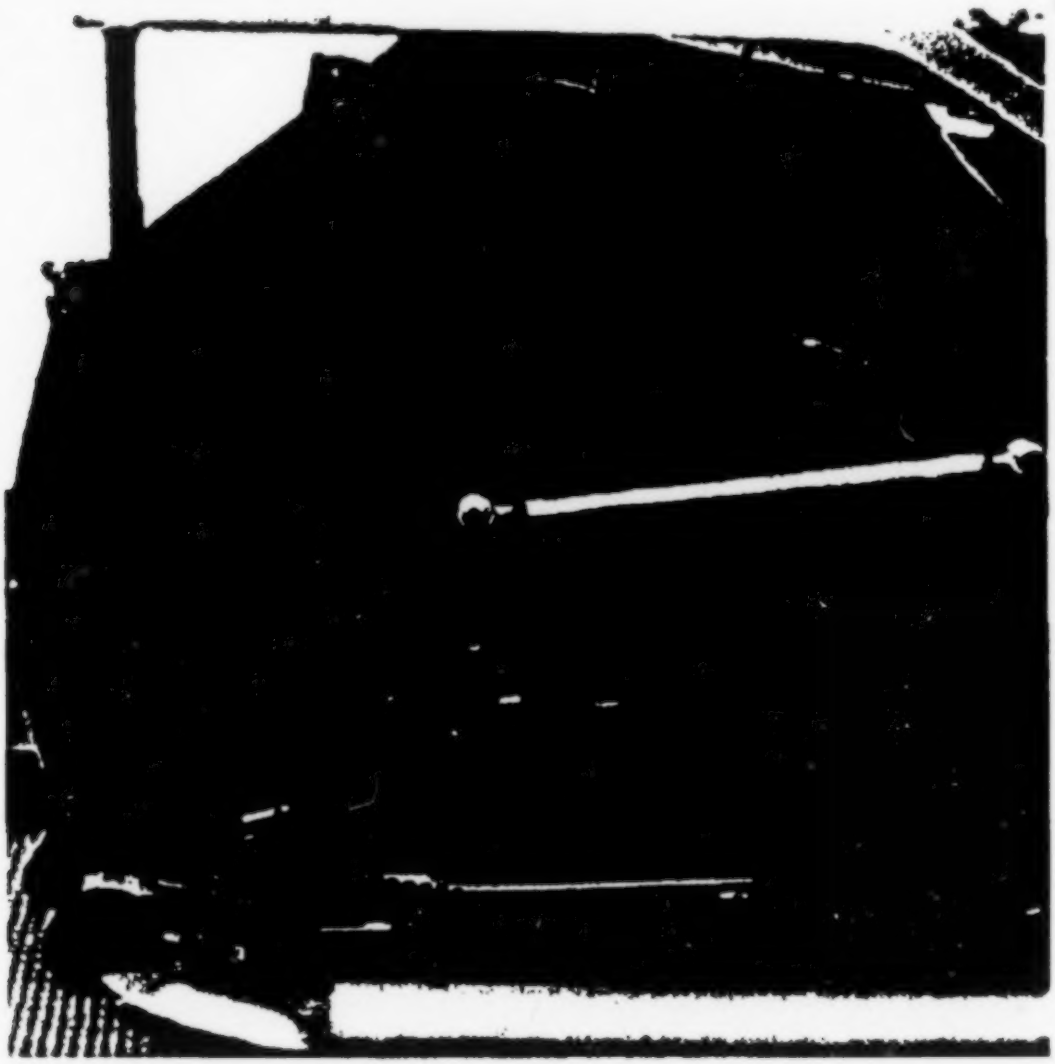

(See Br. for Appellant ICON Health & Fitness, Inc. at 27, *ICON Health & Fitness, Inc.* v. *Octane Fitness, LLC*, No. 2011-1521 (Fed. Cir. Nov. 10, 2011).)

Shortly after ICON filed suit, the district court severed ICON's case against Octane's distributor from the case against Octane, and dismissed the case against the distributor without prejudice. (J.A. 51a, 59a.) The court then transferred ICON's case against

Octane to the United States District Court for the District of Minnesota. (*Id.* at 57a.)

In a separate lawsuit in a different district against a different defendant, the court construed the claims of the '120 patent in a manner that affected ICON's claims against Octane in this case. Although the order was neither binding nor preclusive in this case, ICON voluntarily withdrew its claims against Octane for infringement of the '120 patent.[5] (J.A. 60a.) This voluntary dismissal of the '120 patent left only ICON's infringement allegations based on the '710 patent, which were the subject of discovery, claim construction, and summary judgment.

3. Claim Construction and Summary Judgment

Between September and October 2009, the parties disclosed their respective proposed constructions of certain terms in the asserted claims of the '710 patent. (J.A. 63a–91a.) The parties focused on four terms in need of construction. At the time, neither party offered a construction of the term "stroke rail." There was no need, because Octane admitted that its accused products included the claimed "stroke rail." (J.A. 171a.)

Nine months later, Octane supplemented its claim construction disclosures and non-infringement contentions to, for the first time, raise disputes with respect to the "stroke rail" element. (Pet. App. 56a n.4.)

Five business days after injecting this new "stroke rail" issue into the case, Octane moved for summary

---

[5] Octane asserts that the dismissal was "forced"—yet "voluntary." (Octane Br. 11.) In actuality, ICON worked with Octane to streamline the case by dismissing the claims by stipulation. (J.A. 60a.)

judgment of non-infringement, even as the parties prepared for the *Markman* hearing on claim construction. See *Markman* v. *Westview Instruments, Inc.*, 52 F.3d 967, 976 (Fed. Cir. 1995) (en banc) ("An infringement analysis entails two steps ... determining the meaning and scope of the patent claims .... [and] comparing the properly construed claims to the device accused of infringing."), *aff'd*, 517 U.S. 370 (1996). (J.A. 14a.) In October 2010, the district court conducted the *Markman* hearing and, in December 2010, issued its decision construing various claim terms. The court adopted Octane's late-proposed construction of "stroke rail" and held that "linear reciprocating displacement" was displacement along the path of a straight line. (Pet. App. 69a–71a.) The court then turned to Octane's motion for summary judgment of non-infringement. (J.A. 20a–30a.)

Aside from its literal infringement arguments, ICON had opposed Octane's summary judgment motion by relying on the doctrine of equivalents.[6] ICON presented evidence that Octane's accused devices included the equivalent of a "stroke rail" and "linear reciprocating displacement." Although the district court found the testimony and analysis of ICON's expert relevant and sufficiently reliable to warrant consideration (Pet. App. 45a–48a), the court nonetheless concluded that Octane's accused products did not include a "stroke rail" or "linear reciprocating displacement" and granted Octane's motion for summary judgment.

---

[6] Infringement under the doctrine of equivalents is found if the differences between a claim element and a corresponding component in the accused device are insubstantial. *Warner-Jenkinson Co.* v. *Hilton Davis Chem. Co*, 520 U.S. 17, 34, 40 (1997).

4. Octane's Motion for Attorney Fees

After prevailing on summary judgment, Octane moved for an award of attorney fees under § 285.[7] (Pet. App. 19a–28a.) Octane asserted that ICON's case was "vexatious," "abusive," "baseless," and brought in bad faith. (J.A. 266a–267a, 271a.) The district court denied Octane's motion, finding that the case was not an "exceptional" one that would qualify for a fee award. Because Octane did not argue that ICON committed litigation misconduct, inequitable conduct, Rule 11 violations, or similar specific acts of misconduct (*id.* at 257a–272a), the district court analyzed Octane's request under the vexatious and unjustified litigation test from *Brooks*, concluding that ICON's case was neither objectively baseless nor brought in bad faith. (Pet. App. 25a, 28a.)

The court first found that ICON's suit was not objectively baseless and rejected Octane's assertions that the court's non-infringement conclusions were clearly evident and easily reached. (Pet. App. 22a.) The court found that ICON reasonably relied on pre-suit testing and expert opinion regarding its infringement claims. (*Id.* at 25a.) And the court found it irrelevant that Octane's products were visually distinct from the figures in the '710 patent, because "[i]nfringement is determined by comparing the accused devices to the properly-construed claims." (*Id.* (citing *IMS Tech., Inc.* v. *Haas Automation, Inc.*, 206 F.3d 1422, 1429 (Fed. Cir. 2000)).) Moreover, the asserted claims were "means-plus-function" claims, and

---

[7] At the time, Octane asserted that its attorney fees were about $1.3 million but provided no description of how those fees were incurred. There is no record support for the $1.8 million in fees that Octane now claims, nor is there anything to show that Octane's fees, whatever their amount, were reasonably incurred.

ICON had relied on Federal Circuit case law to show that such claims require a structure that is merely capable of performing the function, rather than actual performance. (*Id.* at 24a.) Because the court found ICON's case was not objectively baseless, it explained that its "inquiry could end here." (*Id.* at 25a.)

Nonetheless, the court also rejected Octane's other arguments and found that ICON had not acted in bad faith. It rejected Octane's suggestions that an award of attorney fees was appropriate because ICON is a bigger company that never commercialized the invention claimed by the '710 patent. (Pet. App. 27a–28a.) And the court found that two emails between ICON sales personnel did not evidence bad faith. It explained that the emails, viewed "in the light most favorable to Octane," exhibited nothing more than "stray comments by employees with no demonstrated connection to the lawsuit." (*Id.* at 27a.) Ultimately, the fact that Octane, and the court, disagreed with ICON's infringement analysis was not evidence of either baselessness or bad faith. (*Id.* at 25a, 27a.)

C. The Federal Circuit Appeal

ICON appealed the summary judgment of non-infringement, and Octane cross-appealed the denial of its request for attorney fees. (Pet. App. 1a.) Octane argued that the district court should have evaluated the totality of circumstances rather than whether ICON's suit was objectively baseless and brought in bad faith. (Br. for Defendant-Cross Appellant Octane Fitness, LLC at 55–60, *ICON Health & Fitness, Inc.* v. *Octane Fitness, LLC*, Nos. 2011-1521, -1636 (Fed. Cir. Jan. 27, 2012) ("Octane Fed. Cir. Brief").)

After full briefing and oral argument, the Federal Circuit affirmed the district court's decisions. With

respect to Octane's request for attorney fees, the court of appeals found no error in the district court's application of the law. (Pet. App. 17a.) Upon review of the record, the court agreed that this was not an exceptional case. (*Id.*)

SUMMARY OF THE ARGUMENT

When Congress enacted § 285 of the Patent Act, it codified existing judicial interpretations of § 285's predecessor, which held that attorney fee awards in patent cases were limited to situations involving specific litigation misconduct, willful patent infringement, inequitable conduct or fraud in procuring a patent, or vexatious or unjustified litigation on the part of the losing party—in other words "exceptional cases." Absent such misconduct, courts were not authorized to exercise discretion to award attorney fees.

The Federal Circuit concisely articulated the law regarding § 285 in *Brooks Furniture Manufacturing, Inc.* v. *Dutailier International, Inc.*, 393 F.3d 1378. In *Brooks*, the court identified the categories of inappropriate conduct that would allow courts to exercise discretion to award attorney fees, including vexatious and unjustified litigation. The court also adopted a test to determine whether the very lawsuit itself constituted such vexatious or unjustified litigation. The Federal Circuit recognized, as did courts before it, that the filing of a lawsuit is constitutionally protected unless it is a sham and that "exceptional cases" are grounded in misconduct. Indeed, these principles had been recognized by the circuit courts since the enactment of § 285.

Octane and its *amici* ask the Court to reinterpret § 285, contrary to 60 years of consistent interpretation, to give district courts full discretion to determine additional types of cases that would permit an

award of attorney fees along with the discretion to award those fees in those cases. However, this request is inconsistent with the text of § 285 and with its legislative history. Octane's arguments rest on the fiction that the Federal Circuit has tied the hands of the district courts by allowing only sham litigation to qualify as an exceptional case. To the contrary, the Federal Circuit has repeatedly stated and held, consistent with prior authority, that the exceptional case inquiry is much broader and may be based on various forms of misconduct.

Because the text and legislative history of § 285 and its long-standing interpretation by the courts do not support Octane's proposed change in the law, Octane looks beyond patent law to the fee provision of the Lanham Act. But Octane's arguments are still without support. Despite significant disagreement among the circuit courts of appeals, their interpretations of the Lanham Act show that, as is true under § 285, "exceptional cases" under the Lanham Act are also grounded in misconduct.

Lastly, although Octane recasts the facts of this case to focus on the patent troll debate, Congress enacted § 285 long before the arrival of patent trolls, and this Court does not engage in policy-making through statutory interpretation. Today, § 285 means what Congress intended it to mean in 1952, namely, that courts may exercise discretion to award attorney fees in cases of specific litigation misconduct, willful patent infringement, inequitable conduct or fraud in procuring a patent, or vexatious or unjustified litigation on the part of the losing party. Because this case is devoid of any such misconduct, the Court should affirm the judgment of the district court and Federal Circuit that an award of attorney fees is inappropriate.

ARGUMENT

I. THE LOWER COURTS APPLIED THE CORRECT STANDARD TO DETERMINE THAT THIS IS NOT AN EXCEPTIONAL CASE UNDER § 285.

Section 285 creates a narrow exception to the American Rule against awarding attorney fees to a prevailing party by granting courts discretion to award fees only in "exceptional cases." Congressional intent and long-standing precedent make clear that absent specific misconduct, a case is "exceptional" only when it is objectively baseless and involves bad faith.

A. Section 285's "Exceptional Case" Language Incorporates The Prior Judicial Standards.

When it enacted § 285, as the historical notes to this provision make clear, Congress adopted the standards applied by courts interpreting that statute's predecessor, § 70 of the 1946 statute. Congress explained that § 285 "is substantially the same as the corresponding provision in" § 70. 35 U.S.C. § 285, Historical and Revision Notes. The phrase "'in exceptional cases' has been added as expressing the intention" of § 70, "as shown by its legislative history and *as interpreted by the courts*." *Id.* (emphasis added); see Federico, *supra*, at 216. Thus, the statutory phrase "exceptional cases" necessarily draws its meaning from the decisions interpreting § 70. *Monolith*, 407 F.2d at 293 ("The present section 285 is a codification of the interpretation placed by the courts upon the prior statute."); Cf. *Skilling* v. *United States*, 130 S. Ct. 2896, 2932 (2010) (interpreting 18 U.S.C. § 1346, according to the pre-existing honest-

services fraud cases that Congress intended to incorporate into the statute).

Contrary to the suggestion of both Octane and the United States (Octane Br. 36–37; U.S. Br. 9–14), the courts interpreting § 70 had not merely applied that statute according to some unmoored assessment of "reasonableness" or the totality of the circumstances. Rather, courts exercised their discretion in particular circumstances, typically involving misconduct by a party, and adopted particular standards governing when an award of fees would be appropriate. Fraud on the patent office or litigation misconduct, for example, could warrant an award of fees. See *Dubil*, 184 F.2d at 903; *Vischer Prods.*, 92 F. Supp. at 139. The courts also explained that in the absence of specific misconduct of this kind, the discretion to award fees should not be exercised "except in situations involving vexatious and unjustified litigation." *Am. Chain & Cable Co.*, 199 F.2d at 330; *Laufenberg*, 187 F.2d at 825 ("statute should be invoked only where vexatious or unjustified litigation is shown"). Indeed, the United States in its brief provides "examples" of conduct that could support a fee award under the 1946 statute, and they fall into these precise categories: fraud on the Patent Office, willful infringement, litigation misconduct, or vexatious and unjustified litigation. (U.S. Br. 11–13.)

B. The Federal Circuit's Exceptional Case Standard Appropriately Follows Prior Judicial Standards.

The Federal Circuit's standard for determining whether a case is exceptional under § 285 correctly incorporates the case law standards that Congress sought to codify with the phrase "exceptional cases." As the Federal Circuit explained in *Brooks*, courts may find a case exceptional "when there has been

some material inappropriate conduct related to the matter in litigation, such as willful infringement, fraud or inequitable conduct in procuring the patent, misconduct during litigation, vexatious or unjustified litigation, conduct that violates Fed.R.Civ.P. 11, or like infractions." *Brooks Furniture*, 393 F.3d at 1381. This standard tracks the prior case law interpreting § 70 that Congress incorporated into § 285.

Throughout its brief, Octane ignores the numerous grounds upon which an exceptional case finding may be based and pretends that *Brooks* adopted a single standard based on *PRE* that a case must be "objectively baseless" and brought in "bad faith." 393 F.3d at 1381. Octane misunderstands *Brooks*. The Federal Circuit laid out the various grounds that would support an exceptional case determination and stated that the objectively baseless and bad faith test applies only in the absence of "misconduct in conduct of the litigation or in securing the patent." *Id.* Once litigation misconduct and inequitable conduct are removed from the list in *Brooks*, the only remaining category recognized by courts applying § 285 and its predecessor is "vexatious or unjustified litigation." *Id.* And that category, as the *Brooks* court recognized, corresponds to the "sham" litigation category identified in *PRE*, *i.e.*, a case that is objectively baseless and brought in bad faith.

Among the bundle of rights given to patent holders is the right to exclude others and to petition the courts to resolve any dispute concerning that right to exclude. See U.S. Const. art. I, § 8, cl. 8; U.S. Const. amend. I; *PRE*, 508 U.S. at 56.[8] This right to petition

---

[8] The First Amendment provides that "Congress shall make no law ... abridging ... the right of the people ... to petition the Government for a redress of grievances." U.S. Const. amend. I.

is "one of 'the most precious of the liberties safeguarded by the Bill of Rights." *BE & K Constr. Co.* v. *NLRB*, 536 U.S. 516, 524 (2002). The right to file and maintain a lawsuit is constitutionally protected unless, as this Court recognized in *PRE*, the lawsuit is a "sham." *PRE*, 508 U.S. at 60–61; *BE & K Constr.*, 536 U.S. at 525 ("'[T]he right of access to the courts is ... but one aspect of the right to petition.'").[9] For the lawsuit to be a sham, it must first be objectively baseless, *PRE*, 508 U.S. at 60, in other words "unjustified," as cases applying the 1946 attorney fee statute stated. And a sham lawsuit also requires bad faith, *id.*, another requirement consistent with cases interpreting the 1946 law, see *Park-in-Theatres*, 190 F.2d at 142, and consistent with the notion of "vexatious," which is commonly understood to mean "[c]ausing" vexation or "[i]ntend[ing]" to harass or annoy. See *The American Heritage Dictionary* 1915 (4th ed. 2009).

Indeed, the relationship between the concerns at issue in *PRE* and the vexatious and unjustified litigation standard was recognized and adopted by circuit courts in early interpretations of § 285. As one court explained shortly after the enactment of § 285:

> In order to make certain that awarding of attorney's fees should not thwart the general policy

---

[9] This protection was originally recognized and formalized in the antitrust context; however, the antitrust *Noerr-Pennington* doctrine is widely applied outside the antitrust context. *See, e.g.*, *BE & K Constr.*, 536 U.S. at 525; *Sosa* v. *DIRECTV, Inc.*, 437 F.3d 923, 931 (9th Cir. 2006); *IGEN Int'l, Inc.* v. *Roche Diagnostics GmbH*, 335 F.3d 303, 310 (4th Cir. 2003); *Cheminor Drugs, Ltd.* v. *Ethyl Corp.*, 168 F.3d 119, 128–29 (3d Cir. 1999). The *Noerr-Pennington* doctrine serves to ensure that, absent misconduct, the exercise of constitutionally protected rights will not expose a party to liability that would not otherwise exist.

> that Courts are open for resolution of controversy without the litigants bearing the ultimate actual costs of the machinery, this has given rise to the rule that to award attorney's fees to the defendant, the plaintiff's action must have been instituted in bad faith, as vexatious, unjustifiable litigation with no real basis.

Livesay Window, 251 F.2d at 475. The Federal Circuit in *Brooks* merely restated the long-standing view of "exceptional cases" under § 285, a view firmly based on congressional intent and the cases decided under the 1946 statute. See also *Am. Chain & Cable Co.*, 199 F.2d at 330 ("discretion should not be exercised except in situations involving vexatious and unjustified litigation").

C. The *Brooks* Court Properly Relied On *PRE*.

Despite the match between the vexatious-and-unjustified-litigation standard and the sham litigation standard from *PRE*, Octane and its *amici* contend that *PRE* is inapplicable. (Octane Br. 22–24; U.S. Br. 24–26.) They are wrong.

Octane argues that the First Amendment has no application in the context of allegedly weak patent suits or fee shifting statutes (Octane Br. 24), but offers no support for that proposition. Octane, echoed by the United States, also argues that the *Noerr-Pennington* doctrine is limited to circumstances where filing a lawsuit could be treated as a distinct and actionable wrong and that the doctrine has no applicability to fee-shifting statutes. (*Id.* at 23–25; U.S. Br. 25–26.) Whatever the merit of that argument as applied to fee-shifting statutes that are not premised on wrongdoing or misconduct, it has no relevance here. No one disputes that "exceptional cases"

for purposes of § 285 are cases involving some form of culpable conduct by a litigant. Where, as here, there is no litigation misconduct or inequitable conduct in procuring the patent, a prevailing accused infringer seeking an award of fees is asking the court to treat the lawsuit itself as misconduct.

Under these circumstances, particularly where Congress made clear its intent that fee awards should not be the norm in patent cases, the Court should construe § 285 to avoid the risk of burdening the exercise of constitutionally protected rights. See *Sosa* v. *DIRECTV, Inc.*, 437 F.3d 923, 931 (9th Cir. 2006) ("Under the *Noerr-Pennington* rule of statutory construction, we must construe federal statutes so as to avoid burdening conduct that implicates the protections afforded by the Petition Clause unless the statutes clearly provide otherwise."). Cf. *BE & K Constr.*, 536 U.S. at 535–37 (narrowly construing statute to avoid constitutional question); *E. R.R. Presidents Conference* v. *Noerr Motor Freight, Inc.*, 365 U.S. 127, 138 (1961) ("The right of petition is one of the freedoms protected by the Bill of Rights, and we cannot, of course, lightly impute to Congress an intent to invade these freedoms."). There is no indication in the statutory language or legislative history of § 285 that Congress intended to "discourage patentees from bringing reasonable claims of infringement by raising the specter of fee shifting—even when the patentee's legitimate claims are on less than the firmest ground." See *Kilopass Tech., Inc.* v. *Sidense Corp.*, __ F.3d __, 2013 WL 6800885, at *13 (Fed. Cir. Dec. 26, 2013).

Before unleashing a regime that will seriously chill the exercise of First Amendment protected rights, the Court should insist that Congress expressly declare that attorney fees can be imposed on a losing party

whenever a court determines based on the totality of the circumstances that the litigation was "unreasonable." Congress clearly did not do that in § 285.

D. The Arguments Presented By Octane And Its *Amici* Are Without Merit.

1. Octane's Arguments are Premised on the Fiction that an Exceptional Case Finding Always Requires Objective Baselessness and Bad Faith.

Octane's arguments rest on the fiction that the Federal Circuit permits exceptional case determinations against a patentee only if bad faith and objective baselessness are shown. (See Pet. at *i* (calling the *Brooks* two-part determination "exclusive"); Octane Br. at *i* (referring to "the Federal Circuit's rigid test").) Octane therefore asks this Court to hold that district courts may find cases exceptional in the absence of bad faith and objective baselessness based on their assessment of the "totality of the circumstances."

But courts are already free to find patent cases exceptional in the absence of bad faith or objective baselessness because not all categories of exceptional cases—such as cases involving Rule 11 violations—require bad faith or objective baselessness. See, *e.g.*, *Chambers* v. *NASCO, Inc.*, 501 U.S. 32, 47 (1991) (Rule 11 violations do not require a showing of bad faith); *Brooks Furniture*, 393 F.3d at 1381 (noting that cases may be exceptional for "conduct that violates Fed.R.Civ.P. 11, or like infractions").

Indeed, the Federal Circuit has expressly rejected the argument that both bad faith and objective baselessness are always necessary prerequisites for a determination that a case brought by the patentee is exceptional. *Monolithic Power Sys., Inc.* v. *O2 Micro*

Int'l Ltd., 726 F.3d 1359, 1367 (Fed. Cir. 2013). In *Monolithic Power*, the district court, considering the totality of the circumstances, found that the patentee engaged in litigation misconduct and unprofessional behavior and therefore found the case exceptional under § 285. *Id.* On appeal, the patentee argued that *Brooks* required a showing of both bad faith and objective baselessness. *Id.* at 1365–66. The Federal Circuit rejected that argument and stated that bad faith, objective basslessness, or "[a]dditional components are simply not required for an exceptional case finding based on litigation misconduct." *Id.* at 1367; see also *Old Reliable Wholesale, Inc.* v. *Cornell Corp.*, 635 F.3d 539, 549 (Fed. Cir. 2011) ("Where a party engages in litigation misconduct, fees can be awarded pursuant to section 285 even absent clear and convincing evidence that an asserted claim or defense is objectively baseless."); *E-Pass Techs., Inc.* v. *3Com Corp.*, 559 F.3d 1374, 1379 (Fed. Cir. 2009) (noting that the two-part *Brooks* determination is not exclusive).[10]

2. Octane's Interpretation of § 285 Renders the Phrase "In Exceptional Cases" Superfluous and Directly Contravenes Congressional Intent.

Both ICON and Octane agree that the word "may" in § 285 gives courts discretion to award attorney fees. Cf. *Fogerty* v. *Fantasy, Inc.*, 510 U.S. 517, 533

---

[10] Citing *Old Reliable Wholesale*, Octane asserts that the Federal Circuit narrowly defines litigation misconduct to be misconduct "independently sanctionable conduct by a party or his counsel during the course of the litigation." (Octane Br. 25 n.5.) In fact, *Old Reliable Wholesale* states only that "[l]itigation misconduct generally involves unethical or unprofessional conduct by a party or his attorneys during the course of adjudicative proceedings." 635 F.3d at 549.

(1994) ("The word 'may' clearly connotes discretion."). Where ICON and Octane disagree is whether the phrase "in exceptional cases" has independent meaning. See *United States* v. *Menasche*, 348 U.S. 528, 538–39 (1955) ("It is our duty 'to give effect, if possible, to every clause and word of a statute.'" (quoting *Inhabitants of Montclair Twp.* v. *Ramsdell*, 107 U.S. 147, 152 (1883)).

Octane argues that the term "exceptional," like the term "may," gives courts discretion to award attorney fees. (Octane Br. 19–21.) Under Octane's view of the statute, either "in exceptional cases" or "may award" thus is entirely superfluous. Octane's argument ignores "one of the most basic interpretive canons"—that a "'statute should be construed so that effect is given to all its provisions, so that no part will be inoperative or superfluous, void or insignificant.'" *Corley* v. *United States*, 556 U.S. 303, 314 (2009). It also ignores the fact that, when Congress actually intends to give district courts discretion in a broad range of patent cases, it does so expressly and does not confine the exercise of discretion to "exceptional cases." See 35 U.S.C. § 283 (courts "may grant injunctions in accordance with the principles of equity"); *eBay Inc.* v. *MercExchange, LLC*, 547 U.S. 388, 391–92 (2006) (explaining the traditional equitable discretion granted to courts under § 283).

Apart from flying in the face of the statute's language and basic principles of statutory construction, Octane's argument is inconsistent with the legislative history. Congress amended then § 70 to indicate that courts' discretion to award fees was limited to exceptional cases. 35 U.S.C. § 285. Section 70, § 285's predecessor, stated that "[t]he court *may in its discretion* award reasonable attorney's fees." 35 U.S.C. § 70 (1946). Congress removed language that could

have been read to confer discretion to award fees in *any* patent case and replaced it with language providing that a court "may" award attorney fees only "in exceptional cases"—not "in its discretion." 35 U.S.C. § 285.

Octane also uses dictionaries to argue that the word "exceptional" itself somehow denotes discretion. (Octane Br. 20 (citing multiple dictionaries).) Nothing about Octane's dictionary definitions, however, implies discretion. Rather, the dictionary definitions, which use terms like "unusual" or "uncommon," are consistent with Congress's intent that fee awards not be ordinary. Judicial interpretations of the 1946 statute implemented this intent by holding that attorney fee awards should "not to be allowed as a matter of course," and must be based on "vexatious or unjustified litigation." *Laufenberg*, 187 F.2d at 825. Congress adopted this judicial implementation in its revisions to the 1946 statute and enactment of § 285. Federico, *supra*, at 216.

Consistent with this congressional intent, the cases cited by Octane are grounded in unfair misconduct, bad faith misconduct, or misconduct of similar force. See, *e.g.*, *Gen. Instrument Corp.* v. *Hughes Aircraft Co.*, 399 F.2d 373, 381 (1st Cir. 1968) (considering bad faith and baseless argument that "strains credulity"); *Hughes Aircraft Co.* v. *Messerschmitt-Boelkow-Blohm, GmbH*, 625 F.2d 580, 585 (5th Cir. 1980) (affirming denial of fees and noting that claims were not "clearly meritless, "made in bad faith," or "frivolous"); *Kahn* v. *Dynamics Corp of Am.*, 508 F.2d 939, 945 (2d Cir. 1974) (misconduct before the USPTO and bad faith); *Kearney & Trecker Corp.* v. *Giddings & Lewis, Inc.*, 452 F.2d 579, 597 (7th Cir. 1971) (noting that focus is on "plaintiff's wrongdoing"); *Siebring* v. *Hansen*, 346 F.2d 474, 480 (8th Cir. 1965) (continued will-

ful infringement and contempt of court). Contrary to Octane's assertion, Octane's cases do not stand for the proposition that, in the absence of misconduct, attorney fees may be awarded whenever a party is able to articulate some perceived unfairness on the party of the losing party.

Simply stated, Octane asks this Court to adopt a reading of § 285 that would give courts discretion to award attorney fees in any case, subject only to a court's unfettered equitable assessment of the "reasonableness" or "unfairness" of the losing party's position. As the pre-*eBay* experience under the injunction statute, 35 U.S.C. § 283, demonstrated, a statute that appears to require the exercise of broad equitable discretion can easily collapse into a virtually automatic award of the discretionary remedy provided by the statute. Congress made clear, however, that attorney fee awards are not to be "ordinary," and are to be potentially available only in "exceptional cases." The standard Octane asks this Court to adopt would not only subvert that legislative intent, but would make litigation concerning whether an infringement action was an "exceptional case" a feature of virtually every patent suit. The Court should not impute to Congress the intention to impose this extra strain on scarce judicial resources. More fundamentally, the Court should reaffirm that, by including the "exceptional case" limitation in the statute, Congress plainly did not intend to "burde[n] conduct that implicates the protections afforded by the Petition Clause," *Sosa*, 437 F.3d at 931, and this Court should decline Octane's invitation to "lightly impute to Congress an intent[ion] to invade" this fundamental right, *E. R.R. Presidents*, 365 U.S. at 138.

3. In the Absence of Specific Misconduct, Objective Baselessness is a Necessary Requirement for a Case to be Exceptional.

The United States contends that "'objective baselessness'" should not be a requirement for exceptional cases because this requirement "appears to be overly restrictive." (U.S. Br. 27.) But even the United States is forced to admit that cases interpreting the 1946 fee-shifting provision required the losing party's legal or factual theory to be "'unjustified,' 'wholly unjustified,' 'unwarranted,' 'unreasonable,' or 'groundless.'" (*Id.*) It is difficult to find any daylight between an objectively baseless theory and one that is "unjustified" or "wholly unjustified."

Moreover, contrary to the United States' assertion, 35 U.S.C. § 273(f), does not support a laxer standard, but rather confirms that objective baselessness is necessary under § 285. Section 273(f) states in pertinent part that "[i]f the defense under this section is pleaded by a person ... who subsequently fails to demonstrate a reasonable basis for asserting the defense, the court shall find the case exceptional for the purpose of awarding attorney fees under section 285." *Id.* § 273(f). The United States contends that this language confirms that a case can be exceptional "merely because the losing party's litigating position was without a 'reasonable basis.'" (U.S. Br. 27.) To the contrary, Congress would not have needed to direct courts to find a case exceptional in that situation unless the standard for exceptional cases in § 285 required more—*i.e.*, that cases be unjustified or objectively baseless.

4. Although Fees may be Awarded Based on Other Exceptions to the American Rule, § 285 has Independent Effect.

Octane complains that if § 285 is construed as the Federal Circuit construes it, the statute serves no purpose because, in Octane's view, courts do not need § 285 to address unjustified litigation because they have Federal Rule of Civil Procedure 11 and their inherent powers. This argument ignores the historical context of § 285 as well as the many differences between § 285 and Rule 11 and courts' inherent powers.

First, whatever the scope of Rule 11 today, Octane ignores the fact that a much different form of Rule 11 was in effect when Congress enacted § 285 in 1952.[11] In 1952, Rule 11 provided only for "appropriate disciplinary action" against an attorney, with no mention of awards of attorney fees. See Fed. R. Civ. P. 11 (1937). Rule 11 was amended in 1983 because "in practice Rule 11" as it previously existed—*i.e.*, as it existed in 1952—was "not ... effective in deterring abuses." Fed. R. Civ. P. 11, Notes of Advisory Committee on Rules—1983 Amendment (citing 6 Wright & Miller, *Federal Practice and Procedure* § 1334

---

[11] Because the original version of Rule 11 was viewed as ineffective at deterring misconduct and ambiguous as to the range of available sanctions, it was amended in 1983 to a more robust form comparable to its current text. *See* Fed. R. Civ. P. 11, Notes of Advisory Committee on Rules—1983 Amendment. Currently, Rule 11 requires that representations to a court must not be presented for any "improper purpose" and must be "warranted by existing law or by a nonfrivolous argument for extending, modifying, or reversing existing law or for establishing new law." Fed. R. Civ. P. 11(b). Violations of Rule 11 may be redressed through an award of "part or all of the reasonable attorney's fees and other expenses directly resulting from the violation."

(1971)). The prior version of Rule 11 was viewed as ineffective because "the only proper inquiry was the subjective belief of the attorney at the time the pleading was signed." *Eastway Constr. Corp.* v. *City of N.Y.*, 762 F.2d 243, 253 (2d Cir. 1985). And this standard was subject to abuse because there was no requirement for a "reasonable inquiry" into the grounds for the filing. That changed in 1983, with attorneys now required to make a reasonable inquiry into the grounds for the filings they sign. Fed. R. Civ. P. 11 (1983).

Even today, the scope of Rule 11 is far different than that of § 285. Rule 11 is directed at particular, non-discovery-related filings with the court, not at the conduct of litigation in general, and in cases in which a party is represented by counsel, it largely focuses on, and provides for sanctions against, the attorney rather than the client. See Fed. R. Civ. P. 11(b), (c)(5); *Kirk Capital Corp.* v. *Bailey*, 16 F.3d 1485, 1492 (8th Cir. 1994) (sanctions against client inappropriate for attorney misconduct); *Friesing* v. *Vandergrift*, 126 F.R.D. 527, 529 (S.D. Tex. 1989) (for sanctions against a party, as opposed to an attorney, party misconduct required); *Moore* v. *W. Sur. Co.*, 140 F.R.D. 340, 345 (N.D. Miss. 1991) (same), *aff'd*, 977 F.2d 578 (5th Cir. 1992). The rule also provides specific procedures that must be followed by a party seeking sanctions and a court imposing sanctions. [12] None of that applies to § 285.

Second, the courts' inherent power to sanction parties provides no ground to disturb the long-established bases for an exceptional case determina-

---

[12] For example, Rule 11 requires that the moving party provide a "safe harbor" period for correction of the alleged violation—an exceptional case finding requires no such "safe harbor."

tion under § 285. As the Court in *Chambers*, explained, courts should ordinarily resort to statutes or rules before invoking their inherent powers. 501 U.S. at 49–50. Moreover, the Court in *Chambers* saw no difficulty when inherent powers and rule- or statute-based sanctions overlap. Indeed, there was considerable overlap between the inherent powers sanction affirmed in *Chambers* and those available by rule or statute. Moreover, although bad faith misconduct or bad faith in bringing a baseless lawsuit can warrant an exceptional case finding, exceptional cases under § 285 also include cases in which no bad faith is shown, for example, Rule 11 violations, similar misconduct, or even unprofessional behavior. See *Taltech Ltd.* v. *Esquel Enters. Ltd.*, 604 F.3d 1324, 1329 (Fed. Cir. 2010) ("'Litigation misconduct and unprofessional behavior are relevant to the award of attorney fees, and may suffice to make a case exceptional.'") (quoting *Sensonics, Inc.* v. *Aerosonic Corp.*, 81 F.3d 1566, 1574 (Fed. Cir. 1996)). Thus, "not every case that qualifies as exceptional under § 285 will also qualify for sanctions under the court's inherent power." *MarcTec, LLC* v. *Johnson & Johnson*, 664 F.3d 907, 921 (Fed. Cir. 2012).

"Exceptional cases" are those involving misconduct or wrongdoing, whether or not the misconduct or wrongdoing violates Rule 11 or would warrant sanctions under the courts' inherent powers. Moreover, even if, contrary to fact, all inappropriate conduct in patent cases were punishable under Rule 11 or the courts' inherent powers, "exceptional cases" under § 285 still should not be extended to cases in which there has been no misconduct. The exercise of the right to petition and zealously advocacy should not be equated with and put on the same level as inappro-

priate misconduct or wrongdoing unless they are a sham.

5. Application of § 285 is Party Neutral

The Federal Circuit has repeatedly emphasized that the standards applicable under § 285 are the same for prevailing plaintiffs as for prevailing defendants. See *Eltech Sys. Corp.* v. *PPG Indus., Inc.*, 903 F.2d 805, 810–11 (Fed. Cir. 1990) ("[T]here is and should be no difference in the standards applicable to patentees and infringers who engage in bad faith litigation."); see also *Kilopass Tech., Inc.*, 2013 WL 6800885, at *7. Octane erroneously argues that they are different.

Octane's argument starts from the mistaken premise that the only way that a prevailing defendant can recover fees under the Federal Circuit's interpretation of § 285 is by showing that the patentee's case was objectively baseless and brought in bad faith. In reality, a prevailing defendant can establish that a case was exceptional by showing fraud or inequitable conduct in procuring the patent, misconduct during the litigation, conduct that violated Rule 11, or other similar infractions, wholly apart from whether the patentee's infringement claim was objectively baseless or brought in bad faith. See *Brooks Furniture*, 393 F.3d at 1381. Octane does not even suggest that it is easier for a patent owner than for an accused infringer to establish litigation misconduct, Rule 11 violations, or similar infractions.

Octane does suggest that it is easier for a plaintiff patent owner to establish willful infringement than it is for a defendant accused infringer to establish that a plaintiff's infringement claim was baseless and pursued in bad faith. Even if Octane were correct about this, the fact that there was not a perfect correspond-

ence between these two different avenues for establishing that a case was exceptional would hardly show that § 285 is not applied even-handedly.[13] And Octane is not correct. As the Federal Circuit has explained:

> The objective baselessness standard for enhanced damages and attorney's fees against a non-prevailing plaintiff under *Brooks Furniture* is identical to the objective recklessness standard for enhanced damages and attorney's fees against an accused infringer for § 284 willful infringement....

iLOR, LLC v. *Google, Inc.*, 631 F.3d 1372, 1377 (Fed. Cir. 2011); see also, *e.g.*, *Eltech Sys.*, 903 F.2d at 811 ("[T]here ... should be no difference in the standards applicable to patentees and infringers who engage in bad faith litigation."). The Federal Circuit recently reiterated that willful patent infringement includes subjective and objective components that are the same as those under *Brooks*. See *Bard Peripheral Vascular, Inc.* v. *W.L. Gore & Assocs., Inc.*, 682 F.3d 1003, 1007–08 (Fed. Cir. 2012) (discussing application of *PRE* to willful infringement), *cert. denied*, 133 S. Ct. 932 (2013).

Indeed, as the Federal Circuit explains in *Bard* willful infringement is essentially reverse "sham" litigation. Defendants, like patentees, have a constitutional right to present and zealously advocate their case. *Sosa*, 437 F.3d at 933 (right to petition includes

---

[13] While certain categories of misconduct, like inequitable conduct, might apply only to patentees, other categories, like willful infringement, apply only to defendants. The existence of these different categories for patentees and accused infringers in no way diminishes the party-neutrality of § 285 or its application by the Federal Circuit.

"'a complaint, an answer, a counterclaim and other assorted documents and pleadings, in which plaintiffs or defendants ... support their request that the court do or not do something.'"). In either instance, a party's exercise of its right to petition the government should not be penalized, whether by enhanced damages, an award of attorney fees, or both, unless the party's petition—its claim or defense—was nothing but a sham—that is, no "'reasonable litigant could realistically expect, those [claims or] defenses to succeed" and subjectively the party acted with a culpable mental state. *Bard*, 682 F.3d at 1008.

The disparate treatment of patent owners and accused infringers that Octane bemoans simply does not exist. Litigation misconduct, including Rule 11 violations, vexatious litigation, and the like apply equally to plaintiffs and defendants alike. Where an exceptional case finding rests on a party's pursuit of allegedly unjustified positions—whether affirmative claims or infringement defenses—the same standard applies, as it must given the fundamental rights at stake.

II. OTHER INTELLECTUAL PROPERTY FEE-SHIFTING STATUTES DO NOT JUSTIFY OCTANE'S PROPOSED EXPANSION OF § 285.

Octane and its *amici* rely on various fee-shifting provisions in other intellectual property statutes in their attempt to expand the long-established standards for exceptional cases under § 285. Their arguments are unavailing.

A. The Copyright Act's Fee-Shifting Provision is Distinguishable from § 285.

The Copyright Act provides that in addition to regular costs, "the court may also award a reasonable

attorney's fee to the prevailing party as part of the costs." 17 U.S.C. § 505. Notably absent from this provision is the phrase "in exceptional cases," which limits court discretion to award attorney fees under § 285. Indeed, this Court has recognized this textual distinction, noting that § 285 contains "the added proviso that fees are only to be awarded in 'exceptional cases.'" *Fogerty*, 510 U.S. at 525 n.12.

In *Fogerty*, this Court stated that § 505 of the Copyright Act did not require awards of attorney fees to prevailing parties. *Id* at 533 ("The word 'may' clearly connotes discretion."). Nevertheless, courts are free to exercise their discretion to award fees in all copyright cases. *Id.* at 534. The Court observed that patent and trademark law include fee-shifting provisions that support a party-neutral approach. *Id.* at 525 n.12. But the Court went on to observe that party-neutral application of § 285 was shown specifically in exceptional patent and trademark cases involving bad faith litigation. *Id.* (citing *Eltrech Sys. Corp.* v. *PPG Indus., Inc.*, 903 F.2d 805, 811 (Fed. Cir. 1990; *Motown Prods., Inc.* v. *Cacomm, Inc.*, 849 F.2d 781, 786 (2d Cir. 1988)).

Fogerty explicitly recognized that, in contrast to § 505 of the Copyright Act, bad faith or at least wrongful conduct is a condition precedent to the exercise of court discretion to award fees under § 285. Octane's argument that this Court's interpretation of the Copyright Act mandates court discretion to award fees in all patent cases does not follow in light of the different text and recognized distinction between the two statutes.

B. Cases Interpreting The Lanham Act's Fee-Shifting Provision Do Not Dictate the Meaning of § 285.

The Lanham Act includes a provision textually identical to § 285 of the Patent Act. See 15 U.S.C § 1117(a). For this reason, Octane argues that court interpretations of § 1117 of the Lanham Act should control the meaning of § 285. The problem with that argument is that it begs the question *which* interpretation should govern? Octane says that there is "consensus" on the meaning of § 1117, but the lower courts have disagreed, noting the "surprising lack of agreement among the federal courts of appeals concerning [the meaning of exceptional cases]." *Nightingale Home Healthcare, Inc.* v. *Anodyne Therapy, LLC*, 626 F.3d 958, 960 (7th Cir. 2010) (Posner, J.).

Another problem with Octane's argument is that the attorney fees provision in § 1117 of the Lanham Act was adopted in 1975, more than 20 years after the passage of § 285. See Pub. L. No. 93-600, § 3, 88 Stat. 1955, 1955 (1975). Octane notes that "[i]n enacting [the Lanham Act fee provision] Congress explicitly referenced § 285," but fails to mention that the "referenc[e]" was merely that Congress noted that attorney fees were available under "patent law and ... copyright law" and not trademark law. S. Rep. No. 93-1400 (1974), *as reprinted in* 1974 U.S.C.C.A.N. 7132, 7133. And, critically, Congress said nothing when adopting § 1117 that is remotely similar to its explanation when amending § 285, that the phrase "exceptional cases" was meant to incorporate the case law interpreting the prior statute.

Nor does any other aspect of the legislative history of the Lanham Act's attorney fees provision support Octane's position concerning the standard under § 285. To the contrary, the Lanham Act's legislative

history indicates that its fee provision, like § 285, limited court discretion to award attorney fees in trademark cases to exceptional cases. *Id.* at 7136 ("The proposed amendment would limit attorney fees to 'exceptional cases' and the award of attorney fees would be within the discretion of the court."); see also *Burger King Corp.* v. *Pilgrim's Pride Corp.*, 15 F.3d 166, 169 (11th Cir. 1994) (explaining that award of attorney fees implied predicate finding of exceptionality). Congress also noted that "exceptional cases" would involve malicious, fraudulent, deliberate, or willful misconduct. S. Rep. No. 93-1400, 1974 U.S.C.C.A.N. at 7133 (listing types of exceptional cases). With respect to prevailing defendants in trademark cases under the Lanham Act, the legislative history makes clear that "exceptional cases" are grounded in "unfounded suits brought by trademark owners for harassment and the like." *Id.* at 7136. Thus, to the extent that the adoption of the Lanham Act fee provision many years after the adoption of § 285 is of any relevance here, it confirms that the Federal Circuit's exceptional case standard is consistent with congressional intent.

Octane's arguments about inconsistencies between the interpretations and applications of § 1117 and § 285 also suffer from a more fundamental flaw—they are premised on Octane's incorrect belief that the objectively baseless and bad faith test in *Brooks* is the exclusive test. The exceptional cases Octane cites under § 285 and under § 1117 in fact share a common theme—misconduct on the part of the losing party.

Octane cites extensively to *Noxell Corp.* v. *Firehouse No. 1 Bar-B-Que Restaurant* as one instance in which a court interpreting the Lanham Act did not employ a *Brooks*-type test to find a case exceptional. *Noxell* addressed whether § 1117 required bad faith

before courts could exercise their discretion to award attorney fees. 771 F.2d 521, 526 (D.C. Cir. 1985). The *Noxell* court reasoned that a showing of bad faith was not absolutely required for all exceptional trademark cases because courts already had inherent powers to award attorney fees for bad faith litigation. *Id.* The court further noted the inconclusive legislative history of § 1117. *Id.*[14] Notably, the majority did not rely on any legislative history or judicial interpretation of the patent fee provision in § 285.

Despite this discussion in *Noxell*, the court ultimately found that the plaintiff's litigation misconduct was harassing, found the case exceptional, and allowed an award of attorney fees. *Id.* at 527. In doing so, the court considered specific instances of misconduct by the losing plaintiff, including the filing of an extra and unauthorized brief that failed to cite the controlling law and that was "groundless" and "wholly unworthy," "unsupported by 'even a wisp' of tenable argument." *Id.* at 523, 527. In other words, the ultimate decision in *Noxell* rested on the fact that the plaintiff's arguments were baseless. And, although the court did not expressly require a finding that the plaintiff had acted in bad faith, it made a point of noting that the plaintiff's conduct did not reflect "mere 'carelessness,' a 'lapse,' or 'blunders,'" *id.* at 524 n.1; while the court did "not know what motive occa-

---

[14] This is in contrast to Congress's intent in § 285 to codify "the intention of the old statute ... *as interpreted by the courts.*" Federico, *supra*, at 216 (emphasis added). And, as explained previously, courts interpreted § 70 of the 1946 statute as limiting court discretion to award attorney fees except in "situations involving vexatious and unjustified litigation." *Am. Chain & Cable Co.*, 199 F.2d at 330; *Laufenberg*, 187 F.2d at 825 ("statute should be invoked only where vexatious or unjustified litigation is shown").

sioned" this conduct, "'none that is laudable comes readily to mind,'" *id.* at 527 (alterations omitted).

Thus, *Noxell* grounded its exceptional case finding in specific instances of misconduct and inferred a culpable, or at least less than "laudable," state of mind from the totality of the misconduct. This approach directly parallels the approach to bad faith under § 285. *Kilopass Tech., Inc.*, 2013 WL 6800885, at *8–9 ("Our case law has long held that, in considering a party's subjective state of mind, we are to take into account the totality of the circumstances.") (internal quotations omitted).

As is true under § 285, "exceptional cases" under the Lanham Act are grounded in misconduct by the losing party—indeed, some courts require predicate showing of bad faith for all exceptional cases. *Patsy's Brand, Inc.* v. *I.O.B. Realty, Inc.*, 317 F.3d 209, 221–22 (2d Cir. 2003) (limiting "exceptional cases" to fraud, bad faith, or willful trademark infringement); *Procter & Gamble Co.* v. *Amway Corp.*, 280 F.3d 519, 527–28 (5th Cir. 2002) (finding of bad faith of losing plaintiff required for "exceptional cases"); *Lipscher* v. *LRP Publ'ns, Inc.*, 266 F.3d 1305, 1320 (11th Cir. 2001) (noting fraud or bad faith required on the part of losing plaintiff). Under both the Lanham Act and the Patent Act, courts do not and should not label as wrongful a party's exercise of its right to petition and advocate its case.

III. THE CURRENT DEBATE REGARDING "PATENT TROLLS" CANNOT AFFECT THE PROPER INTERPRETATION OF § 285.

Octane's arguments attempt to recast the facts of this case as involving a "patent troll," in an obvious attempt to tap into the almost universal ire with respect to unjustified patent troll litigation. To that

end Octane—and many of its *amici*—ask the Court to interpret § 285 in light of the present policy concern over patent trolls.

But while this may be a valid policy concern, the Court has repeatedly declined to ""substitute [its] view of ... policy for the legislation which has been passed by Congress."" *Fla. Dep't of Revenue* v. *Piccadilly Cafeterias, Inc.*, 554 U.S. 33, 52 (2008) (omission in original). The Court is "not at liberty to rewrite the statute to reflect a meaning [it] deem[s] more desirable." *Ali* v. *Fed. Bureau of Prisons*, 552 U.S. 214, 228 (2008); see also *Barnhart* v. *Sigmon Coal Co.*, 534 U.S. 438, 462 (2002).[15]

Congress enacted § 285 to permit attorney fee awards in exceptional cases, which it understood though prior judicial interpretation to be cases involving willful patent infringement, fraud or inequitable conduct in procuring the patent, or vexatious or unjustified litigation. *Phillips Petroleum Co.*, 91 F. Supp. at 217; *Park-in-Theaters*, 190 F.2d at 142; *Am. Chain & Cable Co.*, 199 F.2d at 330. Nothing in the text or history of the statute suggests that a different approach should be adopted because of the subsequent emergence of patent trolls.

Moreover, just as is true of other parties, patent trolls that engage in misconduct are held responsible

---

[15] The wisdom of this rule is particularly evident here, where recent studies have questioned whether a patent litigation crisis exists at all and whether, if a crisis exists, so-called patent trolls are the cause. *See* David J. Kappos, *Facts Show Patent Trolls Not Behind Rise In Suits*, Law360 (Jan. 15, 2014), http://www.law360.com/ip/articles/501142?utm_source=shared-articles&utm_medium=email&utm_campaign=shared-articles. This type of basic dispute about whether a problem exists, and what its cause may be, underscores why these types of policy issues are matters of legislative—not judicial—attention.

for attorney fee awards under § 285. See, *e.g.*, *Taurus IP, LLC* v. *DaimlerChrysler Corp.*, 726 F.3d 1306 (Fed. Cir. 2013) (upholding fee award for baseless litigation and implicit bad faith); *Eon-Net LP* v. *Flagstar Bancorp*, 653 F.3d 1314 (Fed. Cir. 2011) (upholding fee award and exceptional case finding based on litigation misconduct and baseless litigation in bad faith), *cert. denied sub nom.* 132 S. Ct. 2391 (2012).[16]

All patentees have a First Amendment right to petition the government for enforcement of their patent rights, whether or not they practice their patents. Absent misconduct, the exercise of that right should not be found wrongful in order to justify the award of attorney fees unless it is a sham. If Congress wants to craft a different rule for trolls or other non-practicing entities, it of course may attempt to do so.[17] But the Court should not do it for Congress.

IV. THE APPLICABLE STANDARD OF PROOF IS NOT PROPERLY BEFORE THE COURT.

Octane and various *amici* criticize the clear and convincing standard of proof that applies to exceptional case determinations under § 285. Before filing its brief on the merits, however, Octane did not raise any issue with respect to the applicable standard or

---

[16] Indeed, an award of attorney fees to Nintendo and against a patent troll recently resulted in Nintendo acquiring the patent troll's patent portfolio. *See* Ryan Davis, *After Legal Win, Nintendo Buys Patents of Failed "Troll,"* Law 360 (Jan. 10, 2014), http://www.law360.com/ip/articles/500282?utm_source=shared-articles&utm_medium=email&utm_campaign=shared-articles.

[17] On this point, Congress has considered several legislative proposals. *See, e.g.*, H.R. 3309, 113th Cong. (2013); H.R. 845, 113th Cong. (2013). None has yet been enacted, but the most recent proposed legislation passed the House of Representatives by a large, bi-partisan majority and is expected by many to be passed by the Senate. H.R. 3309, 113th Cong. (2013).

argue for anything other than a clear and convincing evidence standard. Because this issue was "nowhere mentioned in the petition for certiorari," it is not before the Court. *Namet* v. *United States*, 373 U.S. 179, 190 (1963); see also Sup. Ct. R. 14, ¶ 1(a) ("Only the questions set out in the petition, or fairly included therein, will be considered by the Court."). Octane's failure is not surprising, for it also failed to raise the issue in the Federal Circuit and district court. (See Octane Fed. Cir. Brief; Pet. at *i*.)

Beyond its failure to preserve the issue, Octane's argument is wrong. The clear and convincing standard is rooted in the historical interpretation of § 285 predating the formation of the Federal Circuit. *Q-Panel Co.* v. *Newfield*, 482 F.2d 210, 211 (10th Cir. 1973) ("court's discretion [to award fees] is severely limited in the first instance to allowance only in 'exceptional cases.' Thus plaintiff has the double burden in this court of clearly establishing the existence of an exceptional case and the abuse of discretion by the trial court in not awarding attorney fees."); *La Maur, Inc.* v. *DeMert & Dougherty, Inc.*, 265 F. Supp. 961, 979 (N.D. Ill. 1965) ("Section 285 ... should be invoked only when vexatious and unjustified litigation is clearly shown."), *aff'd*, 1966 WL 7671 (7th Cir. Oct. 3, 1966); *Phillips Petroleum Co.*, 91 F. Supp. at 217 (noting that § 285's predecessor should be invoked only when vexatious and unjustified litigation is "clearly shown").[18] Moreover, many of the specific

---

[18] In at least some circuits, § 1117 of the Lanham Act also requires "'clear and convincing' evidence of an exceptional case." *See, e.g., Bd. of Supervisors for La. State Univ. Agric. & Mech. Coll.* v. *Smack Apparel Co.*, 550 F.3d 465, 491 (5th Cir. 2008) ("The prevailing party bears the burden of demonstrating the exceptional nature of the case by clear and convincing evidence."); *Fin. Inv. (Bermuda) Ltd.* v. *Geberit AG*, 165 F.3d 526,

bases for an exceptional case finding also require proof by clear and convincing evidence. See, *e.g.*, *Bard*, 682 F.3d at 1005–06 (clear and convincing evidence for willful infringement); *Therasense, Inc.* v. *Becton, Dickinson & Co.*, 649 F.3d 1279, 1285 (Fed. Cir. 2011) (en banc) (clear and convincing evidence for inequitable conduct); cf. *Eisemann* v. *Greene*, 204 F.3d 393, 396 (2d Cir. 2000) (per curiam) ("clear evidence" for vexatious litigation).

Thus, even if the Court were to overlook Octane's failure to preserve the issue for review, the Court should reject Octane's argument.

V. THE LOWER COURTS PROPERLY CONCLUDED THAT THIS IS NOT AN EXCEPTIONAL CASE THAT COULD QUALIFY FOR AN AWARD OF ATTORNEY FEES.

In initially moving for an exceptional case finding and for its attorney fees and costs, Octane argued that the case was vexatious, unjustified, and brought in bad faith. (J.A. 266a.) It informed the district court that "[a] number of different circumstances may support the finding of an exceptional case, including 'vexatious or unjustified litigation' or 'frivolous suit.'" *Takeda Chem. Indus., Ltd.* v. *Mylan Labs., Inc.*, 549 F.3d 1381, 1387 (Fed. Cir. 2008). (See also J.A. 266a.) And Octane also noted that courts consider the totality of the circumstances when assessing a case. *Yamanouchi Pharm. Co.* v. *Danbury Pharm. Inc.*, 231 F.3d 1339, 1347 (Fed. Cir. 2000). (See also J.A. 266a.)

Because Octane could not identify any specific misconduct by ICON—no fraud or inequitable conduct,

---

533 (7th Cir. 1998) (attorney fees available as protection against unfounded suits "in exceptional circumstances, and when proven by clear and convincing evidence").

no misconduct during litigation, no Rule 11 violations, or like infractions—the district court could not find the case exceptional on any of those grounds. (Pet. App. 19a–28a.) The court did analyze whether ICON's claims were objectively baseless and brought in bad faith, and properly rejected Octane's motion on that ground. (*Id.* at 25a, 28a.)

In particular, the district court noted that it was not unreasonable for ICON to rely on testing of Octane's products and expert opinion that they infringed. (Pet. App. 25a.) The district court said that Octane's evidence that the case was meant to be vexatious, even viewed in the light most favorable to Octane, was nothing more than "stray comments by employees with no demonstrated connection to the lawsuit." (*Id.* at 27a.)

Then, at the Federal Circuit, Octane argued that the district court erred by not finding this case exceptional and by allegedly focusing "exclusively" on the two-part test adopted by *Brooks* for cases in which no specific misconduct is found. (Octane Fed. Cir. Brief at 55–60.) Again, recognizing that the two-part *Brooks* test was not exclusive, Octane recited recent Federal Circuit law that courts could and should look to the totality of the circumstances and may find exceptionality in a wide variety of situations. (*Id.* at 52–55.)

The Federal Circuit found that the district court employed the correct legal standards to its exceptional case inquiry and did not err in its findings. (Pet. App. 17a.) Another Federal Circuit panel, composed of two out of the three judges who decided ICON's case, recently reiterated that the two-part *Brooks* test is not exclusive and never has been. *Kilopass Tech., Inc.*, 2013 WL 6800885, at *11. Accordingly, the district court judge, who lived with the case, did not find

this case exceptional under any of the grounds for an exceptional case finding, and three appellate judges with particular experience in patent cases found that the district court did not err in finding that the case was not exceptional.[19]

Even if the Court were persuaded to expand the scope of exceptional cases, the judgment should still be affirmed. Octane does not appeal the district court's factual findings or the Federal Circuit's affirmance of those findings. Therefore, if the Court modified the test articulated in *Brooks*, as Octane and some *amici* propose, to allow for an exceptional case finding based on *either* bad faith or objective baselessness, instead of requiring both, this Court should affirm the judgment because the district court's unchallenged findings found neither. And even if the Court adopted a standard requiring only unreasonable positions by a patentee, as Octane alternatively advocates, the judgment still should be affirmed because the district court found that ICON did not act unreasonably by relying on the testing and opinions from counsel and experts regarding its infringement claims. (Pet. App. 25a.)

The record of this case shows a reasonable dispute between industry competitors. The record reflects the absence of misconduct or even allegations of misconduct, directed at either party—that is, until Octane brought its motion to label the case exceptional,

---

[19] The issue in *Highmark Inc.* v. *Allcare Health Management Systems, Inc.* (U.S. No. 12-1163) regarding the applicable standard of review is irrelevant to this case. The Federal Circuit's decision here did not turn on the standard of review. The court stated only that it "reviewed the record and conclude[d] that the [district] court did not err." (Pet. App. 17a.) The determination of the district court would be sustained under either a deferential or more searching standard given the record in this case.

vexatious, and baseless. In its motion, Octane overlooked the fact that it was sufficiently worried that its products could infringe ICON's '710 patent that it obtained multiple opinions regarding infringement in addition to an infringement insurance policy. While accusing ICON of baseless assertions, Octane also overlooked that it had admitted to key portions of those "baseless assertions" for much of the case. This case is simply not "exceptional" under any standard.

CONCLUSION

For the forgoing reasons, the Court should affirm the lower courts' determination that this is not an exceptional case that could warrant an award of attorney fees.

Respectfully submitted,

CARTER G. PHILLIPS
RYAN C. MORRIS
SIDLEY AUSTIN LLP
1501 K Street, NW
Washington, DC 20005
(202) 736-8000
cphillips@sidley.com

CONSTANTINE L. TRELA, JR.
Sidley Austin LLP
One South Dearborn St.
Chicago, IL 60603
(612) 853-7000
ctrela@sidley.com

LARRY R. LAYCOCK *
DAVID R. WRIGHT
JARED J. BRAITHWAITE
MASCHOFF BRENNAN
LAYCOCK GILMORE
ISRAELSEN & WRIGHT
201 S. Main Street
Suite 600
Salt Lake City, UT
84111
(435) 252-1360
llaycock@mabr.com

Counsel for ICON Health & Fitness, Inc.

* Counsel of Record

January 17, 2014

REPLY BRIEF

RECORD AND BRIEFS

No. 12-1184

Supreme Court, U.S.
FILED
FEB 18 2014
OFFICE OF THE CLERK

IN THE

Supreme Court of the United States

OCTANE FITNESS, LLC,

Petitioner,

v.

ICON HEALTH & FITNESS, INC.,

Respondent.

ON WRIT OF CERTIORARI TO THE UNITED STATES COURT OF APPEALS FOR THE FEDERAL CIRCUIT

REPLY BRIEF

RUDOLPH A. TELSCHER, JR.
Counsel of Record
KARA R. FUSSNER
STEVEN E. HOLTSHOUSER
DAISY MANNING
HARNESS, DICKEY & PIERCE, PLC
7700 Bonhomme Avenue, Suite 400
St. Louis, MO 63105
(314) 726-7500
rtelscher@hdp.com

Attorneys for Petitioner

251666

COUNSEL PRESS
(800) 274-3321 • (800) 359-6859

Library of Congress
Law Library

CORPORATE DISCLOSURE STATEMENT

The Rule 29.6 statement included in Octane's opening brief remains correct.

TABLE OF CONTENTS

Page

CORPORATE DISCLOSURE STATEMENT i

TABLE OF CONTENTS ii

TABLE OF CITED AUTHORITIES iv

INTRODUCTION 1

ARGUMENT 3

I. The Equitable Discretion Test Appropriately Channels Discretion Without Requiring "Objective Baselessness." 3

II. Neither The First Amendment Nor The Purposes of §285 Require Sham Litigation 10

A. The First Amendment Is Not Offended By Fee Shifting In the Absence Of Sham Litigation 10

B. Section 285 Does Not Require Bad Faith 11

C. Section 273(f) Does Not Mandate A Strict Test 14

D. Neither the Presumption of Good Faith Nor the Clear and Convincing Standard of Proof Are Valid Appendages to §285 14

Table of Contents

Page

III. Congress Used "Exceptional" To Clarify The Intention of §70 That Discretion Be Exercised To Prevent Gross Injustice Such That Fee Awards Not Be Common. 17

CONCLUSION 22

TABLE OF CITED AUTHORITIES

Page

Cases

Aeration Processes, Inc. v. Walter Kidde & Co.,
177 F.2d 772 (2d Cir. 1949) 20

Am. Chain & Cable Co. v. Rochester Ropes, Inc.,
199 F.2d 325 (4th Cir. 1952) 17

BE&K Constr. Co. v. N.L.R.B.,
536 U.S. 516 (2002) 1, 11

Bilski v. Kappos,
130 S. Ct. 3218 (2010) 14, 22

Blanc v. Spartan Tool Co.,
168 F.2d 296 (7th Cir. 1948) 20

Blanc v. Spartan Tool Co.,
178 F.2d 104 (7th Cir. 1949) 20

Brooks Furniture Mfg. v. Dutailier Int'l, Inc.,
393 F.3d 1378 (Fed. Cir. 2005) ..... *passim*

Christiansburg Garmet Co. v. EEOC,
434 U.S. 412 (1978) 12

eBay, Inc. v. Mercexchange, LLC,
547 U.S. 388 (2006) 3

Fogerty v. Fantasy, Inc.,
510 U.S. 517 (1994) ..... *passim*

Cited Authorities

Page

Gen. Motors Corp. v. Devex Corp.,
461 U.S. 648 (1983) 8, 9, 21

Global-Tech Appliances, Inc. v. SEB S.A.,
131 S. Ct. 2060 (2011) 6

Grogan v. Garner,
498 U.S. 279 (1991) 16

Gross v. FBL Fin. Serv.,
557 U.S. 167 (2009) 15

Hall v. Keller,
81 F. Supp. 835 (W.D. La. 1949), *modified by*
180 F.2d 753 (5th Cir. 1950) 6, 20

Herman & MacLean v. Huddleston,
459 U.S. 375 (1983) 16

Indep. Fed. of Flight Attendants v. Zipes,
491 U.S. 754 (1989) 9

Kilopass Tech., Inc. v. Sidense Corp.,
738 F.3d 1302 (Fed. Cir. 2013) 2, 12, 15, 18

Laufenberg v. Goldblatt,
187 F.2d 823 (7th Cir. 1951) 18, 19

Lorillard v. Pons,
434 U.S. 575 (1978) 21

Cited Authorities

Page

Martin v. Franklin Cap. Corp.,
546 U.S. 132 (2005).....9, 13

Medtronic v. Mirowski Family Ventures, LLC,
134 S. Ct. 843 (2014).....9

Microsoft Corp. v. i4i Ltd. P'ship,
131 S. Ct. 2238 (2011).....16

National Brass Co. v. Michigan Hardware Co.,
75 F. Supp. 140 (W.D. Mi. 1948) 5-6, 19

Newman v. Piggie Park Enters.,
390 U.S. 400 (1968).....13

Orrison v. C. Hoffberger Co.,
190 F.2d 787 (4th Cir. 1951).....19

Park-In-Theatres, Inc. v. Perkins,
190 F.2d 137 (9th Cir. 1951).....18, 19, 20

Pharmacia & Upjohn Co. v. Mylan Pharm., Inc.,
182 F.3d 1356 (Fed. Cir. 1999) 17

Phillips Petroleum Co. v. Esso Standard Oil Co.,
91 F. Supp. 215 (D. Md.), *aff'd by* 185 F.2d 672
4th Cir. 1950).....20

Pierce v. Underwood,
487 U.S. 552 (1988)..... 8, 12, 20, 21

Cited Authorities

Page

Piper Aircraft Co. v. Reyno,
454 U.S. 235 (1981) 15

Pope Mfg. Co. v. Gormully,
144 U.S. 224 (1892) 9

Premier Elec. Constr. Co. v. Nat'l Elec. Contractors Ass'n, Inc.,
814 F.2d 358 (7th Cir. 1987) 11

Prof'l Real Estate Investors v. Columbia Pictures Indus.,
508 U.S. 49 (1993) 1, 11, 17, 18

Rhode Island v. Innis,
446 U.S. 291 (1980), *amended by*
456 U.S. 942 (1982) 6

Ricci v. DeStefano,
557 U.S. 557 (2009) 6

Sec. and Exchange Comm. v. C.M. Joiner Leasing Corp.,
320 U.S. 344 (1943) 8

Union Nat. Bank Of Youngstown, Ohio v. Superior Steel Corp.,
9 F.R.D. 117 (W.D. Pa. 1949) 19

Cited Authorities

Page

Statutes

15 U.S.C. §1051, *et seq.* 8

17 U.S.C. §101, *et seq.*. 3, 13

35 U.S.C. §1, *et seq.* ..... *passim*

35 U.S.C. §70 ..... *passim*

35 U.S.C. §273(f) 14

35 U.S.C. §282 16

35 U.S.C. §284 8

35 U.S.C. §285 ..... *passim*

U.S. Const. amend. I 10, 11

Other Authorities

FED. R. CIV. P. 11 .....7, 11

P.J. Federico, *Commentary on the New Patent Act*, 75 J. Pat. & Trademark Off. Soc'y 161 (1993).....21

Patent Law Codifications and Revisions: Hearings Before Subcomm. No. 3 of the H. Comm. on the Judiciary, 82nd Cong. 109 (1951).....7

Cited Authorities

Page

S. Rep. No. 79-1503 (2d Sess. 1946), *reprinted in* 1946 U.S. Code Cong. Serv. 1386 9

S.Rep. No. 82-1979 (2d Sess. 1952), *reprinted in* 1952 U.S.C.C.A.N. 2394 21

SUP. CT. R. 14 15

SUP. CT. R. 24 15

INTRODUCTION

The flawed premise of Icon's position is that Congress did not intend "exceptional" in §285 to have its plain meaning–uncommon. Instead, Icon argues "exceptional" is code for the requirement that, absent misconduct, fees may be awarded *only* in cases of sham litigation, i.e., bad faith ***and*** objectively baseless (zero merit) cases. For this worst-of-the-worst standard, Icon refers to cases decided between 1946 and 1952 and incorrectly asserts that they permitted fee awards "*if, and only if*, the court found that the suit was vexatious *and* unjustified." Icon Br. at 1-2 (emphasis added). Out of myriad words used in the 1946-52 cases, Icon contends Congress "codified" those particular words and then makes the further leap that those words mean bad faith and objective baselessness. Icon's tortured logic finds no support in §285, its legislative history, or the relevant case law interpreting it.

Icon further argues that any other interpretation of §285 is *unconstitutional* in view of *Prof'l Real Estate Investors v. Columbia Pictures Indus.*, 508 U.S. 49 (1993). Icon Br. at 21-22. This position was rejected in *BE&K Constr. Co. v. N.L.R.B.*, 536 U.S. 516 (2002), and, if correct, would mean that fee statutes must incorporate *PRE*'s sham litigation standard to pass constitutional muster. Icon's positions are meritless.

The 1946 legislative history of §70 made clear that discretion should be exercised so that fees would not be awarded ordinarily, but would be awarded to prevent gross injustice. As the United States has explained, the cases decided between 1946 and 1952 were true to these objectives. *See* U.S. Br. at 10-14. In 1952, Congress added the word "exceptional" to align the text with the

legislative history of §70, and the cases interpreting it. Congress intended fee awards to be uncommon, the result of discretion, based on consideration of the totality of the circumstances, and to prevent gross injustice to the prevailing party consistent with the purposes of the Patent Act. *Id.*

Congress did not intend fee shifting to be the result of bright-line, *per se* tests. Octane's position, termed the "equitable discretion" test, is supported by several score of diverse amici, the United States and Chief Judge Rader of the Federal Circuit. *See Kilopass Tech., Inc. v. Sidense Corp.*, 738 F.3d 1302, 1318-20 (Fed. Cir. 2013) (Rader, C.J., concurring) (advocating "*return* to the rule that a district court may shift fees when, based on a totality of the circumstances it is necessary to prevent gross injustice") (emphasis added).

This case underscores why the amici are incensed and why the current strict standard fails to prevent gross injustice as Congress intended and, in fact, encourages it. *See, e.g.*, Elect. Frontier Found. Br. at 4 & 8. Icon took a worthless patent on a simple, but unviable invention, construed its claims irrationally, and instituted abusive patent litigation to extract money from Octane, a start-up competitor selling a highly successful and visibly different elliptical machine licensed under a different patent. Octane Br. at 2-3, 8, & 51. In order to assert that Icon's worthless patent covered Octane's machines, Icon contended "stroke rail" meant a limitless number of parts, "linear" meant curved, and "c-channel" meant virtually any part. *Id.* at 51-53. Icon's position was nonsensical and unreasonable, and it pegged the meter for an "uncommon" case causing gross injustice to Octane.

Constrained by *Brooks*, however, the district court ignored undisputed evidence, and even explained away damning email evidence as "stray" comments, despite the lack of record evidence to support that interpretation. Pet. App. at 26a-27a. The compartmentalized, high-threshold test did not allow consideration of all circumstances in equity.

Affirming would teach that the weakest of claims are *immune* from fee awards and embolden abusive, extortionate patent suits that weaken the patent system. On this undisputed record, reversal and remand with an order to determine the appropriate *amount* of fees is appropriate. This Court's application of the correct standard would benefit future courts.

ARGUMENT

I. The Equitable Discretion Test Appropriately Channels Discretion Without Requiring "Objective Baselessness."

The equitable discretion test is not "unfettered" and will not result in "a virtually automatic award" of fees in every case. *See* Icon Br. at 27.[1] As Octane explained in its opening brief, the "exceptional case" requirement prohibits courts from awarding fees "in the normal course," while preserving their discretion to do so when equitable considerations warrant an "exception." Octane Br. at 20. The sky will not fall if §285 means what it says. Under the Lanham Act, fee awards have never been

1. As support, Icon cites the "pre-*eBay* experience." The logic is flawed, because the "pre-*eBay* experience" resulted from a judicially-created *presumption*, not the exercise of discretion. *See eBay, Inc. v. Mercexchange, LLC*, 547 U.S. 388 (2006)

the norm, despite the fact that not a single court has interpreted its identical fee-shifting provision to require sham litigation. *See id.* at 29-34. History teaches that district courts are both uniquely qualified and capable of applying the equitable discretion test and preventing gross injustice without precise prerequisites, similar to equitable judgment calls they make every day.

When considering a fee award under §285, district courts should be able to take into account the *degree* to which an argument is weak or unreasonable—in consideration with other factors—even if the argument is not completely frivolous. Nothing in the text, history, or purpose of §285 prohibits a court from considering the weakness of a party's claim unless that claim is "objectively baseless."

The district court decision here illustrates the flaws of the Federal Circuit's restrictive approach: the court denied fees because Icon's individual arguments on claim construction and infringement were deemed not "frivolous," i.e., they were not as low as zero merit. Pet. App. at 19a-28a (using the word "frivolous" four times). Because Icon mustered *an* argument, the district court did not consider *how* unreasonable any argument was or the reasonableness of the case as a whole. This myopic analysis provides an excellent example that, in practice, "objective baselessness" devolves into a search for a single argument that at least gives the appearance of rising above zero merit. This approach is problematic for several reasons.

First, an "on/off" assessment of individual components in isolation misses that the whole can be greater than the sum of the parts. To prevail, Icon had to prove the accused elliptical machines met *every* element

of at least one claim of the patent.[2] While Octane believes that each of the infringement arguments were unreasonable, the combination of weak positions made Icon's infringement position, as a whole, grossly unreasonable (*e.g.*, mathematically 20% x 20% x 20% = 0.8%). And, Icon's patent would have been invalid even had it prevailed on its unreasonable infringement positions because if Octane infringed, then Icon's patent would cover virtually all variable stride elliptical machines. *See* Pet. App. at 15a-17a (discussing crowded field of art in which the '710 patent arose).

Second, evaluating "objectively baseless" in isolation, removes merits analysis from the broader context of the litigation, thereby preventing fee awards where merits weakness, *together with other relevant considerations*, indicate gross injustice. Reasonableness should be judged within the context of the controversy as a whole. Evidence of economic coercion is particularly relevant.[3]

---

2. Icon suggests that at least one of its positions was reasonable because early in the case, before Icon added the Q45 to its infringement contentions, Octane admitted the "stroke rail" limitation (claim 1(c)). Icon Br. at 11. "Stroke rail" was an undefined word in the patent, and Octane's point was that even if you could call Octane's actuator casting a "stroke rail" (as Icon contended), that part was not connected to the frame via a c-channel, and thus did not infringe in any event. Icon had the burden of showing every limitation was met. Octane did not have to establish every way in which it did *not* infringe. But, Octane ultimately challenged even that limitation and both the district court and the Federal Circuit agreed "stroke rail" was one of *several* missing limitations. Octane Br. at 51-52.

3. Even the cost of the litigation bears on this calculus. The amount of fees involved in some cases between 1946 and 1952 was about $2,000. *National Brass Co. v. Michigan Hardware*

The cumulative weakness of Icon's assertions coupled with undisputed facts proving (a) size disparity of the parties, (b) Icon's failure to practice the patent, (c) the fact that Octane's machines were award-winning and licensed under a different patent, (d) email evidence that the litigation itself was used as an unwarranted competitive weapon, and (e) other conduct in the litigation (e.g., bringing suit in California by joining a small Octane distributor), equals gross injustice if Octane has to spend $2 million to prevail. Octane Br. at 8, 10-11, 13 & 51. The district court's focus on "frivolous" missed the unreasonableness of the case as a whole and the injustice to Octane. In view of the undisputed record, reversal is warranted. *See, e.g., Global-Tech Appliances, Inc. v. SEB S.A.*, 131 S.Ct. 2060, 2070-71 (2011) (applying new willful blindness standard to sufficiency of evidence in patent infringement case); *Ricci v. DeStefano*, 557 U.S. 557, 585-86 (2009) (applying new test under Title VII to summary judgment determination); *Rhode Island v. Innis*, 446 U.S. 291, 301-04 (1980) *amended by* 456 U.S. 942 (1982) (applying new "functional equivalent" test for interrogation under *Miranda* to facts).

Co., 75 F.Supp. 140, 141 (W.D. Mi. 1948) ($1,960); *Hall v. Keller*, 81 F.Supp. 835, 836 (W.D. La. 1949) *modified by* 180 F.2d 753 (5th Cir. 1950) ($2,500). Where the costs to defend are low, the system is predominantly self-regulating in that the accused infringer can afford to, and likely will, defend weak cases. The equation changes when the average cost to defend an infringement claim is, as it is now, approximately $2,000,000, ***a 99,900% increase*** from the early period. Litigants asserting worthless patents can leverage that cost to extract monies to which they are not entitled because when the prospect of a fee award is slim-to-none there is no incentive to defend the suit.

Third, the "objectively baseless" prong asks courts to do something counterintuitive: declare that a case that required significant time and resources to learn the invention in the context of its field, decipher the claim scope and understand the parties' respective positions as to both infringement and invalidity was, after all, frivolous and baseless. Holding courts to a frivolous standard also essentially implicates the attorneys under Rule 11, something courts are loath to do.

Excluding all but the most facially absurd and frivolous contentions collapses §285 with Rule 11 and the court's inherent authority to sanction misconduct. Octane Br. at 25-27. Icon parses perceived distinctions between Rule 11, inherent authority of courts and §285, but both Rule 11 and/or inherent authority substantially reach the range of bad faith misconduct to which Icon would limit §285. Sham litigation is the most extreme form of litigation misconduct. Inherent authority always reached it for the purpose of merely awarding attorneys' fees and if §285 reaches no further it serves no purpose.

Precise formulas, like Icon's sham test, are the antithesis of discretion.[4] Octane Br. at 19 (citing *Fogerty*,

4. Icon argues that "may" in §285 is superfluous if "exceptional" indicates discretion. Icon Br. at 24-26. Icon misunderstands the connection between discretion and "exceptional cases." In his testimony before the House, the chamber that authored §285, Chief Patent Examiner P.J. Federico could not have been clearer: "[w]hat [the phrase 'exceptional cases'] constitutes is left, and stays left to the discretion of the court." *Patent Law Codifications and Revisions: Hearings Before Subcomm. No. 3 of the H. Comm. on the Judiciary*, 82nd Cong. 109 (1951). Thus, reading §285 as a whole, "may" is not superfluous, because discretion permeates the inquiry as to whether the case is exceptional such that a fee award is warranted.

under the Copyright Act "*no precise rule or formula for making fee determinations*"). This Court explained why bright line, per se rules do not work in fee-shifting:

> "One of the 'good' reasons for conferring discretion on the trial judge is the *sheer impracticability of formulating a rule* of decision for the matter in issue. Many questions that arise in litigation are not amenable to regulation by rule because they involve *multifarious*, fleeting, special, narrow facts that utterly resist generalization—at least, for the time being. The non-amenability of the problem to rule, because of the *diffuseness* of circumstances, novelty, vagueness, or similar reasons that argue for allowing experience to develop, appears to be a sound reason for conferring discretion on the [courts]."

Pierce v. Underwood, 487 U.S. 552, 561-62 (1988) (citation omitted) (quoting Professor Rosenberg); *see also Gen. Motors Corp. v. Devex Corp.*, 461 U.S. 648, 658 (1983) (Stevens, J., concurring) (wisdom of not precisely defining standard for §284). Courts recognize the relevance of other factors in a justice calculus. Octane Br. at 33. Nothing in the text or history of passage of §285 *prevents* consideration of *any* relevant circumstance that bears on fairness and justice

Section 285 serves a higher purpose than simple restitution to a wrongfully accused infringer—the larger objectives of the patent system. In *Sec. and Exchange Comm. v. C.M. Joiner Leasing Corp.*, 320 U.S. 344, 350-51 (1943), this Court stated that statutory construction rules are "subordinated to the doctrine that courts will construe

the details of an act in conformity with its dominating general purpose, will read text in the light of context and will interpret the text so far as the meaning of the words fairly permits so as to carry out in particular cases *the generally expressed legislative policy*." (emphasis added). This is particularly true in fee statutes: "When applying fee-shifting statutes, 'we have found limits in 'the large objectives' of the relevant Act, which embrace certain 'equitable considerations.'" *Martin v. Franklin Cap. Corp.*, 546 U.S. 132, 139-40 (2005) (*quoting also Indep. Fed. of Flight Attendants v. Zipes*, 491 U.S. 754, 759 (1989)).

The goals of the Patent Act are furthered when (1) patent holders think twice before bringing weak patent claims; and (2) accused infringers have incentive to challenge the bounds of patents. Not even a month ago, the purposes of the patent system explained the result in *Medtronic v. Mirowski Family Ventures, LLC*, 134 S.Ct. 843, 851-52 (2014). This Court again noted the public's "paramount interest" in striking the balance between monopoly power and patent scope, the impropriety of overreaching a patent's boundaries to exact royalties and the importance of *incentivizing* the challenge of a patent's scope. *Id.; see also GMC*, 461 U.S. at 655-56 (Stevens, J., concurring) (valuable, not worthless, patents deserve protection (citing *Pope Mfg. Co. v. Gormully*, 144 U.S. 224, 234 (1892))). As noted in *Pope Manufacturing*, it is a public priority to provide economic incentive to challenge patents. 144 U.S. at 234; *see also* S. Rep. No. 79-1503, at 2 (2d Sess. 1946), *reprinted in* 1946 U.S. Code Cong. Serv. 1386, 1387 ("the discretion given the court . . . will discourage infringement of a patent by anyone thinking that all he would be required to pay if he loses the suit would be a royalty" and it applies to accused infringers "to prevent a gross injustice.")

II. Neither The First Amendment Nor The Purposes of §285 Require Sham Litigation.

Icon argues that Octane suffers from a "fiction" that *all* §285 awards must meet the sham test. Icon Br. at 23. What is "non-fiction" is that litigation misconduct and inequitable conduct—the only other two boxes of conduct warranting fee awards per the Federal Circuit—are very *narrow* and, in any event, both involve bad faith, which Icon misses. The catch-all category, the category in which this and by far most fee award issues arise, is governed by the sham litigation test and is therefore encouraging weak suits and allowing gross injustice to proliferate directly contrary to the intent of Congress. Litigants destroying documents or inventors committing fraud in patent applications is wrong but is not the primary source of abuse and injustice. What is left unaddressed and unremedied is the harm caused by overbroad assertion of weak patents often *coupled with* economic coercion and/or acts that raise defense costs without fitting neatly in the "litigation misconduct" slot. Neither the Constitution nor §285 require this result.

A. The First Amendment Is Not Offended By Fee Shifting In the Absence Of Sham Litigation

Absent specific "misconduct," Icon claims the First Amendment requires sham litigation for an award of fees under §285. Icon Br. at 20 n. 9 and 22.[5] If correct, no fee-

5. Inexplicably, Icon exempts the litigation misconduct and inequitable conduct boxes of the *Brooks* rule from the First Amendment. This makes no sense—neither renders the litigation itself unlawful and the burden on the right to petition is no less than in *Brooks*'s catch-all category.

shifting statute is constitutional. Fortunately, this Court already strongly indicated in *BE&K*, that fee statutes do *not* implicate the same First Amendment concerns as statutes which make it *unlawful* to bring an underlying action:

> [N]othing in our holding today should be read to question the validity of common litigation sanctions imposed by courts themselves-such as those authorized under Rule 11 of the Federal Rules of Civil Procedure-***or the validity of statutory provisions that merely authorize the imposition of attorney's fees on a losing plaintiff.***

536 U.S. at 537 (emphasis added); *see also Premier Elec. Constr. Co. v. Nat'l Elec. Contractors Ass'n, Inc.*, 814 F.2d 358, 373 (7th Cir. 1987) (holding First Amendment does not apply to fee-shifting statutes and rejecting argument that "sham" litigation is required to shift fees). Icon cites *BE&K* but ignores the above statement. This Court has already held that many fee-shifting provisions applicable to prevailing defendants do not require bad faith. *See* Octane Br. at 26; *see also Fogerty v. Fantasy, Inc.*, 510 U.S. 517, 532-33 (1994). There is no reason to have a different rule in patent cases.

B. Section 285 Does Not Require Bad Faith.

Icon argues that the Federal Circuit's use of *PRE*'s strict sham litigation test is appropriate, because "'exceptional cases' for purposes of §285 are cases involving . . . culpable conduct by a litigant." Icon Br. at 21-22. While "culpable conduct" may be involved, Congress's

focus was on preventing gross injustice *to the prevailing party*, not *penalizing wrongdoers*. Recently, the Federal Circuit reiterated that §285 "is *remedial* and for the purpose of compensating the prevailing party for the costs it incurred in the prosecution or defense of a case where it would be grossly unjust . . . to require it to bear its own costs." *Kilopass*, 738 F.3d at 1313 (emphasis added). Hence, the totality of relevant circumstances includes culpable conduct, *if* it bears a causal nexus to the harm done to the prevailing party (often the case), but it is not the exclusive focus.

For this reason, focusing on subjective bad faith is the wrong inquiry and it should not be a condition precedent to fees. Icon gives this issue short shrift, even though it is half of the sham test. Icon arbitrarily equates "bad faith" with "vexatious," one of the two terms Icon lifts from the many terms used by courts. But, even Icon admits "vexatious" means annoying or harassing (Icon Br. at 20); it is not a synonym for "subjective bad faith." *See also, Christiansburg Garmet Co. v. EEOC*, 434 U.S. 412, 422 (1978) ("'vexatious' in no way implies that . . . bad faith is a necessary prerequisite to a fee award").[6] Harassment focuses on the impact on the victim, whereas bad faith focuses on the *mens rea* of the accuser. It would also allow a patent owner to readily shield itself from fees by finding a lawyer to issue a subjective opinion pre-suit–a tactic that Icon attempted in this case without even producing the opinion. The mindset of a patentee bears little relevance to prevention of a grossly unjust result to the wrongfully

6. Icon also misconstrues the other half of its equation: "unjustified." *Pierce*, 487 U.S. at 564-66 (equating "justified" with reasonableness).

accused. This also explains why the majority of Circuits interpreting the same language in the Lanham Act do *not* require bad faith. Icon concedes those cases, but offers no explanation why patent cases deserve a different rule. Icon Br. at 36-39.

Icon relies on *Fogerty* to support a bad faith requirement in §285. Icon Br. at 35. On the contrary, *Fogerty* merely noted §285 for party-neutrality. 510 U.S. at 525 n.12. It did not, and had no reason to, prescribe conditions precedent to an award of fees under §285. *Id.*

The public policy interests at stake in defending patent suits also undermines Icon's insistence that §285 requires sham litigation to award fees. These interests were noted in Octane's Opening Brief, at 41-42, and herein, *supra* at I-B. This Court has interpreted other fee-shifting statutes in terms of whether the public policy of the overarching statutory scheme included a bias for or against fee awards. *Martin*, 546 U.S. at 136-40. The "private attorney general" doctrine was a critical factor in determining the standard for awarding fees to a plaintiff in a civil rights case, *Newman v. Piggie Park Enters.*, 390 U.S. 400, 402 (1968) ("vindicating a policy that Congress considered of the highest priority").

Although not equivalent to a civil rights violation, the benefit to the public resulting from encouraging accused infringers to challenge weak patents makes such a challenger a quasi-private attorney general. Congress struck the right balance in articulating a standard that makes fee awards uncommon, but not so rare that unscrupulous patent owners can unfairly stretch the boundaries of their rights by bringing weak patent cases without any risk of paying fees.

C. Section 273(f) Does Not Mandate A Strict Test

Responding to the United States' position, Icon argues that 35 U.S.C. §273(f) was unnecessary if §285 authorizes a fee award for anything less than sham litigation. Icon Br. at 28. That is incorrect. Section 273(f) reflects Congress's concern for abuse of a limited defense (secret prior commercial use), but it does *not* establish that reasonableness of a claim or defense could not be part of the §285 equation in other contexts. To the contrary, §273(f) reflects Congress's underlying understanding that a case *need not be* frivolous or brought in subjective bad faith in order to qualify as exceptional or justify a fee award. *See Bilski v. Kappos*, 130 S. Ct. 3218, 3228 (2010) (relying on §273(f) to clarify the meaning of a prior-enacted provision of the Patent Act). Reasonableness of the claim or defense is *always* an important consideration in determining whether a case is exceptional; Congress made it dispositive in this one instance.

D. Neither the Presumption of Good Faith Nor the Clear and Convincing Standard of Proof Are Valid Appendages to §285.

Two corollary concepts are part and parcel of the sham litigation test articulated by the Federal Circuit in *Brooks*: "[t]here is a presumption that the assertion of infringement of a duly granted patent is made in good faith," and to overcome the presumption, sham litigation must be proven by "clear and convincing evidence." *Brooks Furniture Mfg. v. Dutailier Int'l, Inc.*, 393 F.3d 1378, 1382 (Fed. Cir. 2005); *see also* Octane Br. at 22-23. A panel of the Federal Circuit recently recognized the error of both the presumption *and* the requirement for clear and

convincing evidence. *Kilopass*, 738 F.3d at 1314-15 (tracing the origins of each and concluding both were erroneously imported into the §285 analysis).

Icon ignores the presumption entirely–the phrase "good faith" does not appear even once in its brief–and argues the clear and convincing standard of proof is not before this Court. Rule 14 provides "[t]he statement of any question presented is deemed to comprise ***every subsidiary question fairly included therein.***" SUP. CT. R. 14 (emphasis added); *see also* SUP. CT. R. 24 (alternatively, the Court may consider any instance of plain error). Because the standard of proof is integral to the Federal Circuit's sham test, it is a "subsidiary question fairly included therein." SUP. CT. R. 14(1)(a); *see also Gross v. FBL Fin. Serv.*, 557 U.S. 167, 173 n.1 (2009) (holding that whether the burden of persuasion shifted was "threshold question" under Rule 14.1(a), even though the question was not expressly raised in the Question Presented section of the Petition).[7] In any event, the Court retains discretion to address "questions outside the scope" of an order of certiorari "when resolution of those questions is necessary for the proper disposition of the case." *Piper Aircraft Co.* v. *Reyno*, 454 U.S. 235, 246 n.12 (1981). The exercise of such discretion is appropriate here.

Icon claims that the clear and convincing standard is "rooted in the historical interpretation of §285 predating the formation of the Federal Circuit." *See* Icon Br. at 42.

---

7. Octane's Petition referenced the clear and convincing standard of proof as part of what makes fees unattainable for prevailing defendants under the Federal Circuit's interpretation of §285. *See* Pet. at 26.

Octane has not unearthed a *single* pre-1982 decision that addressed the burden of proof applicable to §285. The three cases Icon cites used the word "clearly" in discussing §285. But, these cases did not reflect a reasoned rejection of the preponderance of the evidence standard in favor of the clear and convincing standard. They did not even definitively indicate that a heightened standard applied, as the word "clearly" was used ubiquitously in cases of the time period.

In civil cases the preponderance of the evidence standard is generally presumed absent Congressional direction otherwise. *See Grogan v. Garner*, 498 U.S. 279, 286 (1991) (in civil cases preponderance of the evidence standard is presumed absent Congressional direction otherwise). Here, Section 285 is silent on the issue of the applicable standard of proof. *Microsoft Corp. v. i4i Ltd. P'ship*, 131 S. Ct. 2238, 2240 (2011) (clear and convincing applicable to invalidity because of statutory presumption of validity embodied in §282). There are also no "particularly important individual interests or rights" at stake that would warrant a departure from the generally applicable preponderance standard. *Herman & MacLean v. Huddleston*, 459 U.S. 375, 390 (1983) (rejecting clear and convincing in securities fraud case; higher standard appropriate for important individual interests, like terminating parental rights).

III. Congress Used "Exceptional" To Clarify The Intention of §70 That Discretion Be Exercised To Prevent Gross Injustice Such That Fee Awards Not Be Common.

Icon ignores the plain meaning of "exceptional." Instead, Icon attempts to sell the notion that "exceptional" was added to "overhaul" §70 and "codify" the "vexatious and unjustified" standard that it incorrectly asserts was embraced by the cases interpreting the 1946 fee-shifting provision between 1946 and 1952.[8] Icon then draws a correlation to *Brooks*'s requirement of bad faith and objectively baseless, even though *Brooks*, itself, did not purport to be explaining the phrase "vexatious or unjustified." The capstone flaw of Icon's logic is its assertion that the *PRE* sham test is merely a concise restatement of a standard faithfully derived from decisions interpreting §70. There can be no serious question that rather than fidelity to the past, *Brooks* was a radical change of course for the Federal Circuit compelled, in its view, by

---

8. The only circuit case Icon cites in support of its "vexatious ***and*** unjustified" theory is *Am. Chain & Cable Co. v. Rochester Ropes, Inc.*, 199 F.2d 325 (4th Cir. 1952). *See* Icon Br. at 4-5, 18, 21, 38 n.14 & 40 (citing *Am. Chain* six times). But *Am. Chain* was decided in October 1952, three months ***after*** President Truman signed the revised Patent Act into law. A far more common formulation in the 1946-1952 cases was "vexatious ***or*** unjustified." *See* Icon Br. at 4-6, 15-16, 18-19, 26, 38 n.14 & 40 (recognizing the far more common "or" formulation). The Federal Circuit itself has recognized that *Am. Chain* imposes an overly restrictive standard that does not comport with its own understanding of § 285. *See Pharmacia & Upjohn Co. v. Mylan Pharm., Inc.*, 182 F.3d 1356, 1359-60 (Fed. Cir. 1999) (reversing denial of fee award in part because district court applied an improper legal standard drawn from *Am. Chain*)."

PRE . Kilopass, 738 F.3d at 1319 (Radar, C.J., concurring) (*Brooks* "drastically altered this court's jurisprudence regarding 35 U.S.C. § 285").

The legislative history of §285 references the 1946-1952 decisions, but those cases contained diverse articulations of the standards used to guide discretion. What those decisions had in common was their recognition that (1) fees should be awarded only in unusual cases, and (2) that district courts should have broad, equitable discretion to award fees when necessary to prevent gross injustice to the prevailing party. *See generally* U.S. Br. at 10-14. As the Ninth Circuit explained in its influential and oft-cited decision in *Park-In-Theatres, Inc. v. Perkins*, 190 F.2d 137, 142 (9th Cir. 1951), §285 gave courts authority to address cases marked by "unfairness *or* bad faith in the conduct of the losing party, *or* some other equitable consideration of similar force, which makes it grossly unjust that the winner of the particular law suit should be left to bear the burden of his own counsel fees." None of the cases Congress referenced required *both* frivolousness and subjective bad faith as a requirement.[9]

---

9. Strangely, Icon repeatedly cites *Park-In-Theatres*—along with *Laufenberg v. Goldblatt*, 187 F.2d 823 (7th Cir. 1951)—in support of its "vexatious and unjustified" interpretation of the 1946-1952 cases. *See* Icon Br. at 4-5, 18, 20 38 n.14. But both cases could not be clearer that bad faith is *not* a standalone requirement for a fee award. *See Park-In-Theatres*, 190 F.2d at 142 ("unfairness *or* bad faith in the conduct of the losing party, *or* some other equitable consideration of similar force" (emphasis added)); *Laufenberg*, 187 F.2d at 825 ("vexatious *or* unjustified" (emphasis added)); *see also* U.S. Br. at 31 n.20 (citing other cases from 1946-1952 also making clear that bad faith is not independently required).

Several of the cases made it clear that equitable considerations, unreasonableness of the merits and the degree of justification for the overall suit were factors a court could consider. For example, the district court in *Park-In-Theaters* awarded fees because the case was brought on surmise and there were delay tactics, but the Court of Appeals reversed because there was no bad faith *in the sense that* there was "ample ground for a belief that the claim here in suit was sufficiently substantial to merit litigation." 190 F.2d at 142-43. Absent from the analysis was a requirement of finding both "vexatious and unjustified," much less "subjective bad faith" and "objectively baseless." Also absent was an analysis of various factors in isolation rather than as a whole.

This Court does not need to ignore the plain meaning of "exceptional," as Icon does, to conclude that Congress's use of the term was meant to sharpen focus on the dual purposes of §70—uncommon and prevent gross injustice—expressed in §70's 1946 legislative history. Specifically, the court decisions between 1946 and 1952 captured the spirit of §70. This spirit is found not in a particular term, but in the common teachings of the cases. First, gross injustice and fairness were the benchmarks and anything which bore on fairness could be considered. *See, e.g., Laufenberg,* 187 F.2d at 824-25; *Union Nat. Bank Of Youngstown, Ohio v. Superior Steel Corp.*, 9 F.R.D. 117, 119-20 (W.D. Pa. 1949) (considering pattern of coercive use of litigation to extract settlements and avoid adjudication of patents; looked at plaintiff's history of litigation); *Nat'l Brass*, 75 F.Supp. at 141-42 (considerations of equity and good conscience). Second, the fee decision was a singular exercise of discretion. *See, e.g., Orrison v. C. Hoffberger Co.*, 190 F.2d 787, 791 (4th Cir. 1951) (award of fees "lies in

the sound discretion of the trial court"); *Blanc v. Spartan Tool Co.*, 168 F.2d 296, 300 (7th Cir. 1948) (exercise of discretion "ends the matter unless . . . there was a clear abuse of discretion"); *Phillips Petroleum Co. v. Esso Standard Oil Co.*, 91 F.Supp. 215, 217-18 (D. Md.) *aff'd by* 185 F.2d 672 (4th Cir. 1950). Third and most important, the quality of the merits was highly relevant. *See, e.g., Park-In Theatres*, 190 F.2d at 142-43 ("sufficiently substantial to merit litigation"); *Aeration Processes, Inc. v. Walter Kidde & Co.*, 177 F.2d 772, 773 (2nd Cir. 1949) (claim was "quite persuasive"); *Blanc v. Spartan Tool Co.*, 178 F.2d 104, 105 (7th Cir. 1949) (award of fees to prevailing accused infringer based on totality of circumstances and where patent invalid because consisted of a combination of known elements); *Hall*, 81 F.Supp. at 836 (W.D. La. 1949) (probable cause). *See also* U.S. Br. at 10-14.

Thus, to the extent the 1946-1952 cases evaluated the justification of the claims, they never equated "unjustified" with the extreme "objectively baseless" rubric crafted decades later. In a fee-shifting statute, "unjustified" signifies an inquiry into the unreasonableness of the contentions as a whole, not a rigid requirement of frivolousness or zero merit for individual claims. *Pierce*, 487 U.S. at 564-66 (equating "justified" with reasonableness, and making clear that to be reasonable, an argument must be more than "merely undeserving of sanctions for frivolousness").

If nothing else, Icon's argument must be rejected because Congress did not clearly indicate that it intended to codify the "vexatious and unjustified" standard advocated by Icon. *See, e.g., Fogerty*, 510 U.S. at 531 ("no settled [standard] interpretation"); *Pierce*, 487 U.S. at 567 (no consistent judicial interpretation). The general thrust

and wording of the 1946-1952 cases is consistent with the meaning of "exceptional," i.e., uncommon. To the extent that Icon is suggesting that Congress had the specific intention to ratify particular words from those cases, to the exclusion of many other words used therein, this Court has rejected such attempts. *See, e.g., Pierce*, 487 U.S. at 566-67 (authoritative expression required); *compare Lorillard v. Pons*, 434 U.S. 575, 581 (1978) (Congress exhibited detailed knowledge of judicial interpretations), *with Fogerty*, 510 U.S. at 530-31 (passing reference to prior case law lacked sufficient clarity).

Finally, in *GMC*, this Court stated that §285 "was merely '*reorganization* in language [in §70] to *clarify*'" §70 and "exceptional cases" was added "*for purposes of clarification only.*" 461 U.S. at 653 n.6 & 8 (emphasis added) (quoting, 1952 legislative history). This is, of course, supported by the legislative history statement that §285 was "substantially the same" as §70. S.Rep. No. 82-1979, at 30 (2d Sess. 1952), *reprinted in* 1952 U.S.C.C.A.N. 2394, 2423. Codification of the sham litigation test is not mere "clarification" and is certainly not the "same" as the 1946 fee statute. *GMC*'s *dicta* is supported by the testimony of Chief Patent Examiner P.J. Federico that "exceptional cases" did not change any aspect of the discretion courts enjoyed under §70. P.J. Federico, *Commentary on the New Patent Act*, 75 J. Pat. & Trademark Off. Soc'y 161, 216 (1993).

In sum, there is no basis for concluding that when Congress used "exceptional," it intended to codify the strictest of tests that requires the establishment of two elements as the outer limits of a court's discretion to award fees under §285. If that is what Congress had in mind it would have said so, and the Federal Circuit erred

in rewriting the statute to impose rigid and restrictive requirements unsupported by its text or purpose. *See Bilski*, 130 S. Ct. at 3226 ("This Court has more than once cautioned that courts should not read into the patent laws limitations and conditions which the legislature has not expressed.") (quotation marks and citations omitted). Icon's view of §285's use of "exceptional" makes no sense in a remedial statute designed to prevent gross injustice and further the purposes of the patent system. It is counterintuitive to the plain meaning of the term, and it should be rejected.

CONCLUSION

For the foregoing reasons, Octane asks that this Court reverse and remand with an order to determine the *amount* of fees. Alternatively, Octane requests that this Court reverse and remand with an order to determine whether fees are warranted under Section 285, consistent with this Court's opinion.

Respectfully submitted,

RUDOLPH A. TELSCHER, JR.
Counsel of Record
KARA R. FUSSNER
STEVEN E. HOLTSHOUSER
DAISY MANNING
HARNESS, DICKEY & PIERCE, PLC
7700 Bonhomme Avenue, Suite 400
St. Louis, MO 63105
(314) 726-7500
rtelscher@hdp.com

Attorneys for Petitioner

AMICUS CURIAE BRIEF

Supreme Court, U.S.
FILED
DEC - 9 2013
OFFICE OF THE CLERK

No. 12-1184

In the Supreme Court of the United States

OCTANE FITNESS, LLC, PETITIONER

v.

ICON HEALTH & FITNESS, INC.

ON WRIT OF CERTIORARI
TO THE UNITED STATES COURT OF APPEALS
FOR THE FEDERAL CIRCUIT

BRIEF FOR THE UNITED STATES AS AMICUS CURIAE SUPPORTING PETITIONER

DONALD B. VERRILLI, JR.
Solicitor General
Counsel of Record
STUART F. DELERY
Assistant Attorney General
MALCOLM L. STEWART
Deputy Solicitor General
ROMAN MARTINEZ
Assistant to the Solicitor General
SCOTT R. MCINTOSH
MARK R. FREEMAN
Attorneys
Department of Justice
Washington, D.C. 20530-0001
SupremeCtBriefs@usdoj.gov
(202) 514-2217

NATHAN K. KELLEY
Solicitor and Deputy General Counsel
LORE A. UNT
JOSEPH MATAL
JAMIE L. SIMPSON
Associate Solicitors
United States Patent and Trademark Office
Alexandria, Va. 22313

QUESTION PRESENTED

Section 285 of the Patent Act provides that "[t]he court in exceptional cases may award reasonable attorney fees to the prevailing party." 35 U.S.C. 285. The question presented is as follows:

Whether a prevailing defendant seeking attorney's fees under Section 285 must prove, by clear and convincing evidence, that the patentee either (a) committed misconduct in the litigation or in securing the patent, or (b) asserted an infringement claim that was both objectively baseless and subjectively brought in bad faith.

TABLE OF CONTENTS

Page

Interest of the United States 1
Statement 2
Summary of argument 6
Argument:
Section 285 empowers district courts to award attorney's fees to prevent gross injustice 8
A. Section 285 is a broad grant of discretionary authority to district courts 8
B. District courts have broad discretion to award fees to address the types of misconduct and injustice identified in the cases decided under the 1946 Act 15
C. A totality-of-circumstances approach is consistent with the rules governing fee awards in copyright and trademark cases 20
D. The Federal Circuit's interpretation of Section 285 unduly restricts district courts' discretion to award fees 23
1. Section 285 does not incorporate the test for "sham" litigation under antitrust law 24
2. "Objective baselessness" is not required 27
3. "Subjective bad faith" is not required 29
4. "Clear and convincing" evidence is not required 31
E. The Court should vacate the Federal Circuit's judgment and remand for consideration of petitioner's fee request under the correct standard 32
Conclusion 34

TABLE OF AUTHORITIES

Cases: Page

Addington v. *Texas*, 441 U.S. 418 (1979) 32

Aeration Processes, Inc. v. *Walter Kidde & Co.*, 177 F.2d 772 (2d Cir. 1949) 12

Ale House Mgmt., Inc. v. *Raleigh Ale House, Inc.*, 205 F.3d 137 (4th Cir. 2000) 22, 30

Algren Watch Findings Co. v. *Kalinsky*, 197 F.2d 69 (2d Cir. 1952) 12, 13, 14

Alyeska Pipeline Serv. Co. v. *Wilderness Soc'y*, 421 U.S. 240 (1975) 9, 24, 26

Ankenbrandt v. *Richards*, 504 U.S. 689 (1992) 16

Béné v. *Jeantet*, 129 U.S. 683 (1889) 32

Bilski v. *Kappos*, 130 S. Ct. 3218 (2010) 9

Blanc v. *Spartan Tool Co.*:

168 F.2d 296 (7th Cir.), cert. denied, 335 U.S. 853 (1948) 14

178 F.2d 104 (7th Cir. 1949) 12, 13, 14

Blonder-Tongue Labs., Inc. v. *University of Ill. Found.*, 402 U.S. 313 (1971) 18

Brennan v. *Hawley Prods. Co.*, 98 F. Supp. 369 (N.D. Ill. 1951) 12

Brooks Furniture Mfg., Inc. v. *Dutailier Int'l, Inc.*, 393 F.3d 1378 (Fed. Cir. 2005) 4, 18, 25, 26, 31

Christiansburg Garment Co. v. *EEOC*, 434 U.S. 412 (1978) 28, 30

City of Columbia v. *Omni Outdoor Adver., Inc.*, 499 U.S. 365 (1991) 26

Dimet Proprietary, Ltd. v. *Industrial Metal Protectives*, 109 F. Supp. 472 (D. Del. 1952) 11

Dixie Cup Co. v. *Paper Container Mfg. Co.*, 174 F.2d 834 (7th Cir.), cert. denied, 338 U.S. 867 (1949) 13, 14

Cases—Continued: Page

Dubil v. *Rayford Camp & Co.*, 184 F.2d 899 (9th Cir. 1950) 11, 12, 13, 14
Eagles, Ltd. v. *American Eagle Found.*, 356 F.3d 724 (6th Cir. 2004) 22, 30
eBay, Inc. v. *MercExchange, L.L.C.*, 547 U.S. 388 (2006) 19
Eltech Sys. v. *PPG Indus., Inc.*, 903 F.2d 805 (Fed. Cir. 1990) 17
Epcon Gas Sys., Inc. v. *Bauer Compressors, Inc.*, 279 F.3d 1022 (Fed. Cir. 2002) 17
Faulkner v. *Gibbs*, 199 F.2d 635 (9th Cir. 1952) 31
Fogerty v. *Fantasy, Inc.*, 510 U.S. 517 (1994) 8, 20, 21
Forest Labs., Inc. v. *Abbott Labs.*, 339 F.3d 1324 (Fed. Cir. 2003), cert. denied, 540 U.S. 1109 (2004) 4
General Motors Corp. v. *Devex Corp.*, 461 U.S. 648 (1983) 3, 14
Hall v. *Keller*, 81 F. Supp. 835 (W.D. La. 1949), modified on other grounds, 180 F.2d 753 (5th Cir.), cert. denied, 340 U.S. 818 (1950) 11
Hartman v. *Hallmark Cards, Inc.*, 833 F.2d 117 (8th Cir. 1987) 30
Hensley v. *Eckerhart*, 461 U.S. 424 (1983) 21, 28
Herman & MacLean v. *Huddleston*, 459 U.S. 375 (1983) 32
Hoffmann-La Roche Inc. v. *Invamed Inc.*, 213 F.3d 1359 (Fed. Cir. 2000) 17
Hughes v. *Rowe*, 449 U.S. 5 (1980) 30
iLOR, LLC v. *Google, Inc.*, 631 F.3d 1372 (Fed. Cir. 2011) 4, 25, 27, 29
Independent Fed'n of Flight Attendants v. *Zipes*, 491 U.S. 754 (1989) 15, 20, 27, 30

Cases—Continued: Page

Krieger v. *Colby*, 106 F. Supp. 124 (S.D. Cal. 1952) 11, 12, 31
Laufenberg, Inc. v. *Goldblatt Bros.*, 187 F.2d 823 (7th Cir. 1951) 11, 13
Lincoln Elec. Co. v. *Linde Air Prods. Co.*, 74 F. Supp. 293 (N.D. Ohio 1947) 13, 14
Machinery Corp. of Am. v. *Gullfiber AB*, 774 F.2d 467 (Fed. Cir. 1985) 31
Martin v. *Franklin Capital Corp.*, 546 U.S. 132 (2005) 8, 15, 27, 28, 30
Marx v. *General Revenue Corp.*, 133 S. Ct. 1166 (2013) 2
Mathis v. *Spears*, 857 F.2d 749 (Fed. Cir. 1988) 17
Merrill v. *Builders Ornamental Iron Co.*, 197 F.2d 16 (10th Cir. 1952) 13, 31
Microsoft Corp. v. *i4i Ltd. P'ship*, 131 S. Ct. 2238 (2011) 32
National Ass'n of Prof'l Baseball Leagues, Inc. v. *Very Minor Leagues, Inc.*, 223 F.3d 1143 (10th Cir. 2000) 22, 31
National Brass Co. v. *Michigan Hardware Co.*, 75 F. Supp. 140 (W.D. Mich. 1948) 12
Newman v. *Piggie Park Enters., Inc.*, 390 U.S. 400 (1968) 28, 30
Northcross v. *Board of Ed. of the Memphis City Schs.*, 412 U.S. 427 (1973) 28
Noxell Corp. v. *Firehouse No. 1 Bar-B-Que Rest.*, 771 F.2d 521 (D.C. Cir. 1985) 9, 23, 30, 31
Orrison v. *C. Hoffberger Co.*, 190 F.2d 787 (4th Cir. 1951) 12, 13, 14

Cases—Continued: Page

Packwood v. *Briggs & Stratton Corp.*, 99 F. Supp. 803 (D. Del. 1951), rev'd on other grounds, 195 F.2d 971 (3d Cir.), cert. denied, 344 U.S. 844 (1952) 12

Park-In-Theatres, Inc. v. *Perkins*, 190 F.2d 137 (9th Cir. 1951) 10, 12, 13, 29, 31

Patsy's Brand, Inc. v. *I.O.B. Realty, Inc.*, 317 F.3d 209 (2d Cir. 2003) 22

Pennsylvania Crusher Co. v. *Bethlehem Steel Co.*, 193 F.2d 445 (3d Cir. 1951) 11, 13

Pierce v. *Underwood*, 487 U.S. 552 (1988) 27

Proctor & Gamble Co. v. *Amway Corp.*, 280 F.3d 519 (5th Cir. 2002) 22

Professional Real Estate Investors, Inc. v. *Columbia Pictures Indus., Inc.*, 508 U.S. 49 (1993) 25, 26

Rohm & Haas Co. v. *Crystal Chem. Co.*, 736 F.2d 688 (Fed. Cir. 1984) 17, 29

Securacomm Consulting, Inc. v. *Securacom, Inc.*, 224 F.3d 273 (3d Cir. 2000) 22, 30

Stephen W. Boney, Inc. v. *Boney Servs., Inc.*, 127 F.3d 821 (9th Cir. 1997) 30

Tamko Roofing Prods., Inc. v. *Ideal Roofing Co.*, 282 F.3d 23 (1st Cir. 2002) 22, 30

Teese v. *Huntingdon*, 64 U.S. (23 How.) 2 (1860) 2

Tire Kingdom, Inc. v. *Morgan Tire & Auto, Inc.*, 253 F.3d 1332 (11th Cir. 2001) 22

Vischer Prods. Co. v. *National Pressure Cooker Co.*, 92 F. Supp. 138 (W.D. Wis. 1950) 12, 13, 31

Wilson v. *Seng Co.*, 194 F.2d 399 (7th Cir. 1952) 31

Yamanouchi Pharm. Co. v. *Danbury Pharmacal, Inc.*, 231 F.3d 1339 (Fed. Cir. 2000) 17

Constitution, statutes and rules: Page

U.S. Const.:
Art. I, § 8, Cl. 8 (Patent Clause) 2
Amend. I 25, 26
Act of Aug. 1, 1946, ch. 726, 60 Stat. 778 (35 U.S.C. 70 (1946)) 2, 9
Civil Rights Act of 1964, 42 U.S.C. 2000a *et seq.*:
Tit. II, 42 U.S.C. 2000a *et seq.* 9
42 U.S.C. 2000a-3(b) 9, 28
Tit. VII, 42 U.S.C. 2000e *et seq.* 30
42 U.S.C. 2000e-5(k) 27
Copyright Act of 1976, 17 U.S.C. 505 20
Lanham Act, 15 U.S.C. 1117(a) 3, 22, 23
Patent Act of 1952, 35 U.S.C. 1 *et seq.*:
35 U.S.C. 2(a)(1) 1
35 U.S.C. 2(b)(8) 1
35 U.S.C. 273 (Supp. V 2011) 27
35 U.S.C. 273(b) (Supp. V 2011) 32
35 U.S.C. 273(f) (Supp. V 2011) 27, 29
35 U.S.C. 281 2
35 U.S.C. 282 (2006 & Supp. V 2011) 32
35 U.S.C. 285 ..... *passim*
5 U.S.C. 504(a)(1) 28
11 U.S.C. 523(d) 28
15 U.S.C. 15(a) 9
15 U.S.C. 1692k(a)(3) 8
20 U.S.C. 1617 (1976) 28
28 U.S.C. 1295(a)(1) (Supp. V 2011) 16
28 U.S.C. 1447(c) 27, 30
28 U.S.C. 1498(a) 28
28 U.S.C. 2412(d)(1)(A) 8, 28

Statutes and rules—Continued: Page

42 U.S.C. 1983 30
42 U.S.C. 1988 (1988) 28
Fed. R. Civ. P.:
Rule 16(f) 28
Rule 37(a)(5)(A)(iii) 28

Miscellaneous:

7 Donald S. Chisum, *Chisum on Patents* (1999) 15
92 Cong. Rec. 9188 (1946) 10
98 Cong. Rec. (1952):
p. 9097 15
p. 9323 15
Exec. Office of the President, *Patent Assertion and U.S. Innovation* (June 2013) 19
P.J. Federico, *Commentary on the New Patent Act*, 75 J. Pat. & Trademark Off. Soc'y 161 (1993) 15
Gov't Accountability Office, *Report No. GAO-11-465, Intellectual Property: Assessing Factors that Affect Patent Infringement Litigation Could Help Improve Patent Quality* (Aug. 2013) 18, 20
Richard J. Leighton, *Awarding Attorney's Fees In "Exceptional" Lanham Act Cases: A "Jumble" of "Murky" Law*, 102 Trademark Rep. (2012) 31
3 *Oxford English Dictionary* (1933) 9
Patent Law Codification and Revision: Hearings Before Subcomm. No. 3 of the House Comm. on the Judiciary, 82d Cong., 1st Sess. (1951) 15
S. Rep. No. 1503, 79th Cong., 2d Sess. (1946) 3, 10
S. Rep. No. 1979, 82d Cong., 2d Sess. (1952) 14
U.S. Patent No. 6,019,710 (filed Jan. 6, 1998) 3, 4, 5

Miscellaneous—Continued: Page

Webster's New International Dictionary of the English Language (2d ed. 1958) 9
Webster's Ninth New Collegiate Dictionary (1985) 9

In the Supreme Court of the United States

No. 12-1184

OCTANE FITNESS, LLC, PETITIONER

v.

ICON HEALTH & FITNESS, INC.

ON WRIT OF CERTIORARI
TO THE UNITED STATES COURT OF APPEALS
FOR THE FEDERAL CIRCUIT

BRIEF FOR THE UNITED STATES AS AMICUS CURIAE SUPPORTING PETITIONER

INTEREST OF THE UNITED STATES

This case concerns the interpretation of 35 U.S.C. 285, which authorizes district courts to award attorney's fees in lawsuits under the Patent Act. The Court's decision may affect the practical operation of the patent system by increasing the disincentives for litigants to pursue unreasonable or abusive litigation tactics. The United States Patent and Trademark Office is responsible for issuing patents and—through the Secretary of Commerce—advising the President on issues of patent policy. See 35 U.S.C. 2(a)(1) and (b)(8). Several other agencies of the federal government also have a strong regulatory interest in improving the efficacy of the patent system and in reducing the costs and burdens of patent litigation. The United

States therefore has a substantial interest in the Court's resolution of the question presented.

STATEMENT

This case involves the interpretation of 35 U.S.C. 285, which authorizes a district court to award attorney's fees in patent litigation. Section 285 is intended to deter abusive litigation and to compensate prevailing parties for their litigation expenses in appropriate circumstances. The lower courts denied the fee request at issue here under a restrictive test that requires a prevailing defendant to prove, by "clear and convincing evidence," that the plaintiff's claim of infringement was both "objectively baseless" and brought in "subjective bad faith." Pet. App. 21a (citation omitted).

1. The Patent Clause of the Constitution empowers Congress "[t]o promote the Progress of Science and useful Arts, by securing for limited Times to * * * Inventors the exclusive Right to their * * * Discoveries." U.S. Const. Art. I, § 8, Cl. 8. Title 35 establishes the statutory framework governing the issuance of patents, and it grants a patentee "remedy by civil action for infringement of his patent." 35 U.S.C. 281. The Act also authorizes a prevailing party in a patent action to seek attorney's fees. 35 U.S.C. 285.

Until 1946, patent lawsuits were subject to the "American Rule," under which "[e]ach litigant pays his own attorney's fees, win or lose." *Marx* v. *General Revenue Corp.*, 133 S. Ct. 1166, 1175 (2013) (citation omitted; brackets in original); see, *e.g.*, *Teese* v. *Huntingdon*, 64 U.S. (23 How.) 2, 8 (1860). That year, Congress enacted a new provision declaring that a district court could, in its discretion, award reasonable attorney's fees to the prevailing party. Act of Aug. 1,

1946 (1946 Act), ch. 726, 60 Stat. 778 (35 U.S.C. 70 (1946)). The provision was not intended to make fee-shifting "an ordinary thing in patent suits," but it granted broad discretion to award fees, both to deter infringement and "to prevent a gross injustice to an alleged infringer." S. Rep. No. 1503, 79th Cong., 2d Sess. 2 (1946) (1946 Senate Report).

In the Patent Act of 1952, Congress reorganized the patent laws and, in doing so, made non-substantive changes to the fee-shifting provision "for purposes of clarification only." *General Motors Corp.* v. *Devex Corp.*, 461 U.S. 648, 653 n.8 (1983). As revised and codified at 35 U.S.C. 285, the new provision declared that "[t]he court in exceptional cases may award reasonable attorney fees to the prevailing party." That version of Section 285 remains in effect today.[1]

2. Petitioner and respondent compete in the market for elliptical exercise machines. Pet. 2-3; Pet. App. 27a. Petitioner sells two lines of elliptical machines, the Q45 and the Q47. *Id.* at 5a. Respondent is the assignee of U.S. Patent No. 6,019,710 (filed Jan. 6, 1998) (the '710 patent), which discloses an elliptical machine that employs a specific arrangement of rails and linking components. Pet. App. 32a. In April 2008, respondent brought this civil patent-infringement action, alleging that petitioner's machines practiced the invention claimed in the '710 patent. Pet. 11.

After construing the asserted patent claims, see Pet. App. 62a-86a (*Markman* order), the district court granted petitioner's motion for summary judgment of non-infringement, *id.* at 31a-61a. The court conclud-

---

[1] In 1974, Congress added an identical attorney's fee provision to the Lanham Act, which governs trademarks and false advertising. See 15 U.S.C. 1117(a).

ed, *inter alia*, that respondent had cited "no evidence that any part of [petitioner's] machines" generate elliptical motion by "linear reciprocating displacement," either literally or under the doctrine of equivalents, as required by the asserted claims of the '710 patent. *Id.* at 51a; see *id.* at 51a-53a. The court also held that "no reasonable jury could find" that petitioner's machines incorporated a "stroke rail" of the type disclosed in the '710 patent, either literally or by equivalents. *Id.* at 57a; see *id.* at 55a-58a.

3. Following the district court's entry of judgment, Pet. App. 29a-30a, petitioner requested an award of attorney's fees under 35 U.S.C. 285. The court denied the motion. Pet. App. 19a-28a.

The district court explained that, under Federal Circuit precedent, a prevailing party must establish the prerequisites to a Section 285 fee award "by clear and convincing evidence." Pet. App. 20a (citing *Forest Labs., Inc.* v. *Abbott Labs.*, 339 F.3d 1324, 1327 (Fed. Cir. 2003), cert. denied, 540 U.S. 1109 (2004)). The court held that "'[a]bsent misconduct during patent prosecution or litigation,' a case is exceptional 'only if both (1) the litigation is brought in subjective bad faith, and (2) the litigation is objectively baseless.'" *Id.* at 21a (quoting *iLOR, LLC* v. *Google, Inc.*, 631 F.3d 1372, 1377 (Fed. Cir. 2011)); see *Brooks Furniture Mfg., Inc.* v. *Dutailier Int'l, Inc.*, 393 F.3d 1378, 1381 (Fed Cir. 2005). It defined an "objectively baseless" claim as one that is "so unreasonable that no reasonable litigant could believe [it] would succeed," and explained that "subjective bad faith" requires that the plaintiff "actually know" that its claim has "no objective foundation." Pet. App. 21a, 25a (quoting *iLor*, 631 F.3d at 1377, 1378).

The district court found that petitioner had not satisfied either of Section 285's requirements. Pet. App. 22a-28a. It determined that respondent's various theories of infringement—though ultimately lacking merit—were neither "frivolous" nor "objectively baseless." *Id.* at 22a-25a. It likewise rejected the contention that respondent had made misleading and baseless arguments in its summary-judgment briefing. *Id.* at 24a-25a.

Finally, the district court rejected petitioner's argument that respondent had brought this infringement suit in subjective bad faith. Pet. App. 26a-28a. The court found no evidence of bad faith in emails in which respondent's employees had discussed the competitive business advantages of filing the lawsuit and described the '710 patent as an "old patent we had for a long time that was sitting on the shelf." *Id.* at 26a-27a. Such "stray comments," the court explained, "do not tend to prove that the company's leadership and counsel pursued the lawsuit in bad faith." *Id.* at 27a. "In sum," the court concluded, "[t]his case is not exceptional, and an award of attorney's fees is not warranted." *Id.* at 28a.

4. Respondent appealed the judgment of non-infringement, and petitioner cross-appealed the district court's denial of fees under Section 285. The Federal Circuit affirmed the district court's judgment in all respects. Pet. App. 1a-17a. As relevant here, the court of appeals rejected petitioner's argument that the district court had "applied an overly restrictive standard" under Section 285. *Id.* at 17a. The court explained that it had "reviewed the record and conclude[d] that the [district] court did not err in

denying [petitioner's] motion to find the case exceptional." *Ibid.*

SUMMARY OF ARGUMENT

The Patent Act authorizes district courts to award attorney's fees to prevailing parties "in exceptional cases." 35 U.S.C. 285. The text and history of that provision make clear that, although fees should not be awarded in the typical patent case, district courts possess broad equitable discretion to consider all relevant circumstances in determining whether a particular case is "exceptional."

Congress first authorized fee-shifting in a 1946 provision that authorized a district court to award fees to prevailing parties "in its discretion." The legislative history of that provision reflected Congress's intent to authorize such awards to deter patent infringement and to prevent "gross injustice" to innocent alleged infringers. Courts applied the provision in accordance with that intent. In a series of decisions between 1946 and 1952, they authorized fee awards to prevailing defendants in a range of circumstances involving pre-litigation misconduct, abusive litigation tactics, and plaintiffs' reliance on groundless legal theories. In doing so, courts applied a flexible, totality-of-circumstances analysis that considered whether such conduct was grossly unjust to the defendant.

When Congress enacted Section 285 as part of the Patent Act of 1952, it legislated against that backdrop. Although the new fee-shifting provision included the "exceptional cases" language, and lacked the 1946 provision's explicit reference to the court's "discretion," it was neither intended nor understood to nar-

row the circumstances in which fees would be appropriate.

Section 285 should therefore be construed to authorize a fee award to a prevailing defendant when a district court determines—based on its analysis of the totality of circumstances present in each case—that such an award is necessary to prevent gross injustice to that defendant. That flexible approach is similar to this Court's interpretation of a similar fee-shifting provision in the Copyright Act, and to the majority view of the identical fee-shifting provision in the Lanham Act.

Instead of rooting its analysis in the text or history of Section 285, the Federal Circuit has purported to borrow the two-prong test this Court has used to determine, for purposes of the *Noerr-Pennington* doctrine of antitrust law, whether particular litigation is a "sham." The Federal Circuit's test requires (1) a rigid and demanding threshold showing that a claim was objectively without justification; (2) independent evidence of the plaintiff's subjective state of mind in bringing the baseless claim; and (3) proof of these elements by "clear and convincing evidence." These requirements have diminished Section 285's effectiveness as a tool to discourage abusive patent litigation and mitigate injustice suffered by prevailing parties in particular cases. This Court should reject the Federal Circuit's analysis, make clear that district courts have broad discretion to award fees in exceptional cases in accordance with equitable principles, and vacate the judgment below.

ARGUMENT

SECTION 285 EMPOWERS DISTRICT COURTS TO AWARD ATTORNEY'S FEES TO PREVENT GROSS INJUSTICE

A. Section 285 Is A Broad Grant Of Discretionary Authority To District Courts

The text and history of Section 285 establish Congress's intent to vest district courts with broad discretion when deciding whether to make fee awards in patent cases.

1. Section 285 declares that a district court "may award" attorney's fees "in exceptional cases." 35 U.S.C. 285. Unlike some other federal fee-shifting statutes, this language does not dictate the criteria the court must consider when deciding whether to award fees.[2] Rather, the statement that a court "may award" fees empowers the court to exercise judgment in deciding whether fees are justified in any particular case. As this Court has recognized in interpreting similar fee-shifting provisions, "[t]he word 'may' clearly connotes discretion." *Martin* v. *Franklin Capital Corp.*, 546 U.S. 132, 136 (2005) (brackets in original) (quoting *Fogerty* v. *Fantasy, Inc.*, 510 U.S. 517, 533 (1994)).

The only textual constraint on the district court's exercise of this discretion is the requirement that the case must be "exceptional." 35 U.S.C. 285. That language makes clear that the American Rule will continue to govern the allocation of fees in the mine run of patent-infringement disputes.[3] In and of itself,

---

[2] Cf., *e.g.*, 28 U.S.C. 2412(d)(1)(A); 15 U.S.C. 1692k(a)(3).

[3] This Court has contrasted Section 285's "exceptional cases" limitation with the mandatory fee-shifting provision of the anti-

however, the word "exceptional" does not limit the factors a district court may consider in determining whether fees should be awarded in a particular case.

The standard meaning of "exceptional" is "not ordinary," "uncommon," or "rare." *Webster's New International Dictionary of the English Language* 889 (2d ed. 1958).[4] As then-Judge Ginsburg explained when interpreting the identical provision of the Lanham Act, the word "exceptional" in this context "is most reasonably read to mean what the word is generally understood to indicate—uncommon, not run-of-the-mine." *Noxell Corp.* v. *Firehouse No. 1 Bar-B-Que Rest.*, 771 F.2d 521, 526 (D.C. Cir. 1985) (joined by then-Judge Scalia); cf. *Bilski* v. *Kappos*, 130 S. Ct. 3218, 3226 (2010) ("In patent law, as in all statutory construction, * * * words will be interpreted as taking their ordinary, contemporary, common meaning.") (internal quotation marks and citation omitted).

2. The history and subsequent judicial implementation of the 1946 Act provide the backdrop against which Section 285 was enacted in 1952. The 1946 Act stated that a court "may in its discretion award reasonable attorney's fees to the prevailing party upon the entry of judgment on any patent case." 60 Stat. 778. The accompanying Senate committee report explained:

---

trust laws, 15 U.S.C. 15(a), and the attorney's fee provision of Title II of the Civil Rights Act of 1964, 42 U.S.C. 2000a-3(b), which this Court has interpreted to require a fee award *absent* exceptional circumstances. *Alyeska Pipeline Serv. Co.* v. *Wilderness Soc'y*, 421 U.S. 240, 261-262 (1975).

[4] See, *e.g.*, *Webster's Ninth New Collegiate Dictionary* 432 (1985) ("deviating from the norm"); 3 *Oxford English Dictionary* 374 (1933) ("out of the ordinary course, unusual, special").

> It is not contemplated that the recovery of attorney's fees will become an ordinary thing in patent suits, but the discretion given the court in this respect, in addition to the present discretion to award triple damages, will discourage infringement of a patent by anyone thinking that all he would be required to pay if he loses the suit would be a royalty. The provision also is made general so as to enable the court to prevent a gross injustice to an alleged infringer.

1946 Senate Report 2. That description reflects Congress's intent both that fee awards be reserved for unusual cases, and that district courts be given broad discretion to determination whether awards are warranted in particular circumstances.[5]

Consistent with that understanding, courts applying the 1946 provision generally recognized that fees should be awarded rarely, and for the purpose of avoiding significant injustice in unusual cases. As the Ninth Circuit explained in an influential decision, the goal of the provision was to empower district courts to address conduct marked by "unfairness or bad faith in the conduct of the losing party, or some other equitable consideration of similar force, which makes it grossly unjust that the winner of the particular law suit be left to bear the burden of his own counsel fees." *Park-In-Theatres, Inc.* v. *Perkins*, 190 F.2d 137, 142 (1951). Similarly, the Seventh Circuit explained that an award of fees "is not the usual or cus-

---

[5] See also, *e.g.*, 92 Cong. Rec. 9188 (1946) (statement of Sen. Pepper, chairman of the Senate Comm. on Patents) (explaining that purpose of the provision was to "award[] to the court discretionary power to allow plaintiffs to recover attorneys' fees, if the court considers it proper to allow such recoveries").

tomary procedure" in patent cases and is "not to be allowed as a matter of course," but rather only where "vexatious or unjustified litigation is shown." *Laufenberg, Inc.* v. *Goldblatt Bros.*, 187 F.2d 823, 825 (1951).

Other courts similarly invoked general principles of equity and fairness in explaining the proper basis for fee awards under the 1946 Act. The Third Circuit noted that the 1946 provision was designed to allow district courts to award fees "to prevent a gross injustice." *Pennsylvania Crusher Co.* v. *Bethlehem Steel Co.*, 193 F.2d 445, 450-451 (1951); see *Hall* v. *Keller*, 81 F. Supp. 835, 837 (W.D. La. 1949), modified on other grounds, 180 F.2d 753 (5th Cir.), cert. denied, 340 U.S. 818 (1950). Various district courts noted that such awards would be appropriate when there is "such unfairness or inequitable conduct of the part of the losing party which makes it unjust that the winning party should bear his own counsel fees," *Dimet Proprietary, Ltd.* v. *Industrial Metal Protectives*, 109 F. Supp. 472, 474 (D. Del. 1952), or when necessary to address "unfairness or bad faith" conduct, *Krieger* v. *Colby*, 106 F. Supp. 124, 131-132 (S.D. Cal. 1952).

In applying these principles between 1946 and 1952, courts did not invoke rigid or mechanical formulas. Rather, they assessed the totality of the circumstances and considered whether the losing party had inflicted "gross injustice" on the prevailing party before or during the case. Examples of grossly unjust conduct that could support a fee award included:

- fraud on the Patent Office in obtaining the patent alleged to have been infringed;[6]

---

[6] See, *e.g.*, *Pennsylvania Crusher Co.*, 193 F.2d at 450-451; *Dubil* v. *Rayford Camp & Co.*, 184 F.2d 899, 903 (9th Cir. 1950).

- willful infringement by the defendant;[7]
- "harassing" tactics during the litigation, including delay pursued for tactical gain and vexatious motions generating "needless work" for adversaries;[8] and
- untenable legal or factual theories on the merits of the case.[9]

With respect to the last of these bases for fee awards—the legal or factual deficiency of the losing party's theory—courts made clear that fees were not to be awarded in every case, simply as "a penalty for failure to win a patent infringement suit." *Park-In-*

---

[7] See, *e.g.*, *Krieger*, 106 F. Supp. at 131-132; *Packwood* v. *Briggs & Stratton Corp.*, 99 F. Supp. 803, 808 (D. Del. 1951), rev'd on other grounds, 195 F.2d 971 (3d Cir.), cert. denied, 344 U.S. 844 (1952); see also *Brennan* v. *Hawley Prods. Co.*, 98 F. Supp. 369, 370 (N.D. Ill. 1951) (unreasonable delay in bringing suit).

[8] See, *e.g.*, *Dubil*, 184 F.2d at 902-903 (dilatory tactics); *Vischer Prods. Co.* v. *National Pressure Cooker Co.*, 92 F. Supp. 138, 139 (W.D. Wis. 1950) ("undue harassment" and unreasonable delay); *National Brass Co.* v. *Michigan Hardware Co.*, 75 F. Supp. 140, 142 (W.D. Mich. 1948) ("harassing or vexatious tactics" such as unreasonable delays); see also *Orrison* v. *C. Hoffberger Co*, 190 F.2d 787, 791 (4th Cir. 1951) (baseless motion for new trial); *Aeration Processes, Inc.* v. *Walter Kidde & Co.*, 177 F.2d 772, 773 (2d Cir. 1949) (abandoned claim requiring "needless work" by prevailing party).

[9] See, *e.g.*, *Algren Watch Findings Co.* v. *Kalinsky*, 197 F.2d 69, 72 (2d Cir. 1952) (upholding award based on deficiency of proof at trial); *Orrison*, 190 F.2d at 791 (upholding award when there was "no reasonable ground" for plaintiff to prosecute motion for new trial); *Blanc* v. *Spartan Tool Co.*, 178 F.2d 104, 105 (7th Cir. 1949) (upholding award based on district court's analysis of "the character of the * * * patents here involved," the construction of the defendant's allegedly-infringing devices, and prior decisions of other courts).

Theatres, 190 F.2d at 142. They also repeatedly emphasized, however, that a district court's determination that a party's litigation position was "unjustified," "unwarranted," "unreasonable," "groundless," or the like could indicate the type of gross injustice needed to justify an award.[10]

Courts also consistently described the 1946 provision as vesting district courts with significant discretion to determine whether fees should be awarded in particular cases.[11] And the courts of appeals consist-

---

[10] See, *e.g.*, *Merrill* v. *Builders Ornamental Iron Co.*, 197 F.2d 16, 25 (10th Cir. 1952) (noting that "wholly unjustified litigation" would make it "grossly unjust" for prevailing defendant to bear its own fees); *Pennsylvania Crusher Co.*, 193 F.2d at 450-451 (noting that a finding of "unjustified litigation" would be "adequate justification for awarding attorneys' fees"); *Orrison*, 190 F.2d at 791 (upholding award when plaintiff had "no reasonable ground" for seeking new trial); *Park-In-Theatres*, 190 F.2d at 143 (implying that a valid finding that a case was brought on "surmise and suspicion" could support a fee award); *Laufenberg*, 187 F.2d at 825 (acknowledging that "unjustified litigation" can create "gross injustice" and support a fee award); *Vischer*, 92 F. Supp. at 139 (noting that fee award is appropriate when suit is brought "without justification" or is "wholly unfounded" and brought "for malicious purposes"); *Lincoln Elec. Co.* v. *Linde Air Prods. Co.*, 74 F. Supp. 293, 294 (N.D. Ohio 1947) (denying fee award because action was not "absolutely unwarranted or unreasonable").

[11] See, *e.g.*, *Algren*, 197 F.2d at 72 (noting that fee award "is clearly discretionary"); *Orrison*, 190 F.2d at 791 (noting that decision to award fees "lies in the sound discretion of the trial court under the statute"); *Dubil*, 184 F.2d at 903 (noting that "[i]t is not the duty of the reviewing court to interfere with the exercise of the discretionary power confided to the trial courts by Congress to award attorney fees in proper cases"); *Blanc*, 178 F.2d at 105 (same); *Dixie Cup Co.* v. *Paper Container Mfg. Co.*, 174 F.2d 834, 836 (7th Cir.), cert. denied, 338 U.S. 867 (1949) (describing decision to award fees as "entirely a matter of discretion" of district court);

ently reviewed fee awards under a deferential abuse-of-discretion standard.[12] The Seventh Circuit expressed the typical approach: "We think it clear that under the statute the question is one of discretion. The court exercised its discretion and that ends the matter unless we can say as a matter of law that there was a clear abuse of discretion." *Blanc* v. *Spartan Tool Co.*, 168 F.2d 296, 300, cert. denied, 335 U.S. 853 (1948).

3. The 1952 amendment of the fee-shifting provision was not intended to change the substantive standards for granting fee awards or otherwise to curtail the district courts' discretion. Congress added the "exceptional cases" language in Section 285 "for purposes of clarification only." *General Motors Corp.* v. *Devex Corp.*, 461 U.S. 648, 653 n.8 (1983). The Senate Report on the 1952 bill stated that the new provision was "substantially the same as the corresponding provision in [the 1946 Act]," and that the "exceptional cases" language was inserted to "express[] the intention of the present [1946] statute as shown by its legislative history and as interpreted by the courts." S. Rep. No. 1979, 82d Cong., 2d Sess. 30 (1952). Similarly, Chief Patent Examiner P.J. Federico testified that the term "exceptional cases" was "picked up from the reports in passing that first law [*i.e.*, the 1946 Act], which indicated that was what was meant, and the decisions of the courts that have followed that."

---

see also, *e.g.*, *Lincoln Elec. Co.*, 74 F. Supp. at 294 (noting that "[t]he court is invested with discretionary power" to make fee awards).

[12] See, *e.g.*, *Algren*, 197 F.2d at 72; *Orrison*, 190 F.2d at 791; *Dubil*, 184 F.2d at 903; *Blanc*, 178 F.2d at 105; *Dixie Cup Co.*, 174 F.2d at 836.

Patent Law Codification and Revision: Hearings Before Subcomm. No. 3 of the House Comm. on the Judiciary, 82d Cong., 1st Sess. 109 (1951). Federico further testified that "[w]hat [the phrase 'exceptional cases'] constitutes is left, and stays left, to the discretion of the court that is conducting the case." *Ibid.*[13]

B. District Courts Have Broad Discretion To Award Fees To Address The Types Of Misconduct And Injustice Identified In The Cases Decided Under The 1946 Act

Other than restricting fee awards to "exceptional cases," the text of Section 285 does not specify the circumstances under which fees in patent suits may be awarded. This Court has repeatedly encountered similar fee-shifting provisions that do not specify substantive criteria governing the trial court's fee-shifting decisions. In such cases, the Court has held that the limits on trial-court discretion must be found in "the large objectives" of the relevant statute. See, *e.g.*, *Martin*, 546 U.S. at 139-140; *Independent Fed'n of Flight Attendants* v. *Zipes*, 491 U.S. 754, 759 (1989). For at least four reasons, Section 285 should be construed to ratify the prevailing judicial understanding of the 1946 Act, *i.e.*, as conferring broad discretion on district courts to determine whether a departure from

---

[13] Accord, *e.g.*, P.J. Federico, *Commentary on the New Patent Act*, 75 J. Pat. & Trademark Off. Soc'y 161, 216 (1993); 98 Cong. Rec. 9097 (1952) (statement of Sen. Wiley) (noting that 1952 bill "simply constitutes a restatement of the patent laws of the United States); 98 Cong. Rec. at 9323 (statement of Sen. McCarran) (indicating that bill would "codif[y] the present patent laws"); 7 Donald S. Chisum, *Chisum on Patents* § 20.03[4][c][i], at 20-464 (1999) (noting that "no change in meaning was intended" by the 1952 amendments).

the American Rule is appropriate to prevent substantial injustice in a particular case.

1. If courts between 1946 and 1952 had awarded fees as a matter of course to prevailing patent litigants, Congress's addition of the term "exceptional cases" would naturally be understood as an effort to overturn that judicial approach. As explained above, however, courts applying the 1946 Patent Act consistently recognized that fees should be awarded only in unusual cases, even though the text of the 1946 Act did not compel that interpretation. See pp. 9-14, *supra*. By adding the term "exceptional cases" in 1952, Congress therefore codified rather than superseded the pre-existing standard for awarding fees in patent cases. Cf. *Ankenbrandt* v. *Richards*, 504 U.S. 689, 700-701 (1992). That sequence of events implies congressional approval not only of the basic principle that fee awards should be reserved for unusual cases, but also of the criteria that courts had developed for determining when fees should be awarded.

2. The legislative history of the 1952 Patent Act confirms that inference. During the deliberations that culminated in the enactment of Section 285, responsible officials in both the Legislative and Executive Branches consistently expressed the understanding that the established judicial construction of the 1946 fee provision was correct, and that Section 285 was intended to carry forward that approach. See pp. 14-15, *supra*.

3. Congress created the Federal Circuit in 1982, and vested it with exclusive appellate jurisdiction in patent cases, see 28 U.S.C. 1295(a)(1) (Supp. V 2011), in an effort to bring greater uniformity to the enforcement of the patent laws. If the Federal Circuit

had adopted its current interpretation of Section 285 at or near the time of the court's creation, and had adhered to that standard ever since, Congress's failure to overturn that approach would carry significant weight.

In fact, however, the Federal Circuit adhered for most of its history to the totality-of-the-circumstances approach that the regional circuits had applied between 1946 and 1952. In *Rohm & Haas Co.* v. *Crystal Chemical Co.*, 736 F.2d 688 (1984), for example, a five-judge panel addressed the question whether Section 285 authorizes an award of fees on appeal. Writing for a unanimous court, Judge Giles Rich—himself one of the principal architects of the 1952 Patent Act—quoted with approval from *Park-In-Theaters* and explained that Section 285 was enacted to "prevent[] injustice to a party involved in a patent suit." *Id.* at 691-692 & n.5; see also, *e.g.*, *Yamanouchi Pharm. Co.* v. *Danbury Pharmacal, Inc.*, 231 F.3d 1339, 1347 (Fed. Cir. 2000) ("In assessing whether a case qualifies as exceptional, the district court must look at the totality of the circumstances.").

Consistent with that view, subsequent Federal Circuit decisions identified a variety of exceptional circumstances that could support a fee award under Section 285. Those circumstances included willful infringement; litigation misconduct; inequitable conduct by the patentee in securing the patent; vexatious or unjustified litigation; bad faith; and the assertion of frivolous claims or defenses. See, *e.g.*, *Epcon Gas Sys., Inc.* v. *Bauer Compressors, Inc.*, 279 F.3d 1022, 1034 (2002); *Hoffmann-La Roche Inc.* v. *Invamed Inc.*, 213 F.3d 1359, 1365 (2000); *Eltech Sys.* v. *PPG Indus., Inc.*, 903 F.2d 805, 807 (1990); *Mathis* v.

Spears, 857 F.2d 749, 754, 755 (1988). It was not until 2005 that the Federal Circuit adopted the more rigid and demanding standard that the courts below applied in this case. See *Brooks Furniture Mfg., Inc.* v. *Dutailier Int'l, Inc.*, 393 F.3d 1378, 1381 (2005) ("Absent misconduct in [the] conduct of the litigation or in securing the patent, sanctions may be imposed against the patentee only if both (1) the litigation is brought in subjective bad faith, and (2) the litigation is objectively baseless."). The Federal Circuit's belated and unexplained reversal of course provides no sound reason for rejecting the inference that Congress intended in 1952 to carry forward the judicial approach that had prevailed under the 1946 Act.

4. Congress's desire to alleviate "gross injustice" to innocent defendants in rare cases remains salient today. This Court has long recognized that litigating a patent case is typically a "very costly process" that can be especially "staggering" for small businesses. *Blonder-Tongue Labs., Inc.* v. *University of Ill. Found.*, 402 U.S. 313, 334 (1971) (citation omitted). The median cost of patent suits where the amount in controversy is between $1 million and $25 million is $2.5 million, and the cost rises to nearly $5 million in cases involving more than $25 million. Gov't Accountability Office, *Report No. GAO-11-465, Intellectual Property: Assessing Factors That Affect Patent Infringement Litigation Could Help Improve Patent Quality* 26 n.47 (Aug. 2013) (*GAO Report*) (reporting 2011 data collected by the American Intellectual Property Law Association).

Such costs can make it prohibitively expensive for defendants wrongly accused of infringement to vindicate themselves in court. Patentees can exploit the

extraordinary costs of patent litigation by filing (or threatening to file) harassing or unfounded infringement suits, with the goal of pressuring competitors to exit certain markets or pay licensing fees rather than incur the costs associated with mounting a defense.

In recent years, moreover, "[a]n industry has developed in which firms use patents not as a basis for producing and selling goods but, instead, primarily for obtaining license fees." *eBay, Inc.* v. *MercExchange, L.L.C.*, 547 U.S. 388, 396 (2006) (Kennedy, J., concurring). Such firms can play a useful role by facilitating manufacturers' access to new inventions and inventors' access to new capital, thereby allowing inventors to focus on what they do best—invent. And the fact that a particular unsuccessful infringement plaintiff does not practice the patent on which its suit was premised does not, in and of itself, suggest that its infringement claim was abusive or that a fee award is appropriate.

On the other hand, specialized patent-assertion entities typically do not face (and are often structured to avoid) the normal disincentives to filing vexatious or frivolous infringement claims. Unlike traditional companies, for example, such entities are not vulnerable to infringement counterclaims and may face little reputational risk from pursuing aggressive litigation strategies. Many are established as shell companies for the purpose of filing suit. For a subset of such patent-assertion entities, moreover, litigation is not a cost but a method of doing business designed to extract serial settlements from multiple defendants. For these reasons, non-practicing firms appear to have contributed to an upsurge in recent patent litigation. See Exec. Office of the President, *Patent Asser-*

tion and U.S. Innovation 2-7, 9-12 (June 2013) (*EOP Report*); *GAO Report* 3 & n.8, 14-21, 31-32, 34-35. By enabling district courts to award reasonable attorney's fees to prevailing defendants who have been unfairly targeted by such firms, Section 285 can deter misconduct and enable victims to defend themselves.

C. A Totality-Of-Circumstances Approach Is Consistent With The Rules Governing Fee Awards In Copyright And Trademark Cases

The totality-of-circumstances approach described above is consistent with this Court's treatment of the similar discretionary fee-shifting provision in the Copyright Act, and with the dominant interpretation of identical language in the Lanham Act. Consistency across these fields of law makes sense, because—as the Court has emphasized—"similar language" in fee-shifting statutes is "'a strong indication' that they are to be interpreted alike." *Zipes*, 491 U.S. at 758 n.2 (citation omitted).

1. The Copyright Act of 1976 provides that, in any copyright-infringement action, "the court may * * * award a reasonable attorney's fee to the prevailing party as part of the costs." 17 U.S.C. 505. In *Fogerty*, this Court considered, in the copyright context, essentially the same question that is presented in this case—"what standards should inform a court's decision to award attorney's fees to a prevailing defendant in a[n] * * * infringement action." 510 U.S. at 519. The Court rejected the Ninth Circuit's requirement that prevailing defendants (but not prevailing plaintiffs) must establish that the losing plaintiff's infringement action was either "frivolous or brought in bad faith." *Id.* at 520-521; see *id.* at 522-533. The Court also rejected the contention that fees

in copyright cases should be awarded automatically or as a matter of course. See *id.* at 533-534.

The Court in *Fogerty* explained that "[t]here is no precise rule or formula for making these determinations," and that district courts should instead exercise "equitable discretion" in determining whether fee awards are appropriate in particular copyright cases. 510 U.S. at 534 (quoting *Hensley* v. *Eckerhart*, 461 U.S. 424, 436 (1983)). The Court enumerated various "nonexclusive" factors that lower courts had considered, including "frivolousness, motivation, objective unreasonableness (both in the factual and in the legal components of the case) and the need in particular circumstances to advance considerations of compensation and deterrence." *Id.* at 534 n.19 (citation omitted). The Court stated that "such factors may be used to guide courts' discretion" so long as they are "faithful to the purposes of the Copyright Act" and are applied equally to prevailing plaintiffs and defendants. *Ibid.*

A similar totality-of-circumstances approach should govern the application of Section 285 in the patent context. In comparing the fee-shifting provisions of the Patent and Copyright Acts, the Court in *Fogerty* described Section 285 as "contain[ing] language similar to that of [17 U.S.C.] 505, with the added proviso that fees are only to be awarded in 'exceptional cases.'" 510 U.S. at 525 n.12. That proviso makes clear that, in considering the various discretionary factors described above, a district court should ask whether the case before it is sufficiently different from the usual patent suit to warrant "exceptional" treatment. That limitation provides no justification, however, for restricting the range of circumstances that courts may

consider in determining whether particular cases are "exceptional."

2. Use of a totality-of-circumstances approach under Section 285 is also consistent with the dominant interpretation of the identical fee-shifting provision in the Lanham Act, 15 U.S.C. 1117(a). Like Section 285, Section 1117(a) declares that "[t]he court in exceptional cases may award reasonable attorney fees to the prevailing party." The courts of appeals have generally authorized district courts to award fees to prevailing defendants by applying equitable principles and weighing the particular facts of each case, while making clear that no single factor is required or otherwise dispositive.[14]

Then-Judge Ginsburg's analysis for the D.C. Circuit in *Noxell* is particularly instructive. There, a Maryland plaintiff brought a trademark-infringement

---

[14] See, *e.g.*, *Tamko Roofing Prods., Inc.* v. *Ideal Roofing Co.*, 282 F.3d 23, 32-33 (1st Cir. 2002) (embracing "case-specific multi-factored analysis"); *Securacomm Consulting, Inc.* v. *Securacom, Inc.*, 224 F.3d 273, 281 (3d Cir. 2000) (noting that Congress wanted courts to assess the totality of the circumstances in each case"); *Ale House Mgmt., Inc.* v. *Raleigh Ale House, Inc.*, 205 F.3d 137, 144 (4th Cir. 2000) (identifying non-exclusive list of factors); see also *Eagles, Ltd.* v. *American Eagle Found.*, 356 F.3d 724, 729 (6th Cir. 2004) (endorsing multi-factor analysis in which no single factor is necessarily dispositive); *National Ass'n of Prof'l Baseball Leagues, Inc.* v. *Very Minor Leagues, Inc.*, 223 F.3d 1143, 1147 (10th Cir. 2000) (endorsing broad multi-factor analysis in which "[n]o one factor is determinative"). Three circuits, by contrast, appear to require a showing of bad faith or equivalent misconduct as a predicate for a fee award under the Lanham Act. See *Patsy's Brand, Inc.* v. *I.O.B. Realty, Inc.*, 317 F.3d 209, 221-222 (2d Cir. 2003); *Proctor & Gamble Co.* v. *Amway Corp.*, 280 F.3d 519, 527-528 & n.12 (5th Cir. 2002); *Tire Kingdom, Inc.* v. *Morgan Tire & Auto, Inc.*, 253 F.3d 1332, 1335 (11th Cir. 2001).

suit in the District of Columbia against two San Francisco-based restaurants and their owner. *Noxell*, 771 F.2d at 523. The suit was dismissed for improper venue because location of the action in the District of Columbia was "unreasonable, contrary to established law, and * * * unsupported by even a wisp of tenable argument." *Ibid.* (internal quotation marks and citations omitted).

In affirming a fee award to the prevailing defendant, the court in *Noxell* explained that Section 1117(a)'s "exceptional cases" requirement was not intended "to harness courts to a 'hardly ever' rule" for making fee awards. 771 F.2d at 526. It interpreted "exceptional" according to its usual meaning ("uncommon, not run-of-the-mine") and explained that "[s]omething less than 'bad faith' * * * suffices to mark a case as 'exceptional.'" *Ibid.* It then cited precedent for the proposition that Section 1117(a) authorizes fees "when [the] plaintiff's action is unreasonable *or* in bad faith," and concluded that the plaintiff had acted unreasonably—and perhaps with a "hint of 'economic coercion'"—by suing the defendant so far from California. *Id.* at 526-527 (emphasis added).

Noxell and other Lanham Act decisions reflect a flexible approach under which district courts may consider whether various forms of misconduct—independently or in combination—qualify a case as "exceptional" and thus support a fee award. The same approach is appropriate here.

D. The Federal Circuit's Interpretation Of Section 285 Unduly Restricts District Courts' Discretion To Award Fees

The two-prong test established by Federal Circuit precedent, and applied by the courts below, requires

prevailing defendants to prove by "clear and convincing" evidence that the plaintiff's claim was both "objectively baseless" and brought in "subjective bad faith." Pet. App. 17a, 20a-21a, 25a (citation omitted). Those requirements apply to any case in which a prevailing defendant seeks a fee award on grounds other than the plaintiff's misconduct in securing the patent or during litigation. *Id.* at 21a. That approach places unwarranted constraints on district courts' exercise of equitable discretion based on consideration of all the relevant circumstances.

1. Section 285 does not incorporate the test for "sham" litigation under antitrust law

The Federal Circuit's rigid two-prong test has no basis in the text or history of either Section 285 or the original 1946 Act, which was consistently construed to permit a broader equitable inquiry focusing on whether the conduct at issue was "grossly unjust." See pp. 8-15, *supra*. Nor is it based on analogous fee-shifting provisions in copyright or trademark law, neither of which has been interpreted in this fashion. See pp. 20-24, *supra*. Indeed, the government is not aware of *any* federal fee-shifting statute that requires a defendant to demonstrate both subjective bad faith and objective baselessness before fees may be awarded to a prevailing defendant. Even under the American Rule, fees may be awarded against a plaintiff who has proceeded in bad faith. See *Alyeska Pipeline Serv. Co.* v. *Wilderness Soc'y*, 421 U.S. 240, 258-259 (1975). The Federal Circuit's construction of Section 285 in *Brooks Furniture* therefore effectively *restricts* the circumstances in which district courts could award fees even in the absence of the statute. Nothing in the

text or history of Section 285 suggests Congress intended such an unlikely result.

The Federal Circuit purported to borrow its two-prong standard from *Professional Real Estate Investors, Inc.* v. *Columbia Pictures Industries, Inc.*, 508 U.S. 49, 60-61 (1993) (*PRE*), where this Court considered the "sham" exception to the *Noerr-Pennington* doctrine of antitrust law. See *iLOR, LLC* v. *Google, Inc.*, 631 F.3d 1372, 1377 (Fed. Cir. 2011); *Brooks Furniture*, 393 F.3d at 1381. The *Noerr-Pennington* doctrine is rooted in the First Amendment right to petition, and it holds that a defendant is generally exempt from antitrust liability for conduct—including litigation against business rivals—that seeks to influence government decisionmaking. *PRE*, 508 U.S. at 56-58. The *PRE* exception to this doctrine for "sham" litigation applies when an antitrust defendant's misconduct consists of filing a baseless lawsuit whose real purpose is not to influence the government, but rather "to interfere directly with the business relationships of a competitor." *Id.* at 51, 56 (citation omitted).

In *PRE*, the Court held that this standard requires proof of both (1) an objectively baseless claim and (2) subjective anticompetitive intent. 508 U.S. at 60-61. The Court explained that a claim is "objectively baseless" if it lacks "probable cause," and thus could subject the person who brings it to a common-law tort action for wrongful institution of civil proceedings. *Id.* at 62-63. It also noted that a showing of ill intent requires proof that the antitrust defendant filed its baseless lawsuit in an attempt to use "governmental *process*—as opposed to the *outcome* of that process—as an anticompetitive weapon" against its rivals. *Id.* at 60-61 (citations omitted).

The Federal Circuit adopted the *PRE* standard without even attempting to explain why it makes sense to import a test from the antitrust context to govern the award of attorney's fees under Section 285. See *Brooks Furniture*, 393 F.3d at 1381. Its approach ignores important legal and practical differences between the fee-shifting and antitrust contexts. The *PRE* standard is used to define the circumstances under which the filing and pursuit of a lawsuit can be treated as a distinct actionable wrong, potentially remediable through an award of treble damages. By contrast, when a prevailing defendant in a patent-infringement suit seeks fees under Section 285, an award merely reapportions the litigation costs associated with the unsuccessful lawsuit.

The *Noerr-Pennington* standard rests in part on this Court's recognition that the imposition of civil liability based on efforts to influence government action raises significant First Amendment concerns. See *City of Columbia* v. *Omni Outdoor Adver., Inc.*, 499 U.S. 365, 379-380 (1991); cf. *PRE*, 508 U.S. at 56 ("Those who petition government for redress are generally immunity from antitrust liability."). By contrast, the Court has never suggested that fee-shifting provisions implicate the First Amendment rights of unsuccessful litigants. To the contrary, the Court has consistently recognized that, although the American Rule leaves each party to bear its own costs in the absence of a contrary legislative determination, "the circumstances under which attorneys' fees are to be awarded and the range of discretion of the courts in making those awards are matters for Congress to determine." *Alyeska*, 421 U.S. at 262.

2. "Objective baselessness" is not required

Even standing alone, the Federal Circuit's "objective baselessness" requirement appears to be overly restrictive, insofar as it permits an award only if the plaintiff's legal theory was "so unreasonable that no reasonable litigant could believe it would succeed." *iLOR*, 631 F.3d at 1378. This seems more stringent than the formulations set forth in the early cases interpreting the 1946 fee-shifting provision, which recognized that a losing party's legal or factual theory could be a valid basis for making a fee award if that theory was "unjustified," "wholly unjustified," "unwarranted," "unreasonable," or "groundless." See p. 13 & note 10, *supra*. It is also at odds with 35 U.S.C. 273(f) (Supp. V 2011), in which Congress recognized that a case can be "exceptional" under Section 285 merely because the losing party's litigating position was without a "reasonable basis."[15]

In other contexts, this Court has occasionally specified the extent to which a party's legal position must be unreasonable in order to justify a fee award to a prevailing party.[16] Here, however, the reasonableness

---

[15] Originally enacted in 1999, Section 273 of the Patent Act creates a defense to infringement for certain prior users of commercial processes. Section 273(f) provides that "[i]f the defense under this section is pleaded by a person who subsequently fails to demonstrate a reasonable basis for asserting the defense, the court shall find the case exceptional for the purpose of awarding attorney fees under section 285." 35 U.S.C. 273(f) (Supp. V 2011).

[16] See, *e.g.*, *Martin*, 546 U.S. at 136 (generally allowing fee awards under 28 U.S.C. 1447(c) only if unsuccessful party's position was not "objectively reasonable"); *Zipes*, 491 U.S. at 761 (allowing fee awards against intervenor under 42 U.S.C. 2000e-5(k) only if intervention was "frivolous, unreasonable, or without foundation"); *Pierce* v. *Underwood*, 487 U.S. 552, 565 (1988) (allowing

of the party's position is only one of the factors that a district court may take into account when assessing whether to make such an award. In these circumstances, it is enough for the Court to explain that an award is appropriate if the district court determines that a case is exceptional and that the award is necessary to prevent gross injustice to the prevailing party. This guidance leaves a great deal to the discretionary judgment of the district court. But it is faithful to the text and history of Section 285, and it is similar to the kind of direction Congress and this Court have provided to lower courts in similar contexts.[17]

At a minimum, the Court should hold that the "objective baselessness" of a claim is not a freestanding

---

fee awards against the United States under 28 U.S.C. 2412(d)(1)(A)'s "substantially justified" standard only if government's position was not "justified to a degree that could satisfy a reasonable person"); *Christiansburg Garment Co.* v. *EEOC*, 434 U.S. 412, 421 (1978) (allowing fee awards against prevailing defendants under 42 U.S.C. 2000e-5(k) only if intervention was "frivolous, unreasonable, or without foundation").

[17] See, *e.g.*, 5 U.S.C. 504(a)(1) (authorizing fees when party's position was unreasonable or "special circumstances make an award unjust"); 11 U.S.C. 523(d) (same); 28 U.S.C. 1498(a) (same); 28 U.S.C. 2412(d)(1)(A) (same); Fed. R. Civ. P. 16(f) (similar); Fed. R. Civ. P. 37(a)(5)(A)(iii) (similar); *Hensley*, 461 U.S. at 429 (explaining that prevailing plaintiffs should recover fees under 42 U.S.C. 1988 (1988) "unless special circumstances would render such an award unjust") (citation omitted); *Northcross* v. *Board of Ed. of the Memphis City Schs.*, 412 U.S. 427, 428 (1973) (per curiam) (applying same standard to fee awards under 20 U.S.C. 1617 (1976)); *Newman* v. *Piggie Park Enters., Inc.*, 390 U.S. 400, 402 (1968) (per curiam) (applying same standard to fee awards to prevailing plaintiffs under 42 U.S.C. 2000a-3(b)); see also *Martin*, 546 U.S. at 139 (explaining that *Piggie Park* standard imposes meaningful limit on district court's discretion).

requirement for obtaining a fee award under Section 285. Rejecting such a requirement is consistent with the totality-of-circumstances approach applied between 1946 and 1952, and endorsed by Congress when it enacted Section 285. As explained above, district courts are always entitled to consider the unreasonableness of a claim—and its *degree* of unreasonableness—as valid factors, among others, in determining whether a fee award is warranted due to gross injustice in any particular case.

3. "Subjective bad faith" is not required

The "subjective bad faith" component of the Federal Circuit's two-prong test requires a prevailing defendant to prove that the unsuccessful plaintiff had "actual knowledge" that his claim was baseless. *iLOR*, 631 F.3d at 1377. Under that approach, a district court could not award Section 285 fees against an unsuccessful plaintiff, even if the court viewed the plaintiff's infringement claims as entirely frivolous, if the plaintiff believed in good faith that the claims had a realistic prospect of success. That cramped interpretation has no basis in the history of Section 285 or the original 1946 Act, which was construed to permit a broader equitable inquiry. See *Rohm & Haas*, 736 F.2d at 691 (quoting *Park-In-Theaters*, 190 F.2d at 142). Nor is it consistent with 35 U.S.C. 273(f) (Supp. V 2011), which requires a fee award under Section 285 based on an unreasonable litigating position but *without* requiring evidence of bad faith.

The government is not aware of any case in which the Court has construed a federal fee-shifting provision to require proof that an unsuccessful plaintiff against whom fees are sought was aware that his claims were baseless. Even the fee-shifting provisions

of the Civil Rights Act of 1964—which this Court has construed to require fee awards to prevailing plaintiffs in light of the strong federal policy "encourag[ing] individuals injured by racial discrimination to seek judicial relief," *Newman* v. *Piggie Park Enters., Inc.*, 390 U.S. 400, 402 (1968) (per curiam)—do not require such a showing before a defendant may recover its fees. See *Christiansburg Garment Co.* v. *EEOC*, 434 U.S. 412, 421 (1978) (holding that "a district court may in its discretion award attorney's fees to a prevailing defendant in a Title VII case upon a finding that the plaintiff's action was frivolous, unreasonable, or without foundation, even though not brought in subjective bad faith").[18] The courts of appeals likewise have generally rejected a "subjective bad faith" requirement for fee awards to prevailing defendants under the identical fee-shifting provision in the Lanham Act. See, *e.g.*, *Noxell*, 771 F.2d at 526 ("Something less than 'bad faith,' we believe, suffices to mark a case as 'exceptional.'").[19]

---

[18] See, *e.g.*, *Hughes* v. *Rowe*, 449 U.S. 5, 14 (1980) (per curiam) (applying same standard to prevailing defendants in civil rights actions under 42 U.S.C. 1983); *Zipes*, 491 U.S. at 758-760 (applying same standard to intervenors); see also *Martin*, 546 U.S. at 136-141 (requiring only an "objectively unreasonable" argument—without proof of bad faith—to justify fee award under fee-shifting provision of federal removal statute, 28 U.S.C. 1447(c)).

[19] See, *e.g.*, *Tamko*, 282 F.3d at 27 (rejecting bad-faith requirement); *Securacomm*, 224 F.3d at 279 (same); *Ale House Mgmt.*, 205 F.3d at 144 (rejecting bad-faith requirement for prevailing defendants); *Eagles*, 356 F.3d at 729 (indicating that no single factor is dispositive); *Hartman* v. *Hallmark Cards, Inc.*, 833 F.2d 117, 123 (8th Cir. 1987) (noting that "[b]ad faith is not a prerequisite"); *Stephen W. Boney, Inc.* v. *Boney Servs., Inc.*, 127 F.3d 821, 827 (9th Cir. 1997) (holding that "other exceptional circumstances"

To be sure, evidence of a plaintiff's subjective bad faith is highly *relevant* to the Section 285 analysis. Courts interpreting the fee-shifting provision of the 1946 Patent Act regularly indicated that bad-faith conduct was a valid basis for awarding fees, while making clear that it was not a freestanding requirement for such awards. As the Ninth Circuit explained in its influential *Park-In-Theatres* decision, a fee award "should be bottomed upon a finding of unfairness or bad faith in the conduct of the losing party, or some other equitable consideration of similar force." 190 F.2d at 142.[20] This Court should adopt a similar approach here.

4. "Clear and convincing" evidence is not required

The Federal Circuit's test also requires fee applicants to prove that their case is exceptional by "clear and convincing" evidence. See *Brooks Furniture*, 393 F.3d at 1382; *Machinery Corp. of Am.* v. *Gullfiber AB*, 774 F.2d 467, 471 (Fed. Cir. 1985). Nothing in the text or history of Section 285 justifies that heightened

---

besides bad faith may justify an award); *National Ass'n of Prof'l Baseball Leagues*, 223 F.3d at 1147 (rejecting bad-faith requirement for prevailing defendants); *Noxell*, 771 F.2d at 526 (same); but see Richard J. Leighton, *Awarding Attorneys' Fees In "Exceptional" Lanham Act Cases: A "Jumble" of "Murky" Law*, 102 Trademark Rep. 849, 867-869 (2012) (noting that some circuits require willful or bad-faith misconduct to justify fee awards to prevailing defendants).

[20] See, *e.g.*, *Faulkner* v. *Gibbs*, 199 F.2d 635 (9th Cir. 1952) (making clear that bad faith is not independently required); *Merrill*, 197 F.2d at 25 (same); *Wilson* v. *Seng Co.*, 194 F.2d 399, 404 (7th Cir. 1952) (same); *Krieger*, 106 F. Supp. at 131-132 (same); *Vischer*, 92 F. Supp. at 139 (describing purpose of fee award as being to penalize a plaintiff who brought suit "without justification *or* in bad faith") (emphasis added).

standard of proof. Cf. 35 U.S.C. 273(b) (Supp. V 2011) (requiring proof of a prior-user defense by "clear and convincing evidence"). Patent-infringement litigation in the United States is generally governed by the preponderance standard. See, *e.g.*, *Béné* v. *Jeantet*, 129 U.S. 683, 688 (1889) (concluding that "the complainants did not make out a case of infringement" because "[t]here is not a preponderance of evidence in their favor"). Proof by a preponderance of the evidence is the "standard generally applicable in civil actions" because it "allows both parties to 'share the risk of error in roughly equal fashion.'" *Herman & MacLean* v. *Huddleston*, 459 U.S. 375, 390 (1983) (quoting *Addington* v. *Texas*, 441 U.S. 418, 423 (1979)).

Challenges to the *validity* of a patent require proof by clear and convincing evidence. *Microsoft Corp.* v. *i4i Ltd. P'ship*, 131 S. Ct. 2238, 2242 (2011). But such challenges implicate the statutory presumption of validity, 35 U.S.C. 282 (2006 & Supp. V 2011), the expert judgments of the PTO, and the corresponding reliance interests of patentees and the public. These rationales do not apply to Section 285.

E. The Court Should Vacate The Federal Circuit's Judgment And Remand For Consideration Of Petitioner's Fee Request Under The Correct Standard

For the foregoing reasons, the Federal Circuit's interpretation of Section 285 unduly restricts the authority of district courts to award attorney's fees to prevailing parties in "exceptional" patent cases. Because the courts below rejected petitioner's request for attorney's fees under the Federal Circuit's erroneous test, see Pet. App. 20a-28a (district court); *id.* at 17a (court of appeals), it is appropriate to vacate the

court of appeals' judgment and remand for consideration of petitioner's fee request under the correct standard.

The government takes no position on whether a fee award is ultimately appropriate in this case. As explained above and in the government's amicus brief in *Highmark Inc.* v. *Allcare Health Management Systems, Inc.*, cert. granted, No. 12-1163 (oral argument scheduled for Feb. 26, 2014), the ultimate determination that a case is "exceptional" and justifies an award is vested by law in the sound discretion of the district court.

In assessing whether such an award is appropriate here, the district court is free to consider the various factors cited in petitioner's brief—including, for example, the reasonableness of respondents' claim construction and infringement allegations, its choice of venue, the scope of its discovery requests, and any alleged pattern of abusive patent litigation. The court may issue an award under Section 285 if it concludes that these considerations—independently or in combination—render this case "exceptional," such that it would be grossly unjust for petitioner to bear its own fees.

CONCLUSION

For the foregoing reasons, the judgment of the court of appeals should be vacated and the case remanded for further consideration of petitioner's fee request.

Respectfully submitted.

DONALD B. VERRILLI, JR.
Solicitor General
STUART F. DELERY
Assistant Attorney General
MALCOLM L. STEWART
Deputy Solicitor General
ROMAN MARTINEZ
Assistant to the Solicitor General
SCOTT R. MCINTOSH
MARK R. FREEMAN
Attorneys

NATHAN K. KELLEY
Solicitor and Deputy General Counsel
LORE A. UNT
JOSEPH MATAL
JAMIE L. SIMPSON
Associate Solicitors
United States Patent and Trademark Office

DECEMBER 2013

AMICUS CURIAE BRIEF

RECORD
AND
BRIEFS

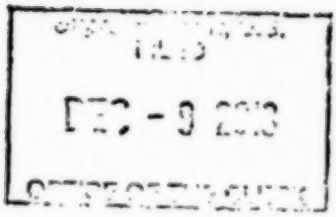

No. 12-1184

IN THE

Supreme Court of the United States

OCTANE FITNESS, LLC,
Petitioner,

v.

ICON HEALTH & FITNESS, INC.,
Respondent.

On Writ of Certiorari to the United States Court of Appeals for the Federal Circuit

BRIEF OF AMICUS CURIAE, AMERICAN INTELLECTUAL PROPERTY LAW ASSOCIATION IN SUPPORT OF NEITHER PARTY

WAYNE P. SOBON,
President
AMERICAN INTELLECTUAL
PROPERTY LAW
ASSOCIATION
241 18th Street, South
Suite 700
Arlington, VA 22202
(703) 415-0780

BARBARA A. FIACCO
Counsel of Record
DONALD R. WARE
MARCO J. QUINA
STEPHEN T. BYCHOWSKI
FOLEY HOAG LLP
155 Seaport Boulevard
Boston, MA 02210
(617) 832-1000
bfiacco@foleyhoag.com

December 9, 2013

Library of Congress
Law Library

TABLE OF CONTENTS

TABLE OF AUTHORITIES iii

STATEMENT OF INTEREST 1

SUMMARY OF ARGUMENT 2

ARGUMENT 4

I. The *Brooks Furniture* Test Limited the "Exceptional" Case Determination to Narrowly Defined Categories of Conduct. 5

II. The "Exceptional" Case Determination Should Be a Flexible and Discretionary Inquiry into Whether the Case Is an Exception to the Ordinary Patent Case. 9

A. Section 285 and its legislative history support broader discretion on the part of district judges. 10

B. A flexible, totality-of-the-circumstances approach comports with this Court's precedents 15

C. Longstanding pre-*Brooks Furniture* precedent supports a flexible, multifactor analysis. 18

D. The *Brooks Furniture* test sets a higher bar than tests that other circuit courts apply to identical statutory language in the Lanham Act.... 22

III. A Flexible Test is Consistent with the Practical Realities of Patent Litigation. 25

A. Patent litigation is a technically complex and expensive procedure that is susceptible to abuse..... 26

B. AIPLA's suggested totality-of-the-circumstances test will not undermine the intellectual property bar's ability to advocate with appropriate zeal on behalf of their clients. 31

CONCLUSION 33

TABLE OF AUTHORITIES

CASES

Bayer Aktiengesellschaft v. Duphar Int'l Research B.V.,
738 F.2d 1237 (Fed. Cir. 1984) 19

Blanc v. Spartan Tool Co.,
168 F.2d 296 (7th Cir. 1948) 14

Brooks Furniture Mfg., Inc. v. Dutailier Int'l, Inc.,
393 F.3d 1378 (Fed. Cir. 2005) ..... passim

Christiansburg Garment Co. v. EEOC,
434 U.S. 412 (1978) 7, 13, 16

Chambers v. NASCO, Inc.,
501 U.S. 32 (1991) 12

Cooter & Gell v. Hartmax Corp.,
496 U.S. 384 (1990) 7, 12

Deyerle v. Wright Mfg. Co.,
496 F.2d 45 (6th Cir. 1974) 19

eBay Inc. v. MercExchange, L.L.C.,
547 U.S. 388 (2006) 19

Eagles, Ltd. v. Am. Eagle Found.,
356 F.3d 724 (6th Cir. 2004) 23

Encomp, Inc. v. L-com, Inc.,
999 F. Supp. 264 (D. Conn. 1998) 22

Fogerty v. Fantasy, Inc.,
510 U.S. 517 (1994) 7

Hartman v. Hallmark Cards, Inc.,
833 F.2d 117 (8th Cir. 1987) 23

Highmark, Inc. v. Allcare Health Mgmt. Sys., Inc.,
701 F.3d 1351 (Fed. Cir. 2012) 26, 30

Holmberg v. Armbrecht,
327 U.S. 392 (1946) 19

Icon Health & Fitness, Inc. v. Octane Fitness, LLC,
No. 09-319, 2011 U.S. Dist. LEXIS 100113 (D. Minn. Sept. 6, 2011) 4, 17

Icon Health & Fitness, Inc. v. Octane Fitness, LLC,
496 Fed. Appx. 57 (Fed. Cir. 2012) 4

Kaehni v. Diffraction Co.,
342 F. Supp. 523 (D. Md. 1972) ..... passim

Lam, Inc. v. Johns-Manville Corp.,
718 F.2d 1056 (Fed. Cir. 1983) 20

Lincoln Elec. Co. v. Linde Air Prods. Co.,
74 F. Supp. 293 (N.D. Ohio 1947) 14

Lipscher v. LRP Publ'ns, Inc.,
266 F.3d 1305 (11th Cir. 2001) 23

Mach. Corp. of Am. v. Gullfiber AB,
774 F.2d 467 (Fed. Cir. 1985) 20

MarcTec, LLC v. Johnson & Johnson,
664 F.3d 907 (Fed. Cir. 2012) 17

Multiform Desiccants, Inc. v. Medzam Ltd.,
133 F.3d 1473 (Fed. Cir. 1998) 19

Nat'l Ass'n of Prof'l Baseball Leagues, Inc. v. Very Minor Leagues, Inc.,
223 F.3d 1143 (10th Cir. 2000) 23

Nightingale Home Health Care, Inc. v. Anodyne Therapy, LLC,
626 F.3d 958 (7th Cir. 2010) 23

Noxell Corp. v. Firehouse No. 1 Bar-B-Que Restaurant,
771 F.2d 521 (D.C. Cir. 1985) 11, 24, 32

Park-In-Theatres, Inc. v. Perkins,
190 F.2d 137 (9th Cir. 1951) 14

Patsy's Brand, Inc. v. I.O.B. Realty, Inc.,
317 F.3d 209 (2nd Cir. 2003) 23

Pierce v. Underwood,
487 U.S. 552 (1988) 6, 8, 12, 16

Procter & Gamble Co. v. Amway Corp.,
230 F.3d 519 (5th Cir. 2002) 23

Prof'l Real Estate Investors, Inc. v. Columbia Pictures Indus., Inc.,
508 U.S. 49 (1993) 7

Purer & Co. v. Aktiebolaget Addo,
410 F.2d 871 (9th Cir. 1969) 18

Reader's Digest Assoc. v. Conservative Digest, Inc.,
821 F.2d 800 (D.C. Cir. 1987) 23

Retail Servs. v. Freebies Publ'g.,
364 F.3d 535 (4th Cir. 2004) 23

Rohm & Haas Co. v. Crystal Chem. Co.,
736 F.2d 688 (Fed. Cir. 1984).....18

Rolls-Royce, Ltd. v. GTE Valeron Corp.,
800 F.2d 1101 (Fed. Cir. 1986).....22

Securacomm Consulting v. Securacom,
224 F.3d 273 (3rd Cir. 2000) 23

Sensonics, Inc. v. Aerosonic Corp.,
81 F.3d 1566 (Fed. Cir. 1996).....21

Stephen W. Boney, Inc. v. Boney Servs.,
127 F.3d 821 (9th Cir. 1997) 23

Symbol Techs., Inc. v. Lemelson Med.,
277 F.3d 1361 (Fed. Cir. 2002)..... 15

Tamko Roofing Prods., Inc. v. Ideal Roofing Co., Ltd.,
282 F.3d 23 (1st Cir. 2002).....23

Taurus IP, LLC v. Daimlerchrysler Crop.,
726 F.3d 1306 (Fed. Cir. 2013).....17

Tenneco Chems., Inc. v. Wm. T. Burnett & Co.,
Nos. 73-266, 74-1250, 75-394, 77-1941, 1980 U.S. Dist. LEXIS 17037 (D. Md. Nov. 3, 1980).....22

Upjohn Co. v. United States,
449 U.S. 383 (1981) 18

Weinberger v. Romero-Barcelo,
456 U.S. 305 (1982) 19

STATUTES

15 U.S.C. § 1117(a) 22

28 U.S.C. § 1927 12

35 U.S.C. § 285 ..... passim

Pub. L. No. 587, 60 Stat. 778 13

Pub. L. No. 82-593, 66 Stat. 792 14

RULES

Fed. R. Civ. P. 11 ..... 5, 12

Sup. Ct. R. 37.3(a) 2

Sup. Ct. R. 37.6 1

LEGISLATIVE MATERIALS

Improving the Patent System to Promote American Innovation and Competitiveness: Recovery in Patent Infringement Suits: Hearing on H.R. 5231 Before the Comm. on Patents, 79th Cong. (1946) 28

S. Rep. No. 79-1503 (1946), *reprinted in* 1946 U.S. Code Congressional Service 1386 ..... 13, 30

S. Rep. No. 82-1979 (1952), *reprinted in* 1952 U.S.C.C.A.N. 2394 14

OTHER AUTHORITIES

Alan M. Ahart, *Attorneys' Fees: the Patent Experience*, 57 J. Pat. Off. Soc'y 608 (1975) 29

Am. Intellectual Prop. Law Ass'n, *Report of the Economic Survey* (2001) 26

Am. Intellectual Prop. Law Ass'n, *Report of the Economic Survey* (2013) 26

Emery G. Lee & Thomas E. Willging, Fed. Judicial Ctr., *Litgation Costs in Civil Cases: Multivariate Analysis* (2010), *available at* www.fjc.gov/public/pdf.nsf/lookup/costciv1.pdf/$file/costciv1.pdf 27

Harold C. Wegner, *The Disclosure Requirements of the 1952 Patent Act: Looking Back and a New Statute for the Next Fifty Years*, 37 Akron L. Rev. 243 (2004) 15

P.J. Federico, *Commentary on the New Patent Act*, 75 J. Pat & Trademark Off. Soc'y 161 (1993)...15

PricewaterhouseCoopers, *2013 Patent Litigation Study* (2013), *available at* http://www.pwc.com/en_US/us/forensic-services/publications/assets/2013-patent-litigation-study.pdf.....26

Randall R. Rader et al., *Make Patent Trolls Pay in Court*, N.Y. Times, June 4, 2013, at A25 31

Randall R. Rader, *The State of Patent Litigation*, 21 Fed. Cir. B.J. 331 (2011-2012) 31

Webster's New Collegiate Dictionary 287 (1949) 11

Webster's Third New International Dictionary 791 (2002) 11

STATEMENT OF INTEREST

The American Intellectual Property Law Association ("AIPLA") is a voluntary bar association with approximately 15,000 members who are lawyers in both private and corporate practice, judges, patent agents, academics, law students, and USPTO professionals. Our members practice in a wide and diverse spectrum of intellectual property fields, including patent, trademark, copyright, and unfair competition law, as well as other fields of law affecting intellectual property. They represent both owners and users of intellectual property, as well as those who litigate and prosecute before patent and trademark offices, giving AIPLA a unique and varied perspective on patent litigation practices.[1]

AIPLA has no interest in any party to this litigation or stake in the outcome of this case, other than its interest in seeking a correct and consistent

---

[1] In accordance with Supreme Court Rule 37.6, AIPLA states that this brief was not authored, in whole or in part, by counsel to a party, and that no monetary contribution to the preparation or submission of this brief was made by any person or entity other than AIPLA or its counsel. After reasonable investigation, AIPLA believes that (i) no member of its Board or *Amicus* Committee who voted to file this brief, or any attorney in the law firm or corporation of such a member, represents a party to this litigation in this matter, (ii) no representative of any party to this litigation participated in the authorship of this brief, and (iii) no one other than AIPLA, or its members who authored this brief and their law firms or employers, made a monetary contribution to the preparation or submission of this brief.

interpretation of the law affecting intellectual property.[2]

SUMMARY OF ARGUMENT

Section 285 of the Patent Act authorizes district judges, in the exercise of their discretion, to award attorneys' fees in patent cases: "The court in exceptional cases may award reasonable attorney fees to the prevailing party." 35 U.S.C. § 285. This brief is submitted by AIPLA as *amicus curiae* in support of neither party to urge the Court to overrule the unduly rigid standard for determining that a case is "exceptional" created by the Court of Appeals for the Federal Circuit in *Brooks Furniture Manufacturing, Inc. v. Dutailier International, Inc.*, 393 F.3d 1378 (Fed. Cir. 2005) and applied in this case. Under the *Brooks Furniture* test, exceptional cases only include those that involve conduct in one of a few discrete categories: material litigation misconduct, willful infringement, fraud on the Patent Office, or objectively baseless litigation brought in bad faith.

The Federal Circuit's test is contrary to the plain meaning of Section 285, and it does not comport with Congress's intent in enacting the statute. It is also inconsistent with this Court's precedent, contrary to the weight of over fifty years of prior decisions, and

---

[2] AIPLA sought consent to file this brief from the counsel of record for all parties, pursuant to Supreme Court Rule 37.3(a). Counsel for all parties consented and copies of the letters of general consent have been filed with the Clerk.

ineffective in the face of the practical realities of patent litigation today.

In short, the Federal Circuit has set the bar far too high. As a consequence, Section 285 is rarely used. It is an ineffective tool for district courts to manage litigation conduct, because it can be invoked in only the rarest and most egregious of cases, despite rising concerns today about the impact of patent litigation abuses on innovation and the economy. As currently interpreted by the Federal Circuit, Section 285 does not meaningfully deter unreasonable, inefficient, and overzealous advocacy by patent litigants.

AIPLA urges this Court to recalibrate the exceptional case standard, returning it to where Congress rightfully placed it: within the broad, equitable discretion of the district courts. Giving a natural meaning to the statutory term "exceptional," the inquiry should be simply whether the case as litigated is an exception to the ordinary patent case, such that the prevailing party should not be forced to bear all of its attorneys' fees. This determination should be a flexible and equitable exercise of judicial discretion that takes account of the totality of the circumstances. While some factors may weigh more heavily than others, none should be required or necessarily control the analysis.

This approach not only comports with the language of Section 285, but also best carries out Congress's intent. It appropriately places discretion in the district courts to bring their experience, perspective, and hands-on knowledge of the case to

bear. It discourages inappropriate conduct by patent litigants and provides the district courts a meaningful case management tool.

Section 285, under the Federal Circuit's *Brooks Furniture* test, has become a "hardly ever" rule. It should not so remain. AIPLA respectfully urges this Court to reinstate the flexible exercise of discretion standard that the statute plainly mandates.

ARGUMENT

The district court's decision below is the latest in a line of cases applying a formulaic test under which a case can be found "exceptional" within the meaning of Section 285 only in narrowly defined circumstances. *Icon Health & Fitness, Inc. v. Octane Fitness, LLC*, No. 09-319, 2011 U.S. Dist. LEXIS 100113, at *3 (D. Minn. Sept. 6, 2011). Constrained by Federal Circuit precedent, the district court here did not consider the totality of the circumstances nor did it weigh equitable considerations in its analysis. Instead, the district court considered only whether the patentee's claims were both objectively baseless and brought in bad faith. *Id.* at *3-9. Applying this standard, the district court found that the case was not exceptional and denied fees under Section 285, a decision the Federal Circuit summarily affirmed. *Icon Health & Fitness, Inc. v. Octane Fitness, LLC*, 496 Fed. Appx. 57, 65 (Fed. Cir. 2012).

The analysis of the district court and Federal Circuit in this case—as well as the Federal Circuit precedent upon which it is based—narrows Section 285 far beyond the plain meaning of the statute,

undermining its efficacy and defeating the intent of Congress in enacting it. It is time for this Court to reset the balance and restore the statute to its proper role.

I. The *Brooks Furniture* Test Limited the "Exceptional" Case Determination to Narrowly Defined Categories of Conduct.

The limited application of Section 285 began in 2005 with *Brooks Furniture Manufacturing, Inc. v. Dutailier International, Inc.*, 393 F.3d 1378 (Fed. Cir. 2005), in which the Federal Circuit articulated, for the first time, a formulaic approach to the exceptional case analysis under which a case could be found "exceptional" only in narrowly defined circumstances.

Under *Brooks Furniture*, a case may be deemed exceptional if there was material misconduct (i) involving the patent (either inequitable conduct in procuring the patent or willful infringement of it by the accused infringer) or (ii) involving the conduct of the litigation. *Id.* at 1381. To define material "misconduct in the litigation," the Federal Circuit referred to "conduct that violates Fed. R. Civ. P. 11, or like infractions." *Id.*

Absent material misconduct involving either the patent or the litigation, under *Brooks Furniture* a case may be deemed exceptional with regard to a prevailing defendant ***only*** if a strict two-prong test is satisfied: (1) the litigation was brought in subjective bad faith, and (2) the litigation is objectively baseless. *Id.* In essence, absent otherwise

sanctionable misconduct, the prevailing defendant must prove that the plaintiff filed a baseless complaint in bad faith.

Thus, after *Brooks Furniture*, a prevailing party can establish exceptionality only if it can check one of the following boxes: (1) "material litigation misconduct," (2) willful infringement, (3) inequitable conduct, or (4) objectively baseless litigation brought in bad faith.[3] A district court is forbidden from finding an exceptional case for any other reasons. Nor may a court aggregate marginal conduct within multiple categories that steps right up to, but not across, the line.

Strikingly, in its articulation of the new standard, *Brooks Furniture* did not rely on the traditional primary sources of statutory interpretation: the statutory language and its legislative history. *Cf. Pierce v. Underwood*, 487 U.S. 552, 564 (1988) ("[W]e do not think it appropriate to substitute for the formula that Congress has adopted any judicially crafted revision of it ....").

Instead, the Federal Circuit relied on this Court's decision in *Professional Real Estate Investors, Inc. v. Columbia Pictures Industries, Inc.*, 508 U.S. 49, 60-61 (1993) ("*PRE*"). But *PRE* did not involve attorneys' fees, much less Section 285 of the

---

[3] It is unclear what *Brooks Furniture*'s bad-faith, objectively baseless litigation category adds, given that material litigation misconduct is sufficient.

Patent Act. In *PRE*, this Court articulated the standard under which a lawsuit would be considered a "sham" in the antitrust context, thereby taking it outside of the *Noerr-Pennington* immunity doctrine. *Id.* But, nowhere does *PRE* state that this is the standard that will henceforth apply to ***any*** analysis of a claim of questionable basis, let alone a request for fee-shifting.

There is a significant difference between asserting an antitrust claim that challenge's a party's petitioning activity and requesting fee shifting under federal laws and court rules. Fee shifting is a tool for courts to control the conduct of the parties, to sanction litigation misconduct, or to shift the risks and burdens of particular litigation in order to encourage or discourage certain types of behavior. *See, e.g., Fogerty v. Fantasy, Inc.*, 510 U.S. 517, 522-25 (1994); *Cooter & Gell v. Hartmarx Corp.*, 496 U.S. 384, 393 (1990). Fee shifting does not subject a party to the same liability as an antitrust claim, and it does not raise the same risk of chilling otherwise legitimate petitioning activity protected by the First Amendment. There is no reason as a matter of course to apply the heightened *PRE* "sham" litigation standard to statutory fee-shifting provisions. *Cf. Christiansburg Garment Co. v. EEOC*, 434 U.S. 412, 419 (1978) (refusing to read subjective bad faith element into fee-shifting statute). In other words, a party's constitutional right to petition by filing a complaint does not insulate that party from a court's exercise of statutory authority to award fees to the prevailing party at the end of the case, based upon the totality of circumstances.

Nor does *Brooks Furniture* explain why material litigation misconduct, willful infringement, fraud on the patent office, or objectively baseless litigation brought in bad faith are the ***only*** circumstances that can make a case exceptional. This Court has eschewed mechanical rules when it comes to awarding fees, explaining that "because the number of possible situations is large, we are reluctant either to fix or sanction narrow guidelines for the district courts to follow." *Pierce*, 487 U.S. at 562.

The Federal Circuit's *Brooks Furniture* test sets the bar too high, tying the hands of district judges in exercising the equitable power conferred upon them by Congress. Under *Brooks Furniture*, if a party has a claim or defense that is not "objectively baseless," it can engage in a pattern of questionable conduct so long as its behavior does not rise to the level of a Rule 11 violation "or like infraction." The district court cannot make an exceptional case determination even if the prevailing party shows that its adversary's pattern of questionable conduct was in bad faith. Nor can the district court make an exceptional case determination even if the patentee's conduct was designed to extract a settlement by pursuing a palpably weak, but not utterly baseless, nuisance claim in a vexatious or unreasonable manner. Conversely, the district court is precluded from making an exceptional case determination in favor of a patent holder even where a defendant asserts weak invalidity or inequitable conduct defenses to increase costs or protract the litigation from enforcing a valid patent, thereby dissuading the patent holder, by sheer attrition. The district court's discretion should not be so shackled.

II. The "Exceptional" Case Determination Should Be a Flexible and Discretionary Inquiry into Whether the Case Is an Exception to the Ordinary Patent Case.

AIPLA recommends that this Court adopt a flexible approach to fee awards in patent cases, allowing district courts to make an exceptional case determination when, under the totality of the circumstances, equity and fairness dictate that the entirety of fees should not be borne by the prevailing party. The touchstone should be the statute's mandate of exceptionality: is the case at hand an exception to the ordinary one? In reaching this determination, a court should consider and weigh all the facts and circumstances. While some factors may weigh more heavily than others, no one factor should be required or control.

This approach will properly reset the balance. A party who unnecessarily increases the costs of litigation or otherwise acts in a manner outside the norm should risk some (or all) of the consequences of such choices. The rigidity of the *Brooks Furniture* test has placed the fulcrum point at "exceedingly rare" circumstances, well beyond ordinary, reaching only those instances of extreme abuse or bad faith. The exceptional case standard should not be interpreted as a "hardly ever" rule, cabining district courts with a narrow checklist of compartmentalized criteria.

The intent of Congress in enacting Section 285 was to displace the absolute application of the American Rule and encourage the award of

attorneys' fees in exceptional cases. The Federal Circuit's narrow interpretation of Section 285, however, has resulted in fee shifting in only the rarest and most unusual cases: those where the losing party has engaged in highly culpable conduct such as objectively baseless litigation brought in bad faith, willful infringement, fraud on the patent office, or Rule 11 or like misconduct. While the granting of fees should be the exception to the ordinary case, it should not be so rare that Section 285 becomes, as it is now, a paper tiger. Section 285 should not be reduced to a mechanical and impotent tool that courts are unable to employ effectively in managing the conduct of patent litigation. AIPLA's suggested approach to the exceptional case standard—unlike the *Brooks Furniture* test—is consistent with the statute, its legislative history, and the weight of authority.

A. Section 285 and its legislative history support broader discretion on the part of district judges.

The language and legislative history of Section 285 support allowing district courts flexibility and discretion in determining whether a case litigated before them should be treated as an exception to the ordinary patent case.

The text of Section 285 confirms Congress's intent to confer broad discretion on district courts. It provides that "[t]he court in ***exceptional cases may award*** reasonable attorney fees to the prevailing party." 35 U.S.C. § 285 (emphasis added). The plain meaning of "exceptional" is uncommon or unusual.

Webster's Third New International Dictionary 791 (2002); *Webster's New Collegiate Dictionary* 287 (1949) (defining "exceptional" as "uncommon"). The word "exceptional" "is most reasonably read to mean what the word is generally understood to indicate—uncommon, not run-of-the-mine." *Noxell Corp. v. Firehouse No. 1 Bar-B-Que Rest.*, 771 F.2d 521, 526 (D.C. Cir. 1985) (Ginsburg & Scalia, JJ.) (construing "exceptional" in the identically worded fee-shifting provision of the Lanham Act).

The Congressional mandate limiting fee awards to "exceptional" cases in Section 285 entrusts district judges with discretion to draw upon their years of experience and hands-on involvement in determining, after a case ends, whether under all the circumstances it should be viewed as an exception to the ordinary patent case. "Exceptional" is a flexible and relativistic term that demands comparison to that which is ordinary or common. The plain meaning of the term is betrayed by an exacting and rigid hurdle divorced from the practical realities of patent litigation. Indeed, Section 285's provision that the court "***may*** award reasonable attorney fees" further confirms that Congress intended a flexible and discretionary inquiry. 35 U.S.C. § 285 (emphasis added).

There is no reason to replace, as did the Federal Circuit in *Brooks Furniture*, the statutory language with judicially-crafted requirements of "misconduct in conduct of litigation or in securing the patent" or "objective baselessness" necessarily combined with "subjective bad faith." Those words are nowhere found in the statute and unduly constrain its

broader text. As this Court explained in *Pierce v. Underwood*,

> [W]e do not think it appropriate to substitute for the formula that Congress has adopted any judicially crafted revision of it .... "Substantially justified" is the test the statute prescribes, and the issue should be framed in those terms.

487 U.S. 552, 564 (1988).

In fact, the Federal Circuit's requirement of otherwise sanctionable litigation misconduct or subjective bad faith renders Section 285 entirely superfluous. District courts already had discretion to award fees for bad faith and vexatious litigation. *See Cooter & Gell v. Hartmax Corp.*, 496 U.S. 384, 392-93 (1990); *see also Chambers v. NASCO, Inc.*, 501 U.S. 32, 45-46 (1991) ("[A] court may assess attorney's fees when a party has acted in bad faith, vexatiously, wantonly, or for oppressive reasons." (internal quotation marks omitted)); 28 U.S.C. § 1927 (any attorney who multiplies proceedings unreasonably and vexatiously may be required by the court to satisfy personally the excess costs, expenses, and attorneys' fees); Fed. R. Civ. P. 11. That is the very reason this Court refused to read a subjective bad faith requirement into the fee-shifting provision of Title VII of the Civil Rights Act of 1964:

> It seems clear ... that in enacting [the statute] Congress did not intend to permit the award of attorney's fees to a prevailing defendant only in a situation where the plaintiff was

> motivated by bad faith in bringing the action.... [I]f that had been the intent of Congress, no statutory provision would have been necessary, for it has long been established that even under the American common-law rule attorney's fees may be awarded against a party who has proceeded in bad faith.

Christiansburg Garment Co. v. EEOC, 434 U.S. 412, 419 (1978).

The legislative history of Section 285 reinforces the statute's prescription of a flexible and discretionary standard. Section 285 originated in the 1946 Patent Act, which, for the first time, codified attorneys' fees in patent cases. Pub. L. No. 587, 60 Stat. 778. The 1946 Act expressly conferred upon district courts the discretion to award fees, providing that "[t]he court may ***in its discretion*** award reasonable attorney's fees." *Id.* (emphasis added). The Senate Report states that the statute encompassed prevailing accused infringers "so as to enable the court to prevent a gross injustice." S. Rep. No. 79-1503 (1946), *reprinted in* 1946 U.S. Code Congressional Service 1386, 1387.

Court decisions rendered soon after enactment of the 1946 Act further illuminate its intended meaning. In *Lincoln Electric Co. v. Linde Air Products Co.*, decided only a year after enactment of the 1946 Act, a court recognized that its decision was bound not by a prescribed test, but by the legislative directive to award fees in cases that were the exception to the ordinary case under principles of

justice. 74 F. Supp. 293, 294 (N.D. Ohio 1947), *aff'd*, 171 F.2d 223 (6th Cir. 1948):

> It is apparent from the wording of the statute and its history that an award of attorneys' fees should not be made in an ordinary case. The court is invested with discretionary power where it is necessary to prevent gross injustice.

Id.; *see also Blanc v. Spartan Tool Co.*, 168 F.2d 296, 300 (7th Cir. 1948) (stating that it is "clear that under the statute the question is one of discretion" and "[t]he court exercised its discretion and that ends the matter"); *Park-In-Theatres, Inc. v. Perkins*, 190 F.2d 137, 142 (9th Cir. 1951) ("The exercise of discretion ... should be bottomed upon a finding of unfairness or bad faith in the conduct of the losing party, or some other equitable consideration of similar force ....").

The fee-shifting provision of the 1946 Act was amended and recodified as Section 285 of the 1952 Patent Act, Pub. L. No. 82-593, 66 Stat. 792, 813. The 1952 amendment added the phrase "in exceptional cases," and replaced "in its discretion" with "may." Neither of these changes was intended to alter the statute's meaning. These amendments were intended to "express[] the intention of the [1946 Act] ... as interpreted by the courts." S. Rep. No. 82-1979 (1952), *reprinted in* 1952 U.S.C.C.A.N. 2394, 2423. As one of the original drafters of the 1952 Act explained, "Section 285, providing for the recovery of attorney fees by the prevailing party, is substantially the same as the corresponding sentence of the old

statute." P.J. Federico, *Commentary on the New Patent Act*, 75 J. Pat & Trademark Off. Soc'y 161, 216 (1993).[4]

More than a half century later, in its *Brooks Furniture* decision, the Federal Circuit deviated from the plain language and legislative history of Section 285. In doing so, the Federal Circuit transformed a discretionary case management tool into an inflexible, formulaic requirement under which relief is very rarely granted, even in cases that are outside the ordinary. AIPLA's proposed interpretation will restore the intended scope of the statute.

B. A flexible, totality-of-the-circumstances approach comports with this Court's precedents.

AIPLA's suggested approach also comports with this Court's precedent, which has rejected the

---

[4] P. J. Federico was one of the 1952 Act's original drafters. His commentary was included in the annotated version of volume 35 of the U.S. Code for many years, and when the West Publishing Company ended this practice it was reprinted in the Journal of the Patent and Trademark Office Society. *See generally* Harold C. Wegner, *The Disclosure Requirements of the 1952 Patent Act: Looking Back and a New Statute for the Next Fifty Years*, 37 Akron L. Rev. 243, 243 n.1 (2004). Federico's commentary was reviewed by the other drafters of the 1952 Act prior to its publication and the Federal Circuit has referred to Federico's commentary as "an invaluable insight into the intentions of the drafters of the Act." *Symbol Techs., Inc. v. Lemelson Med.*, 277 F.3d 1361, 1366 (Fed. Cir. 2002).

imposition of a subjective bad faith gloss or other rigid tests on fee shifting statutes. In *Christiansburg Garment Co. v. EEOC*, 434 U.S. 412, 413 (1978), this Court considered the standard for discretionary fee-shifting in favor of prevailing defendants under Title VII of the Civil Rights Act of 1964. The Court rejected arguments that fees should be available either as a matter of course or only upon a showing of bad faith litigation. *Id.* at 417-18. Instead, to effectuate Congress's intent to "protect defendants from burdensome litigation having no legal or factual basis," *id.* at 420, the Court took an intermediate approach, holding that "a district court may in its discretion award attorney's fees to a prevailing defendant ... upon a finding that the plaintiff's action was frivolous, unreasonable, or without foundation, even though not brought in subjective bad faith." *Id.* at 421. The Court also emphasized that it would not interpret a fee-shifting statute in a way that renders it superfluous to existing remedies for bad faith conduct. *Id.* at 419.

In *Pierce v. Underwood*, 487 U.S. 552, 562 (1988), this Court explained that determining whether fees should be shifted under the Equal Access to Justice Act as a result of the government's litigating position "is precisely such a multifarious and novel question" that is "little susceptible, for the time being at least, of useful generalization." As the Court further explained, "because the number of possible situations is large, we are reluctant either to fix or sanction narrow guidelines for the district courts to follow." *Id.*

AIPLA's practical, totality-of-the-circumstances approach is wholly consistent with these cases, while *Brooks Furniture* runs afoul of both. Departing from *Pierce*'s guidance, the Federal Circuit has provided ill-advised, narrow strictures on district courts' consideration of the differing circumstances that may render a case exceptional. Contrary to this Court's rationale in *Christiansburg*, *Brooks Furniture* imposes a subjective bad faith requirement onto the analytic framework of Section 285. The Federal Circuit requires, absent material litigation or patent-related misconduct, that the prevailing party show, by clear and convincing evidence, that its adversary ***knew*** its allegations were baseless but pursued them anyway. *See Taurus IP, LLC v. Daimlerchrysler Crop.*, 726 F.3d 1306, 1328-29 (Fed. Cir. 2013); *MarcTec, LLC v. Johnson & Johnson*, 664 F.3d 907, 916 (Fed. Cir. 2012).

Faced with the requirement of establishing knowledge of the baselessness of the other party's claim, a prevailing party seeking fees must provide evidence of the state of mind of its adversary's key decision-makers and litigation counsel. *See, e.g.*, *Icon Health & Fitness, Inc. v. Octane Fitness, LLC*, No. 09-319, 2011 U.S. Dist. LEXIS 100113, at *11-12 (D. Minn. Sept. 6, 2011). Applying a bad-faith standard in this context is nearly impossible, and there are strong, well-established policy reasons why discovery into the mental state of a party's litigation counsel and party representatives overseeing the litigation should be limited. *See Upjohn Co. v. United States*, 449 U.S. 383, 398 (1981) (discovery of "attorney's thoughts" would result in "[i]nefficiency,

unfairness and sharp practices," "[t]he effect on the legal profession would be demoralizing," "[a]nd the interests of the clients and the causes of justice would be poorly served" (quoting *Hickman v. Taylor*, 329 U.S. 495, 511 (1947)). For these reasons, a subjective bad-faith inquiry should not be a threshold for defining what constitutes an "exceptional case" for attorneys' fee awards.

C. Longstanding pre-*Brooks Furniture* precedent supports a flexible, multifactor analysis.

Prior to *Brooks Furniture*, the Federal Circuit (and before its creation, its sister circuits) drew on the legislative history of Section 285 and recognized that the exceptional case determination is an exercise of equitable discretion. *E.g.*, *Rohm & Haas Co. v. Crystal Chem. Co.*, 736 F.2d 688, 690 (Fed. Cir. 1984) (Section 285 intended to "further equitable considerations"); *Purer & Co. v. Aktiebolaget Addo*, 410 F.2d 871, 880 (9th Cir. 1969) ("The exercise of discretion in favor of an allowance of attorneys' fees should be based upon a finding of unfairness or bad faith in the conduct of the losing party, or some other equitable consideration of equal force ...."); *Kaehni v. Diffraction Co.*, 342 F. Supp. 523, 534 (D. Md. 1972) (the judicial approach is "one of equity"), *aff'd*, 473 F.2d 908 (4th Cir. 1973).

As this Court has explained, "[t]he essence of equity jurisdiction has been the power ... to mould each decree to the necessities of the particular case. Flexibility rather than rigidity has distinguished it." *Weinberger v. Romero-Barcelo*, 456 U.S. 305, 312

(1982) (quoting *Hecht Co. v. Bowles*, 321 U.S. 321, 329 (1944)); *see also Holmberg v. Armbrecht*, 327 U.S. 392, 396 (1946) ("Equity eschews mechanical rules; it depends on flexibility."). Thus, in the patent context, this Court has firmly rejected categorical rules for making equitable determinations. *See eBay Inc. v. MercExchange, L.L.C.*, 547 U.S. 388, 393 (2006).

Consistent with these principles, prior to *Brooks Furniture*, courts employed a flexible array of considerations under Section 285. Courts, including the Federal Circuit, looked for indications of fraud, malice, and bad faith, and considered whether conduct was inequitable, unconscionable, vexatious, harassing, frivolous, or unjustified. *See, e.g., Bayer Aktiengesellschaft v. Duphar Int'l Research B.V.*, 738 F.2d 1237, 1242 (Fed. Cir. 1984) (collecting cases); *Deyerle v. Wright Mfg. Co.*, 496 F.2d 45, 54-55 (6th Cir. 1974).

Appellate courts did not impose a definitive or exclusive list; instead, they left open the possibility of additional considerations based on general principles of equity. *E.g., Multiform Desiccants, Inc. v. Medzam Ltd.*, 133 F.3d 1473, 1481-82 (Fed. Cir. 1998) ("Findings of exceptional case have been based on a variety of factors; for example, willful or intentional infringement, inequitable conduct before the Patent and Trademark Office, vexatious or unjustified litigation, or other misfeasant behavior."); *Mach. Corp. of Am. v. Gullfiber AB*, 774 F.2d 467, 471 (Fed. Cir. 1985) (fees warranted upon a "finding of unfairness or bad faith in the conduct of the losing party, or some other equitable

consideration of similar force, which makes it grossly unjust that the winner of the particular law suit be left to bear the burden of his counsel fees which prevailing litigants normally bear" (quoting *Park-In-Theatres, Inc. v. Perkins*, 190 F.2d 137, 142 (9th Cir. 1951)).

One well-reasoned early case employing this open-ended, multi-factor approach is *Kaehni v. Diffraction Co.*, 342 F. Supp. 523 (D. Md. 1972), a case affirmed *per curium* by the Fourth Circuit, 473 F.2d 908 (4th Cir. 1973), and twice cited with approval by the Federal Circuit. *Mach. Corp.*, 774 F.2d at 474; *Lam, Inc. v. Johns-Manville Corp.*, 718 F.2d 1056, 1069 (Fed. Cir. 1983). In *Kaehni*, the district court considered whether a case can be "'exceptional' within the meaning of Section 285 where the allegation of infringement is frivolous and/or asserted without reasonable care and sufficient justification." 342 F. Supp. at 535. The district court did not limit itself to a fixed list; rather it considered the facts and circumstances of the case. In doing so, the court held that the case was exceptional and awarded fees based on its consideration of a multitude of interrelated factors, including:

- The lack of closeness of the question of infringement,
- Plaintiffs' failure to use "reasonable care in assessing their infringement allegation prior to bringing suit,"

- Plaintiffs' "lack of candor" responding to discovery,
- "Plaintiffs' delay in bringing suit,"
- "The prolonged discovery and pretrial proceedings,"
- Plaintiffs' failure "to produce at trial a scientific expert to testify in support of their theory of infringement,"
- "Plaintiffs' conduct throughout the entire history of [the] case," and
- Defendant's contrasting conduct "do[ing] everything in its power to end the litigation and avoid its enormous cost."

Id.

As exemplified by *Kaehni*, courts did not evaluate relevant factors in isolation, compartmentalized into separate and discrete categories, as *Brooks Furniture* now mandates. Instead, courts considered the totality of the circumstances. *See Sensonics, Inc. v. Aerosonic Corp.*, 81 F.3d 1566, 1574-75 (Fed. Cir. 1996) ("Bad faith and willful infringement are not the only criteria whereby a case may be deemed to be 'exceptional,' although when either is present the requirement is more readily met.... Indeed, the court may consider the litigation actions of both sides in connection with § 285."); *Rolls-Royce, Ltd. v. GTE Valeron Corp.*, 800 F.2d 1101, 1111 (Fed. Cir. 1986) ("[B]ad faith, fraud, and malice are not

required, and misconduct (*e.g.*, frivolity; harassing tactics) may suffice ...."); *Encomp, Inc. v. L-com, Inc.*, 999 F. Supp. 264, 265 (D. Conn. 1998) ("The movant must demonstrate the exceptional nature of the case by clear and convincing evidence viewed in light of the totality of the circumstances."). This approach allowed courts to consider conduct in the aggregate—even if conduct in individualized categories might not cross the line. *See, e.g.*, *Tenneco Chems., Inc. v. Wm. T. Burnett & Co.*, Nos. 73-266, 74-1250, 75-394, 77-1941, 1980 U.S. Dist. LEXIS 17037, at *45-46 (D. Md. Nov. 3, 1980) (considering aggregated conduct).

In *Brooks Furniture*, the Federal Circuit deviated from the steady course of over half a century of precedent. This Court should reverse the Federal Circuit's attempt to impose rigid, categorical rules on a determination that should be made by the district courts as an exercise of equitable discretion.

D. The *Brooks Furniture* test sets a higher bar than tests that other circuit courts apply to identical statutory language in the Lanham Act.

Section 35(a) of the Lanham Act states, in language identical to Section 285 of the Patent Act, that "[t]he court in exceptional cases may award reasonable attorney fees to the prevailing party." 15 U.S.C. § 1117(a). The meaning of the exceptional case provision of the Lanham Act is not before the Court. But the approaches taken by other circuit courts of appeals in applying the Lanham Act provide a useful lens through which to view *Brooks*

Furniture. While there is variation among the circuits concerning the Lanham Act's "exceptional case" fee-shifting provision, not a single circuit court of appeals requires that a prevailing party prove ***both***: (1) bad faith; ***and*** (2) that the litigation was objectively baseless to establish an exceptional case under the Lanham Act.[5] The Federal Circuit's interpretation of the identical provision in the Patent Act is an outlier and its restrictive standard should be rejected.

As then-Circuit Judge Ginsberg, joined by then-Circuit Judge Scalia, analyzed the term "exceptional case" under the Lanham Act:

> While the legislative history, thin as it is, supplies no clearly right answer to the

---

[5] The Seventh Circuit sets forth the various tests employed by its sister circuits in *Nightingale Home Health Care, Inc. v. Anodyne Therapy, LLC*, 626 F.3d 958, 960-61 (7th Cir. 2010). *See also Tamko Roofing Prods., Inc. v. Ideal Roofing Co., Ltd.*, 282 F.3d 23, 32 (1st Cir. 2002); *Patsy's Brand, Inc. v. I.O.B. Realty, Inc.*, 317 F.3d 209, 221-22 (2d Cir. 2003); *Securacomm Consulting v. Securacom*, 224 F.3d 273, 280 (3d Cir. 2000); *Retail Servs. v. Freebies Publ'g*, 364 F.3d 535, 550 (4th Cir. 2004); *Procter & Gamble Co. v. Amway Corp.*, 280 F.3d 519, 527-28 (5th Cir. 2002); *Eagles, Ltd. v. Am. Eagle Found.*, 356 F.3d 724, 728 (6th Cir. 2004); *Hartman v. Hallmark Cards, Inc.*, 833 F.2d 117, 123 (8th Cir. 1987); *Stephen W. Boney, Inc. v. Boney Servs.*, 127 F.3d 821, 827 (9th Cir. 1997); *Nat'l Ass'n of Prof'l Baseball Leagues, Inc. v. Very Minor Leagues, Inc.*, 223 F.3d 1143, 1147 (10th Cir. 2000); *Lipscher v. LRP Publ'ns, Inc.*, 266 F.3d 1305, 1320 (11th Cir. 2001); *Reader's Digest Assoc. v. Conservative Digest, Inc.*, 821 F.2d 800, 808 (D.C. Cir. 1987).

> question at hand, we do not find in its brief compass warrant for the severe constraint the dissent would impose. In our judgment, when Congress "limit[ed] attorney fees to 'exceptional case' and [placed] the award of attorney fees ... within the discretion of the court," S. Rep. No. 1400, 93d Cong., 2d Sess. 5 (1974), the legislature did not intend to harness judges to a "hardly ever" rule. Instead of the niggardly reading the dissent proffers (only "overt bad faith," possibly a smidgen less), we think "exceptional," as Congress used the word in Section 35 of the Lanham Act, is most reasonably read to mean what the word is generally understood to indicate—uncommon, not run-of-the-mine.

Noxell Corp. v. Firehouse No. 1 Bar-B-Que Rest., 771 F.2d 521, 526 (D.C. Cir. 1985).

Ultimately, defining "exceptional" as "uncommon" or "not run-of-the-mine"—or, as AIPLA proposes, "the exception to the ordinary patent case"—avoids needlessly limiting judges to the virtually unattainable bar that *Brooks Furniture* sets. Indeed, Justices Ginsberg and Scalia correctly foresaw the risk that an overly strict standard would convert fee shifting to a "hardly ever rule." That has been the fate of the Patent Act. Just as a strict requirement of "overt bad faith" in Section 35 of the Lanham Act was rejected by the *Noxell* court, so too should the strict *Brooks Furniture* test be rejected.

III. A Flexible Test is Consistent with the Practical Realities of Patent Litigation.

Pragmatic considerations also support a flexible exceptional case standard. The need for fee shifting as a case management tool is particularly high in patent cases, where technical complexity and the sometimes staggering expense of pre-trial discovery can drive litigation costs for both sides into the many millions of dollars. Without doubt, the stakes can be very high in patent cases, such as those involving life-saving medicines or other breakthrough technology that has achieved great commercial success, and a correspondingly great expenditure of time and money can be expected.

However, the increasing cost of patent litigation generally, and instances of litigation abuse, have received considerable attention in recent years. While "scorched earth" tactics are sometimes employed in patent litigation between competitor companies, a relatively new phenomenon has emerged where certain patent owners assert specious claims of infringement and engage in tactics that are only intended to drive up the costs of the process. In doing so, these patent owners are able to extract a settlement payment from a defendant, who seeks a way out of the debilitating expenses of prolonged litigation.

A. Patent litigation is a technically complex and expensive procedure that is susceptible to abuse.

AIPLA's recently updated "Report of the Economic Survey," a bi-annual analysis of the economics of intellectual property prosecution and litigation, shows that today the median litigation costs for a patent infringement suit with at least $1 million at risk ranges from $2 million to $5.5 million through trial, depending on the amount at risk. Am. Intellectual Prop. Law Ass'n, *Report of the Economic Survey* 34 (2013) ("AIPLA Economic Survey 2013").[6] In many cases, the litigation costs are a multiple of these figures. *See Highmark, Inc. v. Allcare Health Mgmt. Sys., Inc.*, 701 F.3d 1351, 1355 (Fed. Cir. 2012) ("[E]xceptional case findings frequently involve extraordinarily large awards, often amounting to millions of dollars."); PricewaterhouseCoopers, *2013 Patent Litigation Study* 21 (2013), *available at* http://www.pwc.com/en_US/us/forensic-services/publications/assets/2013-patent-litigation-study.pdf (median time to trial in patent litigation is 2.5 years). Because of its complexity and time to

---

[6] These costs have risen steadily over the past twelve years. In 2001, the median cost of a patent infringement suit involving $1 million to $25 million at risk was about $800,000 through the end of discovery and $1.5 million in total. Am. Intellectual Prop. Law Ass'n, *Report of the Economic Survey* 84 (2001). In 2013, the median cost of such patent infringement suit was $1.4 million through the end of discovery and $2.6 million in total. AIPLA Economic Survey 2013 at 34.

trial, patent litigation is almost inevitably among the most costly of civil litigation cases. *See* Emery G. Lee & Thomas E. Willging, Fed. Judicial Ctr., *Litigation Costs in Civil Cases: Multivariate Analysis* 8 (2010), *available at* www.fjc.gov/public/pdf.nsf/lookup/costciv1.pdf/$file/costciv1.pdf (costs for intellectual property cases almost 62% higher than baseline).

Even when the patentee's infringement claims or the defendant's invalidity or unenforceability defenses are weak, aggressive litigation tactics can prolong litigation for years. Unlike other types of claims, the issues of infringement, validity, or enforceability often cannot be determined to be frivolous without prolonged effort by the parties and the district court. *See Kaehni v. Diffraction Co.*, 342 F. Supp. 523, 536 (D. Md. 1972). Other than the rare defects in personal jurisdiction, justiciability, or standing, it is unusual for a patent infringement claim to be dismissed at the pleading stage. Likewise, the assertion of invalidity defenses requires little in the way of pleading detail.

Faced with weak claims or defenses, a patent litigant still can be forced to engage in extensive discovery into highly factual and technical issues such as the prosecution of the patent, the history and development of the technology, the background of the prior art, the development and operation of the allegedly infringing product, as well as the accused infringer's sales and marketing of the accused product and the patentee's sales and marketing of embodiments of the patented invention. Given the technical complexity, parties

almost invariably engage expert witnesses and undertake far-reaching expert discovery into the underlying technology and any available damages theories. It may take a year—or more—of discovery, briefing, and hearings just to reach a ruling on construction of the claims. While local patent rules may help manage a case by requiring disclosure of infringement and invalidity contentions and streamlining discovery, the intrinsic complexity of patent cases may still require considerable expense to resolve even questionable claims.

Only after months, if not years, of discovery are parties typically given their first real opportunity to resolve the litigation at summary judgment. In practice, summary judgment motions in patent cases require extensive briefing and impose significant burdens on already overburdened district judges to analyze the legal issues and evaluate the presence of triable issues of fact. These circumstances can often result in parties proceeding to trial on weak claims or defenses. Section 285, as currently interpreted, does little to deter abusive or questionable tactics or unreasonably maintaining weak and unduly expensive claims or defenses.

Section 285 was enacted precisely to prevent such conduct, but as currently applied, it provides little disincentive for litigants who engage in abusive or questionable tactics. The larger purpose of the 1946 Act was to reduce the length, and thereby the costs, of patent litigation. *See Recovery in Patent Infringement Suits: Hearing on H.R. 5231 Before the Comm. on Patents*, 79th Cong. 12-14 (1946) (statements of Edwin B. H. Towner, Legislative

Comm. of the Milwaukee Patent Bar Ass'n and Casper W. Ooms, Patent Comm'r); Alan M. Ahart, *Attorneys' Fees: the Patent Experience*, 57 J. Pat. Off. Soc'y 608, 615 (1975). As discussed above, Congress granted district courts the broad power to address instances of unfairness. Using weak claims and defenses to force a party to incur burdensome costs through a prolonged litigation is a prime example of the unfair conduct Section 285 was intended to prevent. The appellate courts should not, through imposition of a narrow and rigid test of exceptionality, take away this broad power conferred upon the district courts to "check" such conduct.

With properly interpreted and calibrated fee shifting under Section 285, parties will have appropriate incentives to "stop and think" about imposing potentially unreasonable, unwarranted, or overly burdensome costs on their adversary. The prospect of fee shifting creates some risk that these negative externalities may be imposed on the party causing them. It incentivizes the parties to exercise care in assessing their contentions, to limit the scope of the case appropriately, and generally to act in a prudent, efficient, and responsible manner consistent with the circumstances of the case. Where a party's decisions and actions make the case an exception to the ordinary patent case, a district judge should have discretion to find injustice were the prevailing party forced to bear the entire burden of its often substantial attorneys' fees.

Section 285 was enacted, in part, to "discourage infringement of a patent by anyone thinking that all he would be required to pay if he loses the suit would

be a royalty." S. Rep. No. 79-1503 (1946), *reprinted in* 1946 U.S. Code Congressional Service 1386, 1387. But just as the statute was meant to deter alleged infringers with weak defenses from thinking that their only damages would be limited to royalties, it also was meant to deter patent holders from pursuing weak claims, thinking that they would have nothing to lose other than the amount of their own attorneys' fees. This reciprocity is demonstrated by the very next sentence of the Senate Report: "The provision is also made general so as to enable the court to prevent a gross injustice to an alleged infringer." *Id.* A flexible standard carries out this intent, and equally binds both sides of the litigation.

Focusing on costs that may have been imposed unreasonably by the non-prevailing party is also in accord with the compensatory goal of Section 285. *See Highmark*, 701 F.3d at 1355 ("[S]ection 285 ... is a primarily compensatory provision.... Early on, it was recognized that attorneys' fee awards were not to be regarded as a penalty ...."). The *Brooks Furniture* test deviates from this purpose by requiring courts to focus on punishing culpable, bad faith intent. The pertinent issue should be whether the losing party unjustly imposed costs on its adversary in excess of those warranted by the strength of its claims or defenses, in light of all of the relevant circumstances.

Recognizing the potential for abusive litigation behavior, Chief Judge Rader of the Federal Circuit has encouraged district courts to make greater use of Section 285 to shift the burden of litigation costs.

See Randall R. Rader, *The State of Patent Litigation*, 21 Fed. Cir. B.J. 331, 344 (2011-2012); Randall R. Rader et al., *Make Patent Trolls Pay in Court*, N.Y. Times, June 4, 2013, at A25. AIPLA agrees that greater flexibility in the awarding of fees will help deter overly aggressive litigation tactics by both plaintiffs and defendants.

Unfortunately, the restrictive two-prong test set by the Federal Circuit in *Brooks Furniture* has impeded the district courts' use of Section 285 to deter patent litigation abuse. Requiring a showing of material litigation misconduct or ***both*** objective baselessness ***and*** subjective bad faith makes it nearly impossible for a prevailing party to recover fees, no matter the circumstances. The data show that, in 2011, fees were shifted under Section 285 in only 20 cases annually out of nearly 3,000 patent cases filed. *Id.*

B. AIPLA's suggested totality-of-the-circumstances test will not undermine the intellectual property bar's ability to advocate with appropriate zeal on behalf of their clients.

The high hurdle set by the *Brooks Furniture* decision has the effect of protecting patent litigants and their attorneys from the risk of fee shifting. AIPLA believes that the intellectual property bar is not in need of such protection, protection that other members of the profession do not enjoy under this Court's precedents. A more flexible test gives the intellectual property bar sufficient room to make

creative, zealous arguments on behalf of their clients.

To be sure, patent law disputes can be complex and nuanced, both substantively and procedurally. But a specialized bar made up of highly trained and experienced outside and in-house counsel exists to advise clients through these challenges. It is the professional responsibility of attorneys in this area, thousands of whom AIPLA counts among its members, to assess and weigh the breadth and strength of patent claims. Intellectual property attorneys perform this task every day when they prosecute patent applications, provide freedom-to-operate opinions, and evaluate patents and patent applications in licensing negotiations.

When a dispute over patent rights arises, the doctrines of patent law, and the procedures available in federal courts, give counsel and their clients many powerful tools to vindicate their rights. But with those tools comes significant responsibility. In complicated and expensive patent cases, the law should provide appropriate incentives for parties to balance their litigation strategies with the substantial external costs they may impose.

In adopting the discretionary language of Section 285, Congress envisioned that fee awards would occur as exceptions to the ordinary case. "Exceptional" means out of the ordinary, not the norm. It does not mean "hardly ever." *Noxell Corp. v. Firehouse No. 1 Bar-B-Que Rest.*, 771 F.2d 521, 526 (D.C. Cir. 1985). This Court is in a position to make Section 285 more available as a tool for district

courts by recalibrating the balance to conform to the plain language of the statute and Congress's intent. It should take the opportunity in this case to do so.

CONCLUSION

For the foregoing reasons, AIPLA respectfully requests that the Court overrule the *Brooks Furniture* test and hold that Section 285 creates a flexible standard for making an "exceptional case" determination, in the exercise of the district court's sound discretion based upon the totality of circumstances.

Respectfully submitted,

WAYNE P. SOBON,
President
AMERICAN INTELLECTUAL
PROPERTY LAW
ASSOCIATION
241 18th Street, South
Suite 700
Arlington, VA 22202
(703) 415-0780

BARBARA A. FIACCO
Counsel of Record
DONALD R. WARE
MARCO J. QUINA
STEPHEN T. BYCHOWSKI
FOLEY HOAG LLP
155 Seaport Boulevard
Boston, MA 02210
(617) 832-1000
bfiacco@foleyhoag.com

December 9, 2013

AMICUS CURIAE BRIEF

RECORD
AND
BRIEFS

Supreme Court, U.S.
FILED
DEC 9 - 2013
OFFICE OF THE CLERK

Nos. 12-1163, 12-1184

IN THE

Supreme Court of the United States

HIGHMARK INC.,

Petitioner,

v.

ALLCARE HEALTH MANAGEMENT SYSTEMS, INC.,

Respondent.

ON WRIT OF CERTIORARI TO
THE UNITED STATES COURT OF APPEALS
FOR THE FEDERAL CIRCUIT

OCTANE FITNESS, LLC,

Petitioner,

v.

ICON HEALTH & FITNESS, INC.,

Respondent.

ON WRIT OF CERTIORARI TO
THE UNITED STATES COURT OF APPEALS
FOR THE FEDERAL CIRCUIT

BRIEF OF APPLE INC. AS *AMICUS CURIAE* IN SUPPORT OF NEITHER PARTY

E. Joshua Rosenkranz
Christopher J. Cariello
ORRICK, HERRINGTON & SUTCLIFFE LLP
51 W. 52nd. St.
New York, NY 10019
(212) 506-5380
jrosenkranz@orrick.com

Mark S. Davies*
Justin P. Bagdady
ORRICK, HERRINGTON & SUTCLIFFE LLP
1152 15th Street
Washington, D.C. 20005
(202) 339-8631
mark.davies@orrick.com
**Counsel of Record*

Counsel for Amicus Curiae

Library of Congress
Law Library

TABLE OF CONTENTS

Page

TABLE OF AUTHORITIES iii

INTEREST OF THE *AMICUS CURIAE* 1

BACKGROUND 3

SUMMARY OF ARGUMENT 7

ARGUMENT 9

I. PATENT ASSERTION ENTITIES ARE THRIVING AT THE EXPENSE OF INNOVATORS 9

A. Patent Assertion Entities Are Thriving 10

B. Most Patent Assertion Entities Are Profiteers That File Strike Suits and Nuisance Suits to Obtain Undeserved Royalties From Innovators 14

II. COURTS SHOULD CONSIDER A BROAD ARRAY OF FACTORS WHEN EVALUATING MOTIONS FOR ATTORNEY'S FEES 21

A. The Test for Fee Shifting Should Take Into Account the Nature and Motivations of the Parties 23

B. The Test for Fee Shifting Should Take Into Account the Merits of the Parties' Positions 29

C. The Test for Fee Shifting Should Take Into Account Litigation Conduct 33

CONCLUSION 36

TABLE OF AUTHORITIES

Page(s)

Cases

Alyeska Pipeline Serv. Co. v. Wilderness Soc'y,
421 U.S. 240 (1975) 23

Atl. Works v. Brady,
107 U.S. 192 (1883) 15

Brooks Furniture Mfg., Inc. v. Dutailier Int'l, Inc.,
393 F.3d 1378 (Fed. Cir. 2005) 3

eBay Inc. v. MercExchange, L.L.C.,
547 U.S. 388 (2006) 6

Eon-Net LP v. Flagstar Bancorp,
653 F.3d 1314 (Fed. Cir. 2011) 28

Fogerty v. Fantasy, Inc.,
510 U.S. 517 (1994) 21, 22

Hartman v. Hallmark Cards, Inc.,
833 F.2d 117 (8th Cir. 1987) 28, 29

Lieb v. Topstone Indus., Inc.,
788 F.2d 151 (3d Cir. 1986) 33

Marx v. Gen. Revenue Corp.,
568 U.S. ----, 133 S. Ct. 1166 (2013) 29

Nightingale Home Healthcare v. Anodyne Therapy,
626 F.3d 958 (7th Cir. 2010) 21, 22, 28, 29

Safir v. U.S. Lines, Inc.,
792 F.2d 19 (2d Cir. 1986) 27

Administrative Decisions

In re Certain Devices for Mobile Data Commc'n,
337-TA-809, Order No. 60
(I.T.C. Oct. 12, 2012) 25

Statutes and Rules

15 U.S.C. § 1117(a) 21, 22

17 U.S.C. § 505 21

35 U.S.C. § 285 ..... *passim*

Leahy-Smith America Invents Act,
Pub. L. No. 112-29, § 34, 125 Stat. 284 (2011) ... 14

Legislative History

S. Rep. No. 79-1503 (1946) 24

Litigation Materials

Nintendo's Motion for Attorneys' Fees, *Guardian Media Techs., Ltd. v. Coby Elecs. Corp.*,
No. 08-cv-8439 (C.D. Cal. June 29, 2009),
ECF No. 218 12

Apple's Redacted Mot. to Dismiss,
Lodsys, LLC v. Combay, Inc.,
No. 11-cv-90 (E.D. Tex. Sep. 18, 2013),
ECF No. 995 27

Brief of *Amici Curiae* Applications Developers Alliance, et al., *Lodsys, LLC v. Combay, Inc.*, No. 11-cv-90 (E.D. Tex. Sep. 19, 2013), ECF No. 999 26

Lodsys, LLC v. Combay, Inc., No. 11-cv-90, 2013 WL 5353004 (E.D. Tex. Sep. 24, 2013) 27

Compl., *Monec Holding AG v. Apple Inc.*, 09-CV-312 (E.D. Va. Mar. 23, 2009), ECF No. 1 31

Def.'s Mot. for Fees, *Monec Holding AG v. Apple Inc.*, (E.D. Va. Aug. 3, 2009), ECF No. 57 31

Hr'g Tr., *Monec Holding AG v. Apple Inc.*, (E.D. Va. Aug. 3, 2009), ECF No. 57-3 31

First Amended Compl., *Openwave Sys. Inc. v. Apple Inc.*, 11-cv-765 (D. Del. Jan. 2, 2013), ECF No. 11 25

Second Amended Compl., *Openwave Sys. Inc. v. Apple Inc.*, 11-cv-765 (D. Del. June 28, 2013), ECF No. 32 .. 25

Potter Voice Techs. v. Apple, Inc., 13-cv-1710 (N.D. Cal. Mar. 29, 2013), ECF No. 319 33

Other Authorities

Acacia Research Historical Market Cap Data, YCharts, http://ycharts.com/companies/ACTG/market_cap (last visited Dec. 9, 2013) 11

American Intellectual Property Law Association, Report of the Economic Survey, 2013 (2013) 13

James Bessen & Michael J. Meurer, *The Direct Costs from NPE Disputes*, 99 Cornell L. Rev. (forthcoming 2014), *available at* http://papers.ssrn.com/sol3/papers.cfm?abstract_id=2091210 ..... *passim*

Emily H. Chen, *Making Abusers Pay: Deterring Patent Litigation by Shifting Attorneys' Fees*, 28 Berkeley Tech. L. J. 351 (2013) 23, 24

Colleen V. Chien, *Of Trolls, Davids, Goliaths, and Kings: Narratives and Evidence in the Litigation of High Tech Patents*, 87 N.C. L. Rev. 1571 (2009) 13, 16, 18

Colleen V. Chien, *Reforming Software Patents*, 50 Hou. L. Rev. 323 (2012) 28

Federal Trade Commission, The Evolving IP Marketplace (2011) 10

P.J. Federico, *Commentary on the New Patent Act*, 75 J. Pat. & Trademark Off. Soc'y 161 (1993) (reprinted from 35 U.S.C.A. §§ 1, *et seq.*, Commentary (West 1954)) 22

Robin C. Feldman, *Intellectual Property Wrongs*, 18 Stan. J.L. Bus. & Fin. 250 (2013) 15

Robin C. Feldman, Rethinking Patent Law (2012) . 17

Chris Foresman, *Every Touch-Based Apple Product Targeted by Apparent Patent Troll,* Ars Technica (Apr. 23, 2012), http://arstechnica.com/apple/2012/04/every-touch-based-apple-product-targeted-by-apparent-patent-troll/ 32, 33

Stefania Fusco, *Markets and Patents Enforcement: A Comparative Investigation of Non-Practicing Entities in the US and Europe*, 19 Michigan Telecomm. & Tech. L. Rev. (forthcoming 2013) 19

Christian Helmers and Luke McDonagh, *Trolls at the High Court?* (London School of Econ., Working Paper 13, 2012), *available at* http://ssrn.com/abstract=2154958 ..... 19, 20

Sara Jeruss, Robin Feldman & Joshua Walker, *The America Invents Act 500: Effects of Patent Monetization Entities on U.S. Litigation*, 11 Duke L. & Tech. Rev. 357 (2012) 11, 13, 19

Mark A. Lemley, *Are Universities Patent Trolls?*, 18(3) Fordham Intell. Prop. Media & Ent. L.J. 611 (2008) 16

Mark A. Lemley, *Ten Things to Do About Patent Holdup of Standards*, 48 B.C. L. Rev. 149 (2007) 18

Jane P. Mallor, *Punitive Attorneys' Fees for Abuses of the Judicial System*, 61 N.C. L. Rev. 613 (1983) 23

Anna Mayergoyz, *Lessons from Europe on How to Tame U.S. Patent Trolls*, 42 Cornell Int'l L.J. 241 (2009) 20

Robert P. Merges, *The Trouble with Trolls: Innovation, Rent-Seeking, and Patent Law Reform*, 24 Berkeley Tech. L.J. 1583 (2009) ... 10, 15, 16, 18

Joe Mullin, *Patent Troll Backs Down, Agrees to Stop Suing Public Transit Agencies*, Ars Technica (Aug. 21, 2013), http://arstechnica.com/tech-policy/2013/08/patent-troll-backs-down-agrees-to-stop-suing-public-transit-agencies 12

PatentFreedom, *Most Pursued Companies*, http://www.patentfreedom.com/about-npes/pursued (last visited Dec. 9, 2013) 18, 19

President's Council of Econ. Advisors, Nat'l Econ. Council, Office of Sci. & Tech. Policy, Patent Assertion and U.S. Innovation (2013), *available at* http://www.whitehouse.gov/sites/default/files/docs/patent_report.pdf 13, 14

PricewaterhouseCoopers, *2012 Patent Litigation Study*, http://www.pwc.com/en_US/us/forensic services/publications/assets/2012-patent-litigation-study.pdf 13

Thomas D. Rowe, Jr., *Predicting the Effects of Attorney Fee Shifting*, 47 Law & Contemp. Probs. 139 (1984) 24

Kenneth W. Starr, *The Shifting Panorama of Attorneys' Fees Awards: The Expansion of Fee Recoveries in Federal Court*, 28 S. Tex. L. Rev. 189 (1986) 23

U.S. Gov't Accountability Office, GAO-13-465, Intellectual Property: Assessing Factors That Affect Patent Infringement Litigation Could Help Improve Patent Quality (2013) 14, 18

INTEREST OF THE *AMICUS CURIAE*[1]

Amicus curiae Apple Inc. ("Apple") is widely considered to be the country's leading innovator in its field. Since 1976, Apple has made its name by designing, developing, and selling cutting-edge consumer electronics, including mobile communication devices, media players, personal computers, and related software and services. Apple products such as the iPhone and the iPad have, in recent years, revolutionized the portable consumer electronics industry. Of course, developing and designing these products has required substantial research, time, and energy. Apple has protected that work with thousands of U.S. patents.

Apple's success sometimes leads it to the courtroom to litigate patent disputes. Apple has seen these disputes from both sides—one day taking on a copycat and the next defending itself against a patent holder alleging infringement. Apple therefore has a strong interest in the U.S. patent system and the balance that it strives to strike between promoting innovation and fostering competition.

Recent phenomena, most importantly the meteoric rise of the patent assertion entity ("PAE"), have disrupted that balance. PAEs do not invent, manufacture, or sell any product. Many of them do noth-

---

[1] The parties have consented to the filing of this brief. No counsel for a party authored this brief in whole or in part, and no such counsel or a party made a monetary contribution intended to fund the preparation or submission of this brief. No person other than *amicus curiae*, its members, or its counsel made a monetary contribution to its preparation or submission.

ing more than acquire vague patents, and then use litigation or the threat of litigation to negotiate royalties that are far larger than what the patents warrant. The patent assertion industry has exploded over the past decade.

Apple is the firm most targeted by PAEs. Over the last three years alone, Apple has faced a PAE's allegations of patent infringement in 92 separate matters. 57 of these cases have been resolved. Apple has rarely lost on the merits. But victory figures as small consolation, because in every one of these cases, Apple has been forced to bear its legal fees. This reality is the lifeblood of the patent assertion industry, because the threat of fees often forces an undeserved settlement. Indeed, the opening line of many negotiations is some form of, "What we're asking for is less than it will cost you to litigate this case to judgment." It should come as no surprise, then, that despite its success in litigating the merits, for business purposes Apple has agreed to a settlement in 51 of the 57 closed cases. The remaining 6 cases are either outright victories or instances in which the plaintiff voluntarily walked away from its suit before judgment.[2] Each of these cases involved a significant investment of fees and effort by Apple.

---

[2] Except where otherwise noted, the Apple-specific statistics contained in this brief are drawn from internal Apple records, and have been verified against data provided by PatentFreedom, a third-party consultancy that focuses on non-practicing entities. *See* PatentFreedom, http://www.patentfreedom.com/about (last visited Dec. 9, 2013). Apple also commissioned PatentFreedom to produce a statistical report on certain global PAE statistics for purposes of this brief. That report is cited herein as *PatentFreedom PAE Study*.

And the litigation statistics are just the tip of the iceberg. For every case that gets to court, Apple receives dozens of royalty demand letters.

These two cases present the Court with an opportunity to help address the growing PAE problem. By statute, district courts may award fees in "exceptional" cases. 35 U.S.C. § 285. But under the current Federal Circuit framework, courts may award fees to a prevailing patent defendant only if "there has been some material inappropriate conduct related to the matter in litigation" or, alternatively, "if both (1) the litigation is brought in subjective bad faith, and (2) the litigation is objectively baseless." *Brooks Furniture Mfg., Inc. v. Dutailier Int'l, Inc.*, 393 F.3d 1378, 1381 (Fed. Cir. 2005). Experience has shown that few district courts award fees under this demanding rubric.

This Court should make clear that district courts have the authority in exceptional cases to award attorney's fees to the defendant. A real threat of fee shifting would take away PAEs' biggest bargaining chip. It would encourage more thorough pre-assertion investigations and discourage weak claims. It would embolden operating companies to challenge frivolous claims in court instead of capitulating *in terrorem*. And it would keep those PAEs that contribute nothing to the patent market from taxing the returns of innovators.

BACKGROUND

Section 285 of the Patent Act provides that "[t]he court in exceptional cases may award reasonable at-

torney fees to the prevailing party." 35 U.S.C. § 285. Both *Highmark Inc. v. Allcare Health Management, Inc.* and *Octane Fitness, LLC v. ICON Health & Fitness, Inc.* present important questions as to how this provision should be applied. But they are creatures of very different contexts, and these contextual distinctions highlight an important new reality in patent litigation.

Highmark is representative of a troubling trend. Allcare Health Management, Inc. ("Allcare") is a so-called "patent assertion entity," or "PAE." Allcare did not invent the "health management system" software disclosed in the vague patent at issue here. It is not interested in making anything with the technology either. It seeks only to use the patent, acquired from the inventor for $75,000, to extract exorbitant royalties. And like most PAEs, Allcare has one move: It threatens litigation.

In April 2002, Allcare wrote Highmark Inc. ("Highmark"), a health services provider, claiming that Highmark was infringing its patent. *Highmark*, Pet. App. 45a. This and subsequent dispatches urged Highmark to purchase a license, and raised the potential for litigation. *Id.* One such letter, in December 2002, not only proclaimed Allcare's intention to seek "substantial damages," but also noted that another entity had already racked up $2 million in legal fees defending itself against Allcare's claims of infringement. *Id.* at 46a.

Allcare made good on its threats, and then some. The parties litigated for five years, and Highmark spent over $4.5 million in legal fees before finally

winning summary judgment. All this even though the suit never should have happened—Allcare's allegations of infringement were meritless from the start. The district court found as much in its memorandum and order granting Highmark's motion for attorney's fees under § 285. "Allcare had not done its homework when it began trolling for dollars and threatening litigation," *id.* at 69a; it had "persisted in its infringement allegations" even after they "were shown to be without support by its own expert report and deposition testimony," *id.* at 78a; and it had engaged in "frivolous and vexatious tactics," *id.* at 82a, "needlessly prolonging th[e] litigation and increasing its costs," *id.* at 90a.

Cases like this—baseless suits initiated and dragged out by PAEs—have become commonplace. As long as those targeted by unscrupulous PAEs have little hope of recovering their legal fees once litigation has ended, PAEs get their way win or lose. It is extortion: This is what it cost the last firm that was too proud to pay up.

Octane, on the other hand, arises from a more traditional context. Both ICON Health & Fitness, Inc. ("ICON") and Octane Fitness, LLC ("Octane") are "operating companies"—they make things and sell them. ICON and Octane are competitors in the market for exercise equipment. ICON is a market leader in this arena, and it owns a portfolio of related patents. It brought suit against Octane to enforce two such patents, alleging that Octane's elliptical machines infringed. *Octane* is not about claiming an undeserved share of another firm's profits; it is about protecting a competitive advantage.

ICON's conduct was different, too, especially when understood in the context of litigation between competitors. There is no indication that ICON, itself an inventor, failed to conduct a proper pre-suit examination, like Allcare failed to do in *Highmark*. And although ICON was not practicing the particular patents at issue in the suit, no judge ever found that it took positions that lacked objective support, let alone clung to them after it became clear that it could not prevail. In both *Highmark* and *Octane*, patent-owners litigated and lost. But the similarities between ICON and Allcare, from motivations to conduct, soup to nuts, may well end there.

In *Highmark* and *Octane*, the Federal Circuit concluded that the case was not "exceptional" within the meaning of § 285, leaving the alleged infringers to bear their own fees. Apple takes no position as to the correctness of these conclusions. But the standard the Federal Circuit applied to reach these determinations is insensitive to an important new reality in patent litigation. "An industry has developed in which firms use patents not as a basis for producing and selling goods but, instead, primarily for obtaining licensing fees." *eBay Inc. v. MercExchange, L.L.C.*, 547 U.S. 388, 396 (2006) (Kennedy, J., concurring). It is, in large part, an industry that subsists on demands *in terrorem*, not technological innovation. These cases present an ideal opportunity to acknowledge this reality and to announce a test that is sensitive to its implications.

SUMMARY OF ARGUMENT

Section 285 of the Patent Act grants federal district courts the discretion to award attorney's fees to the prevailing party in "exceptional" cases. 35 U.S.C. § 285. Much like the fee-shifting provisions applicable to Copyright and Trademark cases, § 285 was meant in part to discourage weak cases and to act as a bulwark against extortionate filings. Never before has this protection been so urgently needed, as the patent world has struggled to cope with the rise of a legion of patent assertion entities that thrives on strike suits, nuisance suits, and *in terrorem* demands. But the Federal Circuit's exceptional case standard has proved nearly impossible to satisfy, squandering § 285's potential benefits. This Court should replace the Federal Circuit's current standard with one that takes account of the business models and motivations of the parties, the merits of the suit, and the parties' conduct during litigation.

I. The growth of the patent assertion industry over the past decade has been startling. Most patent litigation is now initiated by PAEs. And for every suit that is actually filed, PAEs make many more demands. Operating companies spend vast sums investigating PAEs' allegations of infringement, negotiating settlements, and litigating claims. PAEs do not invent, develop, or make anything, but their impact on the tech industry is profound.

On the whole, the PAE story has not been a happy episode for patent law. This is not to say that all PAEs are bad. Some PAEs may help spur innovation by identifying and buying underutilized inven-

tions, and licensing their use to those who can best maximize their value. Others might hold highly valuable patents licensed to major operating companies, and protect those companies' competitive advantage by enforcing the patents against infringers. But most PAEs instead practice the dark arts of *in terrorem* profiteering, threatening nuisance suits or strike suits to obtain royalties. These PAEs use the expense of patent litigation as a bargaining chip to obtain royalties that are grossly disproportionate to the actual value of the rights they transfer.

This behavior is harming innovation. Needless to say, money spent on undeserved royalties or unnecessary litigation would be far better spent on innovation. By and large, PAEs are simply skimming the profits of innovative companies without themselves contributing anything to technological innovation.

II. This Court should adopt an exceptional case standard that focuses on the nature and motivations of the parties to the litigation, the merits of the parties' positions, and the parties' conduct during litigation.

The traditional rule in American litigation is that each party bears its own litigation costs. But Congress has altered this rule in several contexts in order to serve substantive goals or eliminate perverse incentives. Section 285 is a child of this tradition. Congress recognized that the immense cost of patent litigation could be used as a bargaining chip to extract exorbitant and unjustified settlements. It enacted § 285 in part as a corrective to this potential

concern. Section 285 must be understood in light of these goals: discouraging weak claims and ensuring that the expense of patent litigation is not used as a bargaining chip to extort settlements.

To this end, § 285 should account for a host of factors relevant to a particular litigation. These include the nature of the parties, the motivations underlying the parties' positions, the objective merit of both the parties' claims and the particular arguments advanced in court, and the parties' conduct. Such a test will discourage nuisance suits and strike suits. It will prevent patent-holders from using the cost of patent litigation as a bargaining chip to obtain more than their fair share. And it will ensure that patent litigation is used to further the patent law's goal of encouraging progress in the useful arts.

ARGUMENT

I. PATENT ASSERTION ENTITIES ARE THRIVING AT THE EXPENSE OF INNOVATORS

The patent assertion industry is booming. Patent assertion is not necessarily a bad thing, at least not in the abstract. Entities that specialize in identifying valuable inventions, and licensing or protecting patents in them, can in theory be a boon to innovation. But the reality of the boom is not so rosy. The risk and expense of patent litigation creates opportunities for extortionate behavior, and many PAEs have leapt at the chance to take more than their fair share. Worse still, the targets of these *in terrorem* tactics are often the most successful innovators in

American industry. PAEs have become a drag on technological innovation, inflicting billions of dollars in deadweight losses every year.

A. Patent Assertion Entities Are Thriving

PAEs are a type of "non-practicing entity," or "NPE." There are now more than 250 PAEs like Allcare actively acquiring patents, penning demand letters, and filing lawsuits in federal court. *PatentFreedom PAE Study*. What separates PAEs from other types of NPEs—like research and development shops, individual inventors, or universities—is that PAEs generally assert only patents acquired from others, not patents that were originally assigned to them. *See* Federal Trade Commission, The Evolving IP Marketplace, at 8 & n.5 (2011). In other words, they neither invent nor produce. They exist only to generate royalties.

Entities that acquire patent rights for the sole purpose of obtaining royalties are nothing new. *See* Robert P. Merges, *The Trouble with Trolls: Innovation, Rent-Seeking, and Patent Law Reform*, 24 Berkeley Tech. L.J. 1583, 1592-96 (2009). But over the past decade, the patent assertion business has exploded. *See* James Bessen & Michael J. Meurer, *The Direct Costs from NPE Disputes*, 99 Cornell L. Rev. (forthcoming 2014) (manuscript at 5, 29), *available at* http://papers.ssrn.com/sol3/papers.cfm?abstract_id=2091210.

So far in 2013, PAEs alleged patent infringement against a staggering 2,873 defendants. *PatentFreedom PAE Study*. If the filings keep apace,

the industry will break 2011's record mark of 3,103. *Id.* PAE litigation is also rapidly becoming the dominant feature of the patent landscape. In 2008, 17 percent of all defendants accused of patent infringement were accused by PAEs. *Id.* By 2010, the number was 33 percent, and it grew to 37 percent in 2012. *Id.* It is up once again this year: 43 percent of all defendants face PAEs. *Id.* To be sure, we are in the midst of a well-documented boom in patent litigation. But the above statistics suggest that the explosion of PAE suits is not merely a function of the boom. PAEs *are* the boom.

Little wonder, then, that the biggest players in the PAE game are now the most prolific filers in all of patent litigation. In a study of 500 patent suits filed between 2007 and 2011, four of the five most frequent filers were PAEs. (The exception is a pharmaceutical company.) Sara Jeruss, Robin Feldman & Joshua Walker, *The America Invents Act 500: Effects of Patent Monetization Entities on U.S. Litigation*, 11 Duke L. & Tech. Rev. 357, 382 (2012). Some of the big names:

- Acacia Research Corporation, a publicly-traded company that asserts its hundreds of patent portfolios through an army of subsidiaries. Acacia's market capitalization grew from just $62 million in November 2008 to **$2.12 billion** in March of 2012, but it is prone to the sorts of wild fluctuations one would expect of a firm whose fortunes turn exclusively on threats and strike litigation. Acacia Research Historical Market Cap Data, YCharts,

http://ycharts.com/companies/ACTG/market_cap (last visited Dec. 9, 2013).

- ArrivalStar S.A., a Luxembourg-based PAE that regularly alleges infringement of its vehicle tracking patents, but devoutly avoids litigating the merits. Joe Mullin, *Patent Troll Backs Down, Agrees to Stop Suing Public Transit Agencies*, Ars Technica (Aug. 21, 2013), http://arstechnica.com/tech-policy/2013/08/patent-troll-backs-down-agrees-to-stop-suing-public-transit-agencies. ArrivalStar made news this year by targeting municipal public transportation agencies, ultimately relenting when the American Public Transit Association sued to invalidate ArrivalStar's patents. *Id.*

- Guardian Media Technologies, Ltd., a PAE founded by a former patent lawyer. Nintendo's Motion for Attorneys' Fees, at 1-2, *Guardian Media Techs., Ltd. v. Coby Elecs. Corp.*, No. 08-cv-8439 (C.D. Cal. June 29, 2009), ECF No. 218. Guardian is fond of asserting its two parental control patents against dozens of defendants at a time, but it too has become expert at avoiding the merits. *Id.*

These three alone have sued hundreds of defendants over the last decade.

In point of fact, the run of PAE litigation is two things: short on merit and expensive to defend against. In cases resolved on the merits in the last decade, PAEs obtained favorable results in just one out of every five. *PatentFreedom PAE Study*; *see al-*

so PricewaterhouseCoopers, *2012 Patent Litigation Study*, at 12, http://www.pwc.com/en_US/us/forensic-services/publications/assets/2012-patent-litigation-study.pdf (finding that NPEs obtained favorable results in 24% of cases between 2006-2011, a success rate 13% lower than that of operating companies during the same period). But the cases' relative lack of merit hardly makes them less costly to litigate. "Mean legal costs per defense range from $420,000 for small/medium companies to $1.52 million for large companies." Bessen & Meurer, *supra*, at 14. And the more that is at stake, the higher the costs. Major innovators like Apple often face suits in which more than $10 million is at risk—legal bills for these sorts of suits routinely run $3 to $4 million or more. *See* American Intellectual Property Law Association, Report of the Economic Survey, 2013, at 35 (2013).

As startling as the above data are, just tallying up the litigation stats understates PAEs' impact. Litigation is usually a last resort. The leading edge of a patent assertion is most often a simple demand letter. *See id.*; Jeruss, Feldman & Walker, *supra*, at 374-75. "For every defendant that is actually sued, many more demands are made." Cólleen V. Chien, *Of Trolls, Davids, Goliaths, and Kings: Narratives and Evidence in the Litigation of High Tech Patents*, 87 N.C. L. Rev. 1571, 1579 (2009) [hereinafter Chien, *Litigation of High Tech Patents*]. "Conservative estimates place the number of threats in the last year alone at a minimum of 60,000 and more likely at over 100,000." President's Council of Econ. Advisors, Nat'l Econ. Council, Office of Sci. & Tech. Policy, Patent Assertion and U.S. Innovation 6 (2013), *available at* http://www.whitehouse.gov/sites/default/

files/docs/patent_report.pdf [hereinafter Patent Assertion and U.S. Innovation]. Simply reviewing and responding to these demands can be a costly ledger item, even if a suit is never filed.

Both Congress and the President have taken note of this new reality. *See* Leahy-Smith America Invents Act, Pub. L. No. 112-29, § 34, 125 Stat. 284, 340 (2011) (directing U.S. Government Accountability Office to "conduct a study of the consequences of litigation by non-practicing entities, or by patent assertion entities"); U.S. Gov't Accountability Office, GAO-13-465, Intellectual Property: Assessing Factors That Affect Patent Infringement Litigation Could Help Improve Patent Quality (2013) [hereinafter GAO Report]; Patent Assertion and U.S. Innovation, *supra*. The phenomenon has received heavy scholarly attention as well. Something huge is happening. The rise of the PAE presents new and fundamental challenges for the patent world.

B. Most Patent Assertion Entities Are Profiteers That File Strike Suits and Nuisance Suits to Obtain Undeserved Royalties From Innovators

Because PAEs do not use their patents to make and sell things, the only way they can profit is by turning them into streams of income. Judging by their astounding growth over the past decade, they are succeeding. But profits do not necessarily mean social value. And the evidence suggests that PAEs are growing for all the wrong reasons.

Patent law seeks to maximize the social good by incentivizing technological innovation. *Atl. Works v. Brady*, 107 U.S. 192, 200 (1883) ("The design of the patent laws is to reward those who make some substantial discovery or invention, which adds to our knowledge and makes a step in advance in the useful arts."). There is nothing inherent in the concept of a PAE that undermines this goal. Indeed, some PAEs help. Some PAEs engage in a "form of arbitrage," working to identify or develop valuable patents, purchasing them from inventors without the resources or expertise to deploy them, and licensing them at a fair price to firms that can bring them to market. Merges, *supra*, at 1588. Other PAEs hold valuable patents licensed to major operating companies, asserting those patents against infringers in order to protect licensees' investment. These PAEs facilitate competition in bringing innovative technology to market. No problem as far as the goals of patent law are concerned.

But most PAEs hoe a different row. Certain aspects of the patent system create opportunities for patent-holders "to bargain for compensation far beyond the value of the right." Robin C. Feldman, *Intellectual Property Wrongs*, 18 Stan. J.L. Bus. & Fin. 250, 253 (2013). No bargaining chip is more valuable than the "lack of a quick and reasonably priced method for resolving disputes regarding the boundaries of the rights," *id.* at 258—in other words, the enormous cost of patent litigation. And altogether too many PAEs are in the business of leveraging this feature of patent litigation "to capture not just the value of what they contributed to an invention, but also a disproportionate share of somebody else's

product." Mark A. Lemley, *Are Universities Patent Trolls?*, 18(3) Fordham Intell. Prop. Media & Ent. L.J. 611, 613-14 (2008). Economists call this rent seeking. Securities lawyers call it strike litigation. The most appropriate label might be extortion.

Allcare illustrates how PAEs have reduced this profiteering to a science. To begin with, their very defining feature—that they do not practice their patents—is an adaptation meant to tilt the bargaining table. For operating companies, the risk of a countersuit factors heavily into the decision whether to file suit against a competitor. But an entity that never makes anything can never be counter-sued. Bessen & Meurer, *supra*, at 29. This means PAEs have less at stake during litigation than the operating companies they target, and far lower discovery costs. *Id.* Their greater tolerance for drawn-out litigation makes PAEs' *in terrorem* demands all the more credible.

PAEs then amplify this advantage through two primary strategies. Some are volume scorers. These PAEs live in the "gap between what is truly innovative and what is permissibly patented and asserted." Merges, *supra*, at 1589. They buy up weak or vague patents and assert them against dozens of operating companies. *See* Bessen & Meurer, *supra*, at 8, 20. Because the patents are of low quality, the PAEs are often "willing to settle for small payments, often no more than the amount a defendant would spend on legal fees to defend the case." *Id.* But "[i]f a fraction of these attempts succeed, a revenue stream can be developed without resort to litigation." Chien, *Litigation of High Tech Patents*, *supra*, at 1580.

And avoid litigation they do, assiduously. Often they perform what one scholar has dubbed "The Dance of the Sugar Plum Letter," a method of "enter[ing] license negotiations without putting the patent at risk." Robin Feldman, Rethinking Patent Law 56-57 (2012). The idea is to craft a demand letter just gentle enough to avoid giving rise to a litigable controversy and hence a declaratory judgment suit in a potentially unfriendly forum. *Id.* As long as the PAE can avoid litigating the patent, it can assert it over and over again for the cost of a demand letter's postage stamp. Or perhaps the next filing fee—some PAEs, as Apple can attest, have been known to voluntarily dismiss suits after adverse rulings, only to pursue identical claims in another forum.

Indeed, Apple deals with these sorts of entities constantly. At present, 228 patent assertions against Apple remain unresolved. Some of the demand letters Apple receives specify the allegedly infringed patent, and some do not. Some of them articulate a claim construction under which an Apple product might infringe, but most do not. All of them, no matter how vague or fanciful they are otherwise, invoke loud and clear the patent owner's right to exclude others from use of the technology disclosed in the patent. And none ever fails to invite Apple to purchase a license. Two attorneys at Apple spend all of their time researching these letters' claims and drafting responses. Some inevitably result in licensing agreements, even though the technology in many of the patents may be of no real use to Apple.

The other model popular among PAEs is to stalk "big game." Bessen & Meurer, *supra*, at 20. PAEs "have a reputation for surprising their targets, typically mature companies that have already developed and sold allegedly infringing products." Chien, *Litigation of High Tech Patents*, *supra*, at 1579. The idea is to ambush the company after it has sunk costs into a technology. *See* Merges, *supra*, at 1590-91. "Even if [the company] could quite easily have avoided infringing the patent if [it] had been aware of it before making the decision to choose this technology," its sunk costs "drive the licensing settlement value to a percentage that is much greater than it would be in a system in which we calculated the value that the inventor had actually contributed to the product." Mark A. Lemley, *Ten Things to Do About Patent Holdup of Standards*, 48 B.C. L. Rev. 149, 154 (2007).

The big-game PAE's favorite target has two things in common: innovative, high-tech products and large profits. "[A] typical smartphone," say, "uses from 50,000 to 250,000 patented technologies." GAO Report, *supra*, at 31. This makes searching for potentially relevant patents before development extremely difficult, and it makes the threat of litigation even more daunting because just a handful of assertions can imperil the entire product. Put simply, the most successful firms have the most to give and the most to lose, so a PAE's bargaining power is at its apex. The list of non-practicing entities' most popular targets reads like a who's-who of the giants of the tech industry. PatentFreedom, *Most Pursued Companies*, http://www.patentfreedom.com/about-

npes/pursued (last visited Dec. 9, 2013). And again, Apple is at the top of the hit list. *Id.*

Whatever the model or the size of the target, though, the ultimatum is the same: pay royalties or pay legal fees. "Given the costs of litigating infringement suits, the uncertainty of the outcome, and the potential for outsized judgment awards, companies frequently capitulate to a [PAE]'s demands, rather than face the ordeal of trial." Jeruss, Feldman & Walker, *supra*, at 375. When PAEs are forced to litigate, they tend to lose, but not before imposing a price tag for legal fees that will play perfectly in the next demand letter, or gaining enough information during discovery to form the basis for the next extortionate suit. This heads-I-win-tails-you-lose scenario is why PAEs have been so successful.

This is hardly idle speculation—the relative modesty of PAE activity internationally bears it out. Apple has considerable experience litigating in European countries, for example, but it faces almost no PAE litigation outside of the United States. Recent empirical research has confirmed that PAEs are a comparatively insignificant feature of the patent landscape in the United Kingdom, Germany, and Italy. *See* Christian Helmers and Luke McDonagh, *Trolls at the High Court?* (London School of Econ., Working Paper 13, 2012), *available at* http://ssrn.com/abstract=2154958; Stefania Fusco, *Markets and Patents Enforcement: A Comparative Investigation of Non-Practicing Entities in the US and Europe*, 19 Michigan Telecomm. & Tech. L. Rev. (forthcoming 2013). What do all these European

countries have in common? They each follow the "loser pays" rule—sometimes called the "British rule"—for attorney's fees. Anna Mayergoyz, *Lessons from Europe on How to Tame U.S. Patent Trolls*, 42 Cornell Int'l L.J. 241, 265-67 (2009). As many have recognized, it is not a coincidence that a system in which a PAE cannot make a credible threat of huge litigation costs is a system in which a PAE cannot succeed. *See id.*; Helmers & McDonagh, *supra*, at 19.

But back here in the United States, Apple and other innovative companies are incurring enormous costs defending against baseless claims brought by entities that exist to use litigation as a bargaining chip. *See* Bessen & Meurer, *supra*, at 3 (estimating that non-practicing entities imposed costs of $29 billion in 2011). Apple has no choice but to pay its bill if it wants to continue to innovate. As Apple's CEO put it, "It's overhead." Apple can no easier avoid the costs of PAE litigation than it can avoid the costs of keeping the lights on in its Cupertino, California headquarters.

The bottom line is that while *some* PAEs might serve useful functions in the patent market, most plainly do not. Most are interested only in abusing the patent system to collect more than their share. And litigation fees are the linchpin. PAEs have proliferated over the past decade because they have succeeded time and time again in imposing massive litigation fees on their targets, boosting each time the credibility of their threats. The federal courts' demonstrated reluctance to shift these fees onto PAEs has emboldened them to bring ever more liti-

gation. This dynamic is undermining the goals of patent law and inflicting serious harm on the economy.

II. COURTS SHOULD CONSIDER A BROAD ARRAY OF FACTORS WHEN EVALUATING MOTIONS FOR ATTORNEY'S FEES

In *Fogerty v. Fantasy, Inc.*, 510 U.S. 517 (1994), this Court considered the fee-shifting provision that applies in copyright cases, 17 U.S.C. § 505. Under § 505, "the court may ... award a reasonable attorney's fee to the prevailing party." When applying this provision, the Court explained, "[p]revailing plaintiffs and prevailing defendants are to be treated alike." *Fogerty*, 510 U.S. at 534. The Court then endorsed a set of factors for use by lower courts in evaluating whether attorney's fees should ultimately be awarded in a given case. Those factors include "frivolousness, motivation, objective unreasonableness (both in the factual and in the legal components of the case) and the need in particular circumstances to advance considerations of compensation and deterrence." *Id.* at 534 n.19.

In *Nightingale Home Healthcare v. Anodyne Therapy*, 626 F.3d 958 (7th Cir. 2010), Judge Richard Posner explored the Lanham Act's fee-shifting provision, 15 U.S.C. § 1117(a). Section 1117(a) provides that "the court in exceptional cases may award reasonable attorney fees to the prevailing party." Driving Judge Posner's analysis of this "exceptional case" standard was potential "use [of] the Lanham Act for strategic purposes"—in other words, to effectuate goals "independent of the outcome of the case

by piling litigation costs on a competitor." *Nightingale Home Healthcare*, 626 F.3d at 962. To meet this concern, he concluded, § 1117(a) mandates fee shifting where a prevailing party "can show that his opponent's claim or defense ... was extortionate in character." *Id.* at 965.

Section 285 is animated by many of the same principles recognized in *Fogerty* and *Nightingale*. As this Court explained in *Fogerty*, the fee shifting statutes in the patent, trademark, and copyright law are "closely related." *Id.* at 525 n.12. Indeed, the text of § 285 is virtually identical to that of its Lanham Act counterpart. And although its counterpart in the copyright context does not include the "exceptional case" language, § 285's drafting history indicates that § 285 was initially identical to the copyright provision, and the "exceptional case" language was adopted only "to express the intention of the old statute as shown by its legislative history and as interpreted by the courts." P.J. Federico, *Commentary on the New Patent Act*, 75 J. Pat. & Trademark Off. Soc'y 161, 216 (1993) (reprinted from 35 U.S.C.A. §§ 1, *et seq.*, Commentary (West 1954)). All three provisions serve the same objectives, and are meant to do so in the same manner.

Section 285 should, just like the *Fogerty* factors, account for the nature of the litigants in a particular case, their motivations, the merits of their positions, and their conduct during litigation. Courts should view these factors as interrelated, and apply them with an eye towards discouraging extortionate litigation. And the same inquiry should be applied to

plaintiffs and defendants alike. This test will best serve the goals of patent law.

A. The Test for Fee Shifting Should Take Into Account the Nature and Motivations of the Parties

Under the so-called "American rule," "the prevailing litigant is ordinarily not entitled to collect a reasonable attorneys' fee from the loser." *Alyeska Pipeline Serv. Co. v. Wilderness Soc'y*, 421 U.S. 240, 245-47 (1975). While this arrangement is the accepted norm in much of American litigation, Congress has enacted hundreds of statutes that create fee shifting regimes that deviate from the rule. Kenneth W. Starr, *The Shifting Panorama of Attorneys' Fees Awards: The Expansion of Fee Recoveries in Federal Court*, 28 S. Tex. L. Rev. 189, 195 (1986).

Many of these statutory exceptions are designed to combat the possibility that a rule requiring each party to bear his, her, or its fees "may function as a 'legalized form of blackmail' that encourages frivolous claims and adds to the congestion of courts." Jane P. Mallor, *Punitive Attorneys' Fees for Abuses of the Judicial System*, 61 N.C. L. Rev. 613, 617 (1983). The worry is that the American rule could create a dynamic where "a defendant might choose not to challenge a disputed claim, or even a groundless claim, if the costs of defending the claim would exceed the plaintiff's demands." *Id.* Under these conditions, "even if a plaintiff is unwilling to go to trial, it is still profitable for the plaintiff to file a pure nuisance claim whenever the plaintiff's cost of filing is less than the defendant's cost of defense." Emily H.

Chen, *Making Abusers Pay: Deterring Patent Litigation by Shifting Attorneys' Fees*, 28 Berkeley Tech. L. J. 351, 359 (2013). If this sounds familiar, it is probably because this is very calculus that motivates many PAEs, described earlier.

Of course, it follows from the above that the effect of a fee system that includes a "substantial likelihood of fee shifting against losing plaintiffs ... should be to discourage pursuit of weak claims" brought for improper purposes. Thomas D. Rowe, Jr., *Predicting the Effects of Attorney Fee Shifting*, 47 Law & Contemp. Probs. 139, 152 (1984). This is one of the things § 285 was enacted to do. *See* S. Rep. No. 79-1503, at 2 (1946) (explaining that § 285 "enable[s] the court to prevent a gross injustice to the infringer"). It must take account of motivations like those driving PAEs in order to have its intended effect.

A party's motivations in litigation may not be readily apparent in every case, but in some it is all too obvious. In *Highmark*, for instance, Allcare used the explicit threat of exorbitant litigation costs from the get-go to gain the upper hand. It had conducted no pre-suit investigation, so its litigation cannot possibly have been motivated by the bona fide desire to protect its patent rights. And even after its position was exposed as wholly untenable, Allcare persisted, a decision that can be explained only as an attempt to run up its opponent's costs. *Highmark* has all the markings of a case in which one party litigated purely for what Judge Posner called "strategic purposes."

Another prime example is Apple's litigation against a PAE called Openwave Systems Inc. In the fall of 2011, Openwave filed complaints against Apple and Research in Motion Corp. (maker of the Blackberry line of mobile devices) before both the United States International Trade Commission and a federal district court in the District of Delaware. *See In re Certain Devices for Mobile Data Commc'n*, 337-TA-809 (I.T.C.); *Openwave Sys. Inc. v. Apple Inc.*, 11-cv-765 (D. Del.). Both suits alleged infringement of the same five Openwave-owned patents. The district court action was stayed while the ITC action proceeded through discovery, a *Markman* hearing, and an Administrative Law Judge's claim construction. Claim construction did not go well for Openwave. With the writing on the wall, it withdrew its complaint and moved for termination of the ITC investigation in October 2012—just five days before trial—and the ITC granted the motion. *See In re Certain Devices for Mobile Data Commc'n*, 337-TA-809, Order No. 60 (I.T.C. Oct. 12, 2012).

But then Openwave (which by this time had changed its name to Unwired Planet) took a mulligan. It headed back to federal court in Delaware, filing an amended complaint that narrowed its focus to three of the initial five patents. First Amended Compl., *Openwave Sys. Inc. v. Apple Inc.*, 11-cv-765 (D. Del. Jan. 2, 2013), ECF No. 11. Apple moved to dismiss the complaint, but the district court permitted Unwired Planet to amend again, and the case barreled on. Second Amended Compl., *Openwave Sys. Inc. v. Apple Inc.*, 11-cv-765 (D. Del. June 28, 2013), ECF No. 32. Between the ITC and the district court, Apple has had to respond to *five* claim con-

struction briefs. A second *Markman* hearing was held on November 25, 2013. Exceptional indeed.

A party's business model, understood through its litigation history, can also offer clues as to the party's motivations. Consider, for example, PAEs like Guardian Media Technologies or ArrivalStar, discussed above. A search through a patent database will reveal quite an affinity for filing suit in federal court, but a mysterious timidity when it comes to litigating the merits. This is not a coincidence. It is the key tactic in a business model that uses the courts over and over again not to vindicate rights, but to extort undeserved settlements.

One would be hard pressed to imagine a more troubling instantiation of this model than the one practiced by Lodsys Group, LLC ("Lodsys"). As the market for mobile devices like the iPhone and iPad has matured, a community of millions of software developers has grown up along with it. Brief of *Amici Curiae* Applications Developers Alliance, et al. at 2, *Lodsys, LLC v. Combay, Inc.*, No. 11-cv-90 (E.D. Tex. Sep. 19, 103), ECF No. 999. This community designs and builds "apps"—short for applications—based in mobile operating systems like Apple's iOS. *Id.* Lodsys burst onto the patent assertion scene in 2011 by firing off a spate of demand letters to app developers, many of whom are individuals with extremely little revenue, alleging that they were using software related to "in-app purchasing" that was covered by a handful of Lodsys-owned patents. *Id.* at 2-3.

Lodsys did not send demands to Apple, and even acknowledged that Apple has a license to the patents. But Apple, interested for obvious reasons in the health of the app development community, stepped in anyway. Apple's Redacted Mot. to Dismiss at 3, *Lodsys, LLC v. Combay, Inc.*, No. 11-cv-90 (E.D. Tex. Sep. 18, 2013), ECF No. 995. First, it explained to Lodsys in plain terms the flaw in its demands: Apple had obtained a license from the prior owner to use each of Lodsys's patents, and that license covered app developers too. *Id.* Nevertheless, Lodsys brought suit against dozens of developers, many too small to have the resources to litigate. So Apple moved to intervene, seeking to place itself and its license between Lodsys and the developers. But again, Lodsys scuttled away, settling with each of the developers for a pittance, thereby mooting Apple's attempted intervention and avoiding a sure loss on the merits. *See id.* at 4; *Lodsys, LLC v. Combay, Inc.*, No. 11-cv-90, 2013 WL 5353004 (E.D. Tex. Sep. 24, 2013). Lodsys has no compunctions about this strategy. It will keep moving from developer to developer, leeching whatever royalties it can until a party with the resources to litigate scares it away.

If ever an entity with this sort of track record is forced into litigating the merits, a district court should take account of this in deciding whether to award fees. Considering this sort of background is hardly a novel idea. Courts routinely consider "the litigant's history of litigation and in particular whether it entailed vexatious, harassing or duplicative lawsuits" when evaluating whether a particular lawsuit should result in sanctions. *Safir v. U.S. Lines, Inc.*, 792 F.2d 19, 24 (2d Cir. 1986). This

simply reflects the reality that the nature of a party, as revealed through its litigation history and business model, can provide a window into that party's motivations in a particular suit. *Cf. Eon-Net LP v. Flagstar Bancorp*, 653 F.3d 1314, 1326 (Fed. Cir. 2011) (noting "indicia of extortion" and "history of filing nearly identical patent infringement complaints" in affirming exceptional case finding).

Although the nature and motivations of the parties to the litigation should be at the forefront of the analysis, "bad faith" should not be a requirement. The "bad faith" hurdle is perhaps the most formidable obstacle to fee recovery. *See* Colleen V. Chien, *Reforming Software Patents*, 50 Hou. L. Rev. 323, 378 (2012) ("[W]hen costs are imposed in only the case of bad faith, rather than automatically, courts [are] more loath to make the requisite finding and rarely order[] the payment of fees."). As Judge Posner explained in *Nightingale*:

> [A]n elaborate inquiry into the state of mind of the party from whom reimbursement of attorneys' fees is sought should be avoided. It should be enough to justify the award if the party seeking it can show that his opponent's claim or defense was objectively unreasonable—was a claim or defense that a rational litigant would pursue only because it would impose disproportionate costs on his opponent—in other words only because it was *extortionate in character if not necessarily in provable intention*. That should be enough to make a case "exceptional."

Nightingale Home Healthcare, 626 F.3d at 965 (emphasis added); *accord Hartman v. Hallmark Cards, Inc.*, 833 F.2d 117, 123 (8th Cir. 1987) ("[A]bsence of bad faith is not alone determinative on the Lanham Act fee issue."). Where it exists, evidence of subjective bad faith should of course not be excluded from the analysis—no need for a court to ignore plain evidence of misconduct—but the test for fees under this statutory regime should not hinge upon a prevailing party's ability to prove intent, particularly where federal courts are already vested with the authority to award fees in cases of bad faith. *Cf. Marx v. Gen. Revenue Corp.*, 568 U.S. ----, 133 S. Ct. 1166, 1175 (2013) ("[F]ederal courts have inherent power to award attorney's fees in a narrow set of circumstances, including when a party brings an action in bad faith.").

B. The Test for Fee Shifting Should Take Into Account the Merits of the Parties' Positions

The test for fee shifting under § 285 should also, of course, take into account the merits of the parties' positions and claims. Courts evaluating the merits in applying § 285 should consider the overall likelihood of success of the lawsuit, the objective basis underlying individual claims, and the reasonableness of the actual positions taken during litigation.

Again, *Highmark* is a case in point. One of Allcare's allegations of infringement concerned claim 102 of its health care management system patent. The preamble of claim 102 explained that the claim was directed to "[a] method of managing an integrat-

ed health care management system." *Highmark*, Pet. App. 14a. Elements of the claim then referred back to the "integrated health care management system" language. *Id.* Accordingly, as Allcare initially conceded, and as the Federal Circuit would ultimately find, the preamble language, under well-settled law, was itself a claim limitation. *See id.*

And under this limitation, any reasonable party would have known that Allcare's claim was dead on arrival. Allcare itself had proposed a construction of "integrated health care management system" that required the participation of not only health care providers and insurers, but also of patients and employers. *Id.* at 15a-16a. Highmark's allegedly infringing system obviously did not involve patient and employer interaction. So Highmark's system could not be infringing, plain as day. But Allcare nevertheless persisted in arguing against settled law that the preamble language did not limit claim 102, and against its own expert's conclusion that the preamble language required patient and employer interaction with the system. As both the district court and Federal Circuit found, Allcare's allegations with respect to claim 102 were utterly and objectively baseless.

Cases like this are hardly rare, as Apple can attest. Take *Monec Holding v. Apple Inc.* Monec is a Swiss holding company. It sued Apple in 2009 in the Eastern District of Virginia without even the courtesy of a demand letter. The complaint alleged that the Apple iPhone infringed a patent it owned related to e-book technology. Monec's counsel made clear

early on that it would like to resolve the suit quickly by selling its patent to Apple or licensing its use.

One of the allegations in Monec's complaint stated that "[t]he Apple iPhone display has dimensions such that one page of a book can be displayed at a normal size." Compl. ¶ 23, *Monec Holding AG v. Apple Inc.*, 09-CV-312 (E.D. Va. Mar. 23, 2009), ECF No. 1. Apple's counsel found this allegation puzzling in light of the complaint's concession that the iPhone's display in fact measures 3.5 inches diagonally. *Id.* ¶ 11. Counsel wrote to Monec, requesting an explanation. Monec's reply did nothing to clarify. It did not disclose the nature of any pre-suit investigation. Nor did it articulate a claim construction under which its position might be arguable. It simply reiterated its laughable contention that an iPhone can display one page of a book at normal size, and, of course, expressed Monec's willingness to enter a license agreement. Def.'s Mot. for Fees 2-3 & exh. H, *Monec Holding AG v. Apple Inc.* (E.D. Va. Aug. 3, 2009), ECF No. 57.

Apple's counsel moved for summary judgment, and the district court granted the motion. The district court remarked that "no person of ordinary understanding of the English language would ever say this would be normal size." Hr'g Tr. 7, *Monec Holding AG v. Apple Inc.* (E.D. Va. Aug. 3, 2009), ECF No. 57-3. Apple then moved for fees under § 285, contending that Monec had failed to conduct a pre-suit investigation, had taken an objectively baseless position, and had persisted in its claims after it became obvious that they lacked merit. The district court denied the motion from the bench.

All cases are not, of course, so painlessly dispatched. Consider *Guardian Media Technologies, Ltd. v. Coby Electronics Corp.* Guardian, as noted above, is one of the most prolific filers in patent litigation. It filed this suit against *thirty-six* defendants, including Apple, in December 2008. Guardian alleged that each infringed its patented parental video control technology. Most defendants, Apple included, settled out of court. Guardian had demonstrated its litigiousness over the years. As tough a pill as a settlement can be to swallow, it tends to be more palatable than years of litigation.

But one defendant, Nintendo of America, Inc. ("Nintendo"), decided to litigate. Nintendo explained to Guardian that the Wii video game console, the allegedly infringing product, did not even *play* video. How could it infringe a technology related to video playback? Guardian pressed ahead anyway, apparently on the strength of its contention that a video *game* is also a video program. It lost, of course. But not before Nintendo's counsel spent 622 hours defending against Guardian's baseless claims, running a bill of $309,442.50. The district denied Nintendo's motion for fees.

Monec and *Guardian* go down in the books as just a couple more PAE cases, meritless strike suits seeking undeserved royalties. There are plenty more just like it. A suit alleging that every single Apple touch-screen device infringes a patent on technology that has been used exactly twice in museum displays? That one, *Flatworld Interactives, LLC v. Apple Inc.*, 12-cv-1956 (N.D. Cal.), crawls through discovery. Chris Foresman, *Every Touch-Based Ap-*

ple Product Targeted by Apparent Patent Troll, Ars Technica (Apr. 23, 2012), http://arstechnica.com/apple/2012/04/every-touch-based-apple-product-targeted-by-apparent-patent-troll/. A single complaint against *fourteen* Smartphone makers, alleging that each infringes the same single voice-control software patent? Apple and other defendants managed to have their pieces of that one severed and transferred to more convenient forums, but each sliver continues on its own. *See* Order Granting Apple's Motion to Sever, *Potter Voice Techs. v. Apple, Inc.*, 13-cv-1710 (N.D. Cal. Mar. 29, 2013), ECF No. 319. And as long as the targets of all of these suits must bear their fees, the Monecs, Guardians, Flatworlds, and Potters of the world have every incentive to try again and again.

C. The Test for Fee Shifting Should Take Into Account Litigation Conduct

In addition to addressing these considerations, the test for identifying what is "exceptional" should take account of the entire array of relevant conduct including, where applicable, a patent holder's pre-litigation conduct. Section 285, after all, permits courts to award fees in "exceptional *cases*," 35 U.S.C. § 285 (emphasis added), while Rule 11 or the federal courts' inherent authority to impose sanctions tend to apply more comfortably to discrete instances of litigation misconduct. *Cf. Lieb v. Topstone Indus., Inc.*, 788 F.2d 151, 158 (3d Cir. 1986) ("Rule 11 may be applied to only a small segment of the litigation, but the Copyright Act looks to the whole of the case."). Including litigation conduct in the mix of relevant factors under § 285 will deter

the use of sharp and evasive tactics that prolong litigation for purely strategic purposes.

Allcare's conduct with respect to the other claim at issue in *Highmark*, claim 52, illustrates this. Claim 52 contained an element that required "entering ... data symbolic of patent symptoms for tentatively identifying a proposed mode of treatment." *Id.* at 19a. The district court concluded that this limitation covered only a system where a user enters in a patient's symptoms, and the system *automatically* returns the most likely diagnosis and a list of proposed treatments. *Id.* at 19a-20a. Because Highmark's system involved the user manually entering not only symptoms, but also possible diagnoses and treatments, it could not possibly infringe. *Id.*

Ultimately the Federal Circuit agreed wholeheartedly with the district court's decision on the merits, but it disagreed as to the appropriateness of fees. *Id.* at 19a. The panel majority accepted Allcare's argument, advanced for the first time on appeal, that a second possible embodiment of its system might plausibly entail a user manually entering symptoms, diagnoses, and treatments, like Highmark's system. *Id.* at 20a. Applying the requirement that the losing party's position be "objectively unreasonable"—not just unreasonable as argued by the losing party—the panel majority reversed.

The objective reasonableness of a party's infringement allegations are of course an important piece of the analysis under § 285. But a test that treats it as a necessary condition in all cases fails to capture the real story in cases like this one.

Allcare did not advance the argument the Federal Circuit ultimately relied upon before the district court. In other words, it was not itself able to articulate a reasonable justification for maintaining its infringement allegations. Even if it had, though, its own expert conceded as early as June 29, 2007, that Allcare's proposed construction of claim 52—the one that would include entry of symptoms, diagnoses, and treatments—was untenable. *Id.* at 73a. Allcare persisted nonetheless as its expert's concession was adopted in the special master's report, asserted at summary judgment, and eventually relied upon when the district court finally granted summary judgment on August 28, 2008. *Id.* at 48a, 73a-76a. Not only that, Allcare kept its suit alive through evasive tactics, twice shifting its proposed claim construction with respect to claim 52. As the district court concluded, "Allcare's conduct was not part of normal litigation conduct." *Id.* at 77a. Allcare had "continued to pursue meritless allegations as leverage in relation to the opposing party's contentions." *Id.* at 78a.

Section 285 should recognize an obligation on the part of litigants not to multiply or prolong litigation needlessly, engage in unfair or evasive tactics, or otherwise undermine the integrity of the proceedings. Even where, in theory, some reasonable attorney could believe that a suit has a bare chance of success on the merits, fees should still be available where the manifest purpose of the suit, as evidenced by a party's motivations, positions, and conduct, is to extort a settlement. A test that accounts for this broad set of related factors will better serve the goals of patent law.

CONCLUSION

For the foregoing reasons, the Court should adopt a test for determining whether a case brought under the patent laws is "exceptional" that takes into account the nature and motivations of the parties to the litigation, the merits of the parties' positions, and the parties' conduct both before and during litigation.

Respectfully submitted,

E. Joshua Rosenkranz
Christopher J. Cariello
ORRICK, HERRINGTON & SUTCLIFFE LLP
51 W. 52ND ST.
New York, NY 10019
(212) 506-5380
jrosenkranz@orrick.com

Mark S. Davies*
Justin P. Bagdady
ORRICK, HERRINGTON & SUTCLIFFE LLP
1152 15th Street
Washington, D.C. 20005
(202) 339-8631
mark.davies@orrick.com
Counsel of Record

December 9, 2013

AMICUS CURIAE BRIEF

RECORD
AND
BRIEFS

Supreme Court, U.S.
FILED
DEC - 9 2013
OFFICE OF THE CLERK

No. 12-1184

In the Supreme Court of the United States

OCTANE FITNESS, LLC,

Petitioner,

v.

ICON HEALTH & FITNESS, INC.,

Respondent.

On Writ of Certiorari to the United States Court of Appeals for the Federal Circuit

BRIEF OF BSA | THE SOFTWARE ALLIANCE AS *AMICUS CURIAE* IN SUPPORT OF PETITIONER

ANDREW J. PINCUS
Counsel of Record
PAUL W. HUGHES
JAMES F. TIERNEY
Mayer Brown LLP
1999 K Street, NW
Washington, DC 20006
(202) 263-3000
apincus@mayerbrown.com

Counsel for Amicus Curiae

Library of Congress
Law Library

TABLE OF CONTENTS

Table of Authorities iii
Interest of the *Amicus Curiae* 1
Summary of Argument 2
Argument 3
I. Appropriate Fee-Shifting In Patent Cases Is Essential To Stem Abusive Litigation. 3
A. The Enormous Cost Of Patent Cases Opens The Door To Abusive Tactics. 5
B. An Appropriate Fee-Shifting Standard Will Reduce Abusive Tactics. 8
II. A Losing Party—Plaintiff Or Defendant—Should Be Liable For The Winner's Fees Under Section 285 If The Loser's Position Was Objectively Unreasonable. 10
A. The Same Fee-Shifting Standard Applies To Prevailing Plaintiffs And Prevailing Defendants. 10
B. A Case Is "Exceptional" If The Losing Party Maintained An Objectively Unreasonable Position. 12
1. The text of the Patent Act supports the "objectively unreasonable" standard. 13
2. The Federal Circuit's subjective bad faith requirement should be rejected because it renders Section 285 meaningless. 14
a. The common law already authorizes fee-shifting when the loser litigates in bad faith. 15

TABLE OF CONTENTS—continued

b. The Court has repeatedly rejected constructions of fee-shifting statutes that would merely duplicate pre-existing common-law standards. 16

3. The legislative background supports the "objectively unreasonable" standard. 18

4. The construction of other fee-shifting provisions confirms the correctness of the "objectively unreasonable" standard. 21

5. Decisions construing the "objectively unreasonable" standard under other fee-shifting statutes provide clear guidance for applying Section 285. 25

Conclusion 27

TABLE OF AUTHORITIES

CASES

AirFX.com v. *AirFX, LLC*,
2013 WL 857976 (D. Ariz. 2013) 26, 27

Ale House Mgmt., Inc. v.
Raleigh Ale House, Inc.,
205 F.3d 137 (4th Cir. 2000)..... 24, 27

Alyeska Pipeline Serv. Co. v. *Wilderness Soc'y*,
421 U.S. 240 (1975)..... 15

Am. Optometric Soc'y, Inc. v.
Am. Bd. of Optometry, Inc.,
2012 WL 6012861 (C.D. Cal. 2012) 26

B & B Hardware, Inc. v. *Hargis Indus., Inc.*,
716 F.3d 1020 (8th Cir. 2013)..... 23

Bell Atl. Corp. v. *Twombly*,
550 U.S. 544 (2007)..... 6

Blanc v. *Spartan Tool Co.*,
178 F.2d 104 (7th Cir. 1949)..... 19

Bonito Boats, Inc. v.
Thunder Craft Boats, Inc.,
489 U.S. 141 (1989)..... 4

Brooks Furniture Mfg., Inc. v.
Dutailier Int'l, Inc.,
393 F.3d 1378 (Fed. Cir. 2005) 13, 14

Cairns v. *Franklin Mint Co.*,
292 F.3d 1139 (9th Cir. 2002)..... 26

Castillo Grand, LLC v.
Sheraton Operating Corp.,
719 F.3d 120 (2d Cir. 2013) 15

TABLE OF AUTHORITIES—continued

Chambers v. *NASCO, Inc.*,
501 U.S. 32 (1991) 15

Christiansburg Garment Co. v. *EEOC*,
434 U.S. 412 (1978) 17, 22

Classic Media, Inc. v. *Mewborn*,
532 F.3d 978 (9th Cir. 2008) 24

Day v. *Woodworth*,
54 U.S. (13 How.) 363 (1852) 18

Door Sys., Inc. v. *Pro-Line Door Sys., Inc.*,
126 F.3d 1028 (7th Cir. 1997) 23

eBay Inc. v. *MercExchange, L.L.C.*,
547 U.S. 388 (2006) 5, 12

Erlenbaugh v. *United States*,
409 U.S. 239 (1972) 23

FDA v. *Brown & Williamson Tobacco Corp.*,
529 U.S. 120 (2000) 13

Fogerty v. *Fantasy, Inc.*,
510 U.S. 517 (1994) 11, 12

Gazan v. *Vadsco Sales Corp.*,
6 F. Supp. 568 (E.D.N.Y. 1934) 16

Guardian Trust Co. v. *Kansas City S. Ry.*,
28 F.2d 233 (8th Cir. 1928) 16

Hall v. *Keller*,
81 F. Supp. 835 (W.D. La. 1949) 19

Highmark, Inc. v.
Allcare Health Mgmt. Sys., Inc.,
687 F.3d 1300 (Fed. Cir. 2012) 13

TABLE OF AUTHORITIES—continued

Home Show Tours, Inc. v. *Quad City Virtual, Inc.*, 840 F. Supp. 2d 1150 (S.D. Iowa 2012) 26

Indep. Fed'n of Flight Attendants v. *Zipes*, 491 U.S. 754 (1989) 22

KSR Int'l Co. v. *Teleflex Inc.*, 550 U.S. 398 (2007) 12

Laufenberg, Inc. v. *Goldblatt Bros., Inc.*, 187 F.2d 823 (7th Cir. 1951) 20

Lincoln Elec. Co. v. *Linde Air Prods. Co.*, 74 F. Supp. 293 (N.D. Ohio 1947) 19

Martin v. *Franklin Capital Corp.*, 546 U.S. 132 (2005) 21, 22

Mayo Collaborative Servs. v. *Prometheus Labs., Inc.*, 132 S. Ct. 1289 (2012) 3, 4

Newman v. *Piggie Park Enterprises, Inc.*, 390 U.S. 400 (1968) 17

Nightingale Home Healthcare, Inc. v. *Anodyne Therapy, LLC*, 626 F.3d 958 (7th Cir. 2010) 10

Noxell Corp. v. *Firehouse No. 1 Bar-B-Que Rest.*, 771 F.2d 521 (D.C. Cir. 1985) 24

Orrison v. *C. Hoffberger Co.*, 190 F.2d 787 (4th Cir. 1951) 19

Pa. Crusher Co. v. *Bethlehem Steel Co.*, 193 F.2d 445 (3d Cir. 1951) 20

TABLE OF AUTHORITIES—continued

Pierce v. *Underwood*,
487 U.S. 552 (1988) 23, 25

Rolax v. *Atl. Coast Line R.R.*,
186 F.2d 473 (4th Cir. 1951) 16

Samantar v. *Yousuf*,
560 U.S. 305 (2010) 13, 14

Scentsy, Inc. v. *B.R. Chase, LLC*,
2013 WL 4525400 (D. Idaho 2013) 25, 26

Scott & Williams, Inc. v. *Lasticnit Co.*,
1949 WL 4784 (D. Mass. 1949) 20

Secalt S.A. v. *Wuxi Shenxi Constr. Mach. Co.*,
668 F.3d 677 (9th Cir. 2012) 23, 25

Securacomm Consulting, Inc. v.
Securacom Inc.,
224 F.3d 273 (3d Cir. 2000) 24

Singer v. *United States*,
323 U.S. 338 (1945) 14

Stalley v. *Methodist Healthcare*,
517 F.3d 911 (6th Cir. 2008) 15

Teese v. *Huntingdon*,
64 U.S. (23 How.) 2 (1860) 18

Union Nat'l Bank v. *Superior Steel Corp.*,
9 F.R.D. 117 (W.D. Pa. 1949) 20

Universal Oil Products Co. v.
Root Refining Co.,
328 U.S. 575 (1946) 15, 16

TABLE OF AUTHORITIES—continued

Vischer Prods. Co. v. *Nat'l Pressure Cooker Co.*, 92 F. Supp. 138 (W.D. Wis. 1950) 20

STATUTES & LEGISLATIVE MATERIALS

15 U.S.C. § 1117 23

28 U.S.C. § 1447(c) 21, 22

28 U.S.C. § 2412(d) 22

35 U.S.C. § 70 (1946) 18

35 U.S.C. § 285 ..... *passim*

Patent Act of 1946, 60 Stat. 778 18

Pub. L. No. 82-593, 66 Stat. 792 15

S. Rep. No. 1503 (1946), reprinted in Vincent P. Tassinari, *Compiled Legislative History of 35 U.S.C. § 284: The Patent Compensation Statute*, 31 UWLA L. Rev. 45, 89 (2000) 11

S. Rep. No. 82-1979, reprinted at 1952 U.S.C.C.A.N. 2394 19

OTHER AUTHORITIES

5 *McCarthy on Trademarks and Unfair Competition* (4th ed. 2009) 24

Am. Intellectual Prop. Law Ass'n, Report of the Economic Survey 2011 (2011) 5

Brian J. Love & James C. Yoon, *Expanding Patent Law's Customer Suit Exception*, 93 B.U. L. Rev. 1605 (2013) 7

TABLE OF AUTHORITIES—continued

Colleen V. Chien, *Startups & Patent Trolls*, Santa Clara Univ. Legal Studies Research Paper No. 09-12 (Sept. 28, 2012), ... 7

David Rosenberg & Steven Shavell, *A Model in Which Suits Are Brought for Their Nuisance Value*, 5 Int'l R. of L. & Econ. 3 (1985) 6, 9

Executive Office of the President, *Patent Assertion & U.S. Innovation* (2013) 6, 7, 8

James C. Pistorino, *2012 Trends in Patent Case Filings and Venue* (Feb. 2013) 9

James E. Bessen & Michael J. Meurer, *The Direct Costs from NPE Disputes*, 99 Cornell L. Rev. __ (forthcoming 2014) 7

Marie Gryphon, *Assessing the Effects of a "Loser Pays" Rule on the American Legal System: An Economic Analysis and Proposal for Reform*, 8 Rutgers J.L. & Pub. Pol'y 567 (2011) 7, 8, 9

Ranganath Sudarshan, *Nuisance-Value Patent Suits: An Economic Model and Proposal*, 25 Santa Clara Computer & High Tech. L.J. 159 (2009) 5, 6

Richard A. Posner, *Antitrust in the New Economy*, 68 Antitrust L.J. 925 (2001) 4

United States Courts, *Judicial Business 2012* (Sept. 2012) 9

BRIEF OF BSA | THE SOFTWARE ALLIANCE AS *AMICUS CURIAE* IN SUPPORT OF PETITIONER

INTEREST OF THE *AMICUS CURIAE*

BSA | The Software Alliance is an association of the world's leading software and hardware technology companies. On behalf of its members, BSA promotes policies that foster innovation, growth, and a competitive marketplace for commercial software and related technologies. BSA members pursue patent protection for their intellectual property and as a group hold a large number of patents. They also create products that are frequently subject to unjustified patent infringement claims. Because patent policy is vitally important to promoting the innovation that has kept the United States at the forefront of software and hardware development, BSA members have a strong stake in the proper functioning of the U.S. patent system.[1]

The members of the BSA include Adobe, Apple, Autodesk, AVEVA, AVG, Bentley Systems, CA Technologies, CNC/Mastercam, Dell, IBM, Intel, McAfee, Microsoft, Minitab, Oracle, Parametric Technology Corporation, Progress Software, Quest Software, Rosetta Stone, Siemens PLM, Symantec, TechSmith, and The MathWorks.

---

[1] Pursuant to Rule 37.6, *amicus* affirms that no counsel for a party authored this brief in whole or in part and that no person other than *amicus* and its counsel made a monetary contribution to its preparation or submission. The parties' letters consenting to the filing of this brief have been filed with the Clerk's office.

SUMMARY OF ARGUMENT

The Patent Act permits a prevailing party to recover its fees in "exceptional cases." 35 U.S.C. § 285. When a litigant maintains a claim or defense that is objectively unreasonable—that lacks a reasonable basis in law or fact—the case is "exceptional," and the losing party should pay the prevailing party's fees.

An appropriate fee-shifting standard under Section 285 is critical to maintaining the fundamental balance embodied in our patent law: fostering innovation by protecting patent holders while not unduly burdening those who engage in legal, productive competition. Absent fee-shifting, litigants may exploit asymmetries in litigation—such as the difference in costs between prosecuting and defending a suit or differences in resources—for tactical advantage. Properly calibrated fee-shifting eliminates the incentives to engage in these abusive practices.

Section 285 does not distinguish between prevailing plaintiffs and prevailing defendants. The same fee-shifting standard therefore should apply regardless of the party that prevails.

The "objectively unreasonable" standard—which this Court has found appropriate under other fee-shifting statutes—provides the proper framework for determining when fees should be shifted under Section 285. A losing litigant that persists in advocating a claim or defense lacking an objective basis in law or fact should pay the winning party's fees.

For example, if a plaintiff continues to press a claim even though an objective observer would conclude that there is no reasonable basis to find infringement, fees should be available to a prevailing

defendant. Similarly, a defendant that presses an unreasonable non-infringement argument and loses should be liable for fees.

The Federal Circuit conditions fee-shifting under Section 285 on proof that a litigant took *both* an objectively unreasonable position *and* acted with subjective bad faith. That test is contrary to the text of the Patent Act, would render Section 285 a nullity (because fee-shifting is already available under the common law and Rule 11 upon proof of subjective bad faith), ignores the legislative background, and is at odds with the approach that this Court has taken in comparable fee-shifting provisions. A prevailing party need not demonstrate that its adversary engaged in subjective bad faith in order to recover fees under Section 285.

ARGUMENT

I. Appropriate Fee-Shifting In Patent Cases Is Essential To Stem Abusive Litigation.

The fundamental purpose of the Patent Act is to promote innovation, but this Court has repeatedly recognized that innovation can be impeded by overbroad patent protection as well as by unduly limited patent protection.

Patents provide "the promise of exclusive rights," which create "monetary incentives that lead to creation, invention, and discovery." *Mayo Collaborative Servs.* v. *Prometheus Labs., Inc.*, 132 S. Ct. 1289, 1305 (2012). At the same time, however, "that very exclusivity can impede the flow of information that might permit, indeed spur, invention, by, for example, raising the price of using the patented ideas once created, requiring potential users to conduct costly and time-consuming searches of existing patents and

pending patent applications, and requiring the negotiation of complex licensing arrangements." *Ibid.* Thus, improperly balanced patent rights may "tend to impede innovation more than it would tend to promote it." *Id.* at 1293.

For this reason, the Court has long emphasized that the Patent Act is designed to protect both patent holders as well as legitimate market participants improperly accused of infringement. "From their inception, the federal patent laws have embodied a careful balance between the need to promote innovation and the recognition that imitation and refinement through imitation are both necessary to invention itself and the very lifeblood of a competitive economy." *Bonito Boats, Inc.* v. *Thunder Craft Boats, Inc.*, 489 U.S. 141, 146 (1989). See also Richard A. Posner, *Antitrust in the New Economy*, 68 Antitrust L.J. 925, 927 (2001) ("The patent * * * laws try to strike the output-maximizing balance by giving the creator of intellectual property some but not complete protection from competition.").

One critical aspect of achieving that proper balance is ensuring that parties do not have financial incentives to press unreasonable claims or unreasonable defenses. Given the enormous costs involved in litigating a patent dispute, parties may improperly leverage asymmetries (such as asymmetrical costs between prosecuting and defending a case or asymmetrical resources) for strategic advantage. But those tactics—which treat patent litigation as a means of extracting value from entities regardless of the underlying merit of a claim—fundamentally upset the proper balance that is the design of the Patent Act. Fee shifting in appropriate circumstances,

as Congress provided in Section 285, is an important protection against such abusive practices.

A. The Enormous Cost Of Patent Cases Opens The Door To Abusive Tactics.

Patent litigation is enormously expensive, and the costs are growing. A 2011 survey by the American Intellectual Property Law Association indicates that the median cost of a medium-sized patent litigation is approximately six million dollars per party, double the cost reported in 2009 and four times the cost reported in 2001. Am. Intellectual Prop. Law Ass'n, Report of the Economic Survey 2011, at I-155 to I-156 (2011).

These extraordinary expenses and pressures on businesses permit parties to benefit from abusive litigation tactics. "[T]he greatest factor contributing to the existence of nuisance-value patent suits is the high cost of patent litigation." Ranganath Sudarshan, *Nuisance-Value Patent Suits: An Economic Model and Proposal*, 25 Santa Clara Computer & High Tech. L.J. 159, 172 (2009).

The tremendous litigation cost may, for example, permit a plaintiff to improperly obtain a substantial settlement of a claim regardless of the underlying merits. As members of the Court have recognized, patent litigation—particularly coupled with the threat of a possible injunction—"can be employed as a bargaining tool to charge exorbitant fees to companies that seek to buy licenses to practice the patent." *eBay Inc.* v. *MercExchange, L.L.C.*, 547 U.S. 388, 396 (2006) (Kennedy, J., concurring). Such litigation can be "employed simply for undue leverage in negotiations." *Ibid.* Given that "the threat of discovery expense will push cost-conscious defendants to settle

even anemic cases before reaching those proceedings" (*Bell Atl. Corp.* v. *Twombly*, 550 U.S. 544, 559 (2007)), there is little doubt that the larger total cost of mounting a defense will have that same effect.

In fact, economic theory demonstrates that, absent fee-shifting, *whenever* the cost to a plaintiff of filing a suit (i.e., the filing fee and cost of the plaintiff's lawyer) exceeds the cost to a defend the suit, it is in the plaintiff's interest to sue *regardless* of the merits of the claim. See David Rosenberg & Steven Shavell, *A Model in Which Suits Are Brought for Their Nuisance Value*, 5 Int'l R. of L. & Econ. 3 (1985). In these circumstances, an economically rational defendant—even one who believes that a claim is wholly meritless—will settle a suit for the cost to defend. *Ibid.* See also Sudarshan, 25 Santa Clara Computer & High Tech. L.J. at 161-169 (providing similar economic model for nuisance value suits in patent context).

A recent White House report recognized this precise danger. It concluded that patent owners may seek "to settle out of court for amounts that have not so much to do with the economic value of their patents or the probability that they have infringed;" rather, settlements are "affected more by the parties' relative opportunity costs of going to trial and attitudes towards risk." Executive Office of the President, *Patent Assertion & U.S. Innovation*, at 6 (2013), http://tinyurl.com/lvk6ajl. When parties face asymmetrical costs—such as when plaintiffs have lower costs than defendants—they may "have an incentive to drag out litigation, to increase pressure on defendants to settle the case." *Ibid.*

The impact of patent lawsuits "on smaller startups is particularly acute." *Patent Assertion &*

U.S. Innovation, supra, at 10. One survey indicates that, over an approximately six-year period, roughly 66% of unique patent defendants are firms with annual revenue of less than $100 million. Colleen V. Chien, *Startups & Patent Trolls*, Santa Clara Univ. Legal Studies Research Paper No. 09-12, at 1-2 (Sept. 28, 2012), http://tinyurl.com/pp3ap57. Forty percent of companies sued represented that the lawsuit caused a "significant operational impact," such as "delayed hiring or achievement of another milestone, change in the product, a pivot in business strategy, a shut-down business line or the entire business, and/or lost valuation." *Id.* at 2. See also James E. Bessen & Michael J. Meurer, *The Direct Costs from NPE Disputes*, 99 Cornell L. Rev. __ (forthcoming 2014), available at http://tinyurl.com/lca4rga. Commentators have thus noted that "small companies—not tech giants—are the predominant targets" in certain abusive lawsuits. Brian J. Love & James C. Yoon, *Expanding Patent Law's Customer Suit Exception*, 93 B.U. L. Rev. 1605, 1611 (2013).

Because small businesses are uniquely vulnerable to these pressures (*Patent Assertion & U.S. Innovation, supra*, at 7), abusive litigation tactics may also be undertaken by defendants. A defendant with resources that vastly dwarf a plaintiff may maintain a defense that is either factually or legally unreasonable so as to drive up the plaintiff's costs. See Marie Gryphon, *Assessing the Effects of a "Loser Pays" Rule on the American Legal System: An Economic Analysis and Proposal for Reform*, 8 Rutgers J.L. & Pub. Pol'y 567, 569 (2011) ("[P]otential plaintiffs with injuries that are significant but worth less than their lawyers' fees can be denied access to justice entire-

ly."). This, too, can be a means for forcing a settlement not justified by the merits of the case.

These abusive litigation practices are a drain on the economy, siphoning value from productive businesses. At bottom, it is consumers who bear the brunt of this abuse—either through increased prices for goods and services or through the reduction in innovation. "[L]ow-merit legal cases clog the American legal system and raise the cost of goods and services to consumers by forcing businesses that are sued to cover their legal expenses by raising prices." Gryphon, 8 Rutgers J.L. & Pub. Pol'y at 568.

The White House report also recognized the "[s]ocial costs of reduced innovation," as "the losses caused by excessive litigation exceed even the large stock market losses." *Patent Assertion & U.S. Innovation*, *supra*, at 10. This "include[es] lost value to consumers who are not able to buy innovative products, and reduced income for workers whose pay is lower because they are unable to work with more productive new processes." *Ibid.*

B. An Appropriate Fee-Shifting Standard Will Reduce Abusive Tactics.

Fee-shifting in appropriate cases can reduce these abusive tactics. By addressing in part the cost and resource asymmetries inherent in this type of litigation, fee-shifting plays a significant role in removing the financial incentive for abusive claims or defenses. In order to maintain the balance that lies at the heart of the Patent Act, therefore, this Court should interpret the statute to provide fee shifting in appropriate cases—*i.e.*, when a plaintiff maintains a factually or legally unreasonable claim, or a defend-

ant persists in pressing a similarly unreasonable defense.

Fee-shifting's effect stems from basic economics: "there is broad consensus that a loser pays rule would reduce the number of nuisance suits." *Gryphon*, 8 Rutgers J.L. & Pub. Pol'y at 581. Forced to include in its litigation strategy the risk of fee-shifting, a party's expected costs turns heavily on its likelihood of prevailing. Rosenberg & Shavell, 5 Int'l R. of L. & Econ. at 5. By forcing parties to assess the reasonableness of their asserted claims and defenses, fee-shifting creates a significant motivation for parties to self-police their arguments.

Such self-imposed restraint is increasingly important as the numbers of parties embroiled in patent lawsuits balloons, inundating courts across the country. *See, e.g.*, United States Courts, *Judicial Business 2012* at tbl. C-2A, page 3 (Sept. 2012), http://tinyurl.com/pwxdtan (noting that the number of patent lawsuits commenced rose from 2,909 in 2008 to 5,189 in 2012). In 2012 alone, 12,647 defendants were sued in those patent infringement cases. See James C. Pistorino, *2012 Trends in Patent Case Filings and Venue*, at 3 tbl.1 (Feb. 2013), http://tinyurl.com/lpfbzyp.

At bottom, the fee-shifting mechanism of Section 285 should ensure that parties have a financial incentive not to assert objectively meritless positions. This result would accord with the fundamental purpose of the Patent Act—to ensure that *legitimate* patent rights are protected, without unduly impeding the lawful and productive economic activity of competitors.

The Federal Circuit's current Section 285 standard, which conditions fee-shifting on proof of subjective bad faith, prevents proper operation of the statute. Requiring the prevailing party to adduce "smoking gun" evidence of subjective intent effectively bars fee-shifting. It licenses litigants to engage in illegitimate practices that are "extortionate in character if not necessarily in provable intention." *Nightingale Home Healthcare, Inc.* v. *Anodyne Therapy, LLC*, 626 F.3d 958, 965 (7th Cir. 2010) (Posner, J.).

II. A Losing Party—Plaintiff Or Defendant—Should Be Liable For The Winner's Fees Under Section 285 If The Loser's Position Was Objectively Unreasonable.

This case brings before the Court two questions regarding the fee-shifting provision of the Patent Act, 35 U.S.C. § 285. First, whether the same standard should apply with respect to prevailing plaintiffs and prevailing defendants, and, second, what that standard should be. Relevant precedent, history, and common sense dictate a clear answer to these questions: a losing party should be liable for the winner's fees when the losing party's position was objectively unreasonable.

A. The Same Fee-Shifting Standard Applies To Prevailing Plaintiffs And Prevailing Defendants.

Section 285 does not differentiate between prevailing plaintiffs and prevailing defendants. It holds that "[t]he court in exceptional cases may award reasonable attorney fees to the prevailing party." 35 U.S.C. § 285. This language compels the conclusion that the standard for awarding fees to a prevailing

plaintiff is the same as that for awarding fees to a prevailing defendant.

The Court's analysis in *Fogerty* v. *Fantasy, Inc.*, 510 U.S. 517 (1994), which addressed this question in the context of the fee-shifting provision of the Copyright Act, is dispositive of the issue. The *Fogerty* Court held that "[p]revailing plaintiffs and prevailing defendants are to be treated alike" for purposes of the Copyright Act's fee-shifting provision. *Id.* at 534.

In reaching that conclusion, the Court looked to "fee-shifting statutes in the patent and trademark fields, which are * * * closely related to that of copyright." *Fogerty*, 510 U.S. at 525 n.12. Section 285, the Court explained, "support[s] a party-neutral approach." *Ibid.*

Moreover, the considerations that motivated *Fogerty* apply with full force here. The Court first determined that the statutory language gave "no hint that successful plaintiffs are to be treated differently from successful defendants." *Fogerty*, 510 U.S. at 522. So too here; Section 285 is neutral on its face.

Next, the Court noted that the legislative history of the Copyright Act was effectively silent (in sharp contrast to the history regarding fee-shifting provisions in certain civil rights acts). *Fogerty*, 510 U.S. 523-525. Here, far from being silent, the relevant legislative history shows that Congress intended to provide fee-shifting for both prevailing plaintiffs and defendants. The Senate Report issued in conjunction with the fee-shifting provision of the Patent Act of 1946 (the precursor to Section 285, see, *infra*, 18-20) indicates that fee-shifting was established to "discourage infringement" *as well as* to "prevent a gross injustice to an alleged infringer." S. Rep. No. 1503, at

3 (1946), reprinted in Vincent P. Tassinari, *Compiled Legislative History of 35 U.S.C. § 284: The Patent Compensation Statute*, 31 UWLA L. Rev. 45, 89 (2000).

Finally, the Court concluded that, because the fundamental policy of the Copyright Act is to "enrich[] the general public through access to creative works"—which the statute accomplishes by providing appropriately balanced incentives for creators of copyrighted works—"a successful defense of a copyright infringement action may further the policies of the Copyright Act every bit as much as a successful prosecution of an infringement claim." *Fogerty*, 510 U.S. at 527. The Patent Act is no different; improper assertion of a patent claim "might stifle, rather than promote, the progress of useful arts." *KSR Int'l Co.* v. *Teleflex Inc.*, 550 U.S. 398, 427 (2007).

Because of the significant similarities between the Copyright Act and the Patent Act (see *eBay Inc.*, 547 U.S. at 392), *Fogerty* controls the question here. The same standard for fee-shifting applies to both prevailing plaintiffs and prevailing defendants.

B. A Case Is "Exceptional" If The Losing Party Maintained An Objectively Unreasonable Position.

Unlike the Copyright Act, the Patent Act prescribes a standard for determining when fee-shifting is appropriate: a court may award attorney's fees in "exceptional cases." 35 U.S.C. § 285. The text of the Patent Act, the backdrop of the common law, the legislative history, and the Court's interpretation of similar statutes all compel the same result—a showing that the losing party maintained a material, ob-

jectively unreasonable position is a *sufficient* basis to render a case "exceptional."

The Federal Circuit, by contrast, requires a showing of *both* objective unreasonableness *and* subjective bad faith. That is, a case is "exceptional" only if it involves "misconduct" or if "both (1) the litigation is brought in subjective bad faith, and (2) the litigation is objectively baseless." *Brooks Furniture Mfg., Inc.* v. *Dutailier Int'l, Inc.*, 393 F.3d 1378, 1381 (Fed. Cir. 2005). See also *Highmark, Inc.* v. *Allcare Health Mgmt. Sys., Inc.*, 687 F.3d 1300, 1308-09 (Fed. Cir. 2012) (To qualify as "exceptional," a claim must be both "objectively baseless" and asserted in "subjective bad faith."), cert. granted, 134 S. Ct. 48 (2013). The Federal Circuit's inclusion of a bad faith element finds no support in the relevant authorities.

1. The text of the Patent Act supports the "objectively unreasonable" standard.

Although Section 285 does not itself provide a definition of the term "exceptional," another provision of the Patent Act, Section 273, bears heavily on this question. It is fundamental that "[a] court must * * * interpret the statute as a symmetrical and coherent regulatory scheme, and fit, if possible, all parts into an harmonious whole." *FDA* v. *Brown & Williamson Tobacco Corp.*, 529 U.S. 120, 133 (2000) (quotations & citations omitted). The Court "do[es] not construe statutory phrases in isolation; [it] read[s] statutes as a whole." *Samantar* v. *Yousuf*, 560 U.S. 305, 319 (2010) (quotations omitted).

Section 273 provides a defense to infringement in the event of certain prior commercial uses. 35 U.S.C. § 273. If a defendant invokes this defense but loses, Section 273(f) directs that a court shall "find the case

exceptional for the purpose of awarding attorney fees under section 285," unless the defendant demonstrates a "*reasonable* basis for asserting the defense." *Id.* § 273(f) (emphasis added). An "[u]nreasonable assertion of [the] defense" is thus a sufficient basis to render a case "exceptional" under Section 285. *Ibid.* Accordingly, Section 273(f) thus makes clear that a case may qualify as "exceptional" for purposes of Section 285 *without* a showing of subjective bad faith. Reading the statute as a whole, this provision thus provides strong support for a similar definition of Section 285. See *Samantar*, 560 U.S. at 319.

The Federal Circuit's interpretation of Section 285, by contrast, has no basis in the statutory language. Indeed, the court did not even attempt to justify its bad faith requirement based on the provision's text. See, *e.g.*, *Brooks Furniture*, 393 F.3d 1378.

2. The Federal Circuit's subjective bad faith requirement should be rejected because it renders Section 285 meaningless.

The Federal Circuit's subjective bad faith requirement violates another, equally fundamental principle of statutory construction—it would make Section 285 completely unnecessary. A statute should not be given a "construction which makes it wholly redundant." *Singer* v. *United States*, 323 U.S. 338, 344 (1945).

Litigating in bad faith is a *sufficient* basis to award attorney's fees *as a matter of common law*. This is just as true today as it was in 1952, when Congress wrote Section 285. Thus, if the Federal Circuit's view were correct and Section 285 requires a subjective bad faith showing, Congress's enactment

of the provision would have had no effect: fee-shifting would be limited to the same category of cases in which it was available before the statue was enacted.

a. *The common law already authorizes fee-shifting when the loser litigates in bad faith.*

Under the "American Rule," "the prevailing litigant is ordinarily not entitled to collect a reasonable attorneys' fee from the loser." *Alyeska Pipeline Serv. Co.* v. *Wilderness Soc'y*, 421 U.S. 240, 247 (1975). But that common law rule is subject to exceptions; relevant here, "a court may assess attorneys' fees" where "the losing party has acted in bad faith, vexatiously, wantonly, or for oppressive reasons." *Id.* at 259-260 (quotations omitted). See also *Chambers* v. *NASCO, Inc.*, 501 U.S. 32, 45-46 (1991) ("[A] court may assess attorney's fees when a party has acted in bad faith, vexatiously, wantonly, or for oppressive reasons." (quotations omitted)).

Thus, courts routinely recognize the power to award attorney's fees to a prevailing party when the loser litigated in bad faith. See, *e.g.*, *Castillo Grand, LLC* v. *Sheraton Operating Corp.*, 719 F.3d 120, 124 (2d Cir. 2013); *Stalley* v. *Methodist Healthcare*, 517 F.3d 911, 920 (6th Cir. 2008).

This rule was equally well-established in 1952 when Congress enacted Section 285. See Act of July 19, 1952, Pub. L. No. 82-593, ch. 950, § 285, 66 Stat. 792, 813. In fact, just a few years prior to the Patent Act of 1952, this Court applied exactly this principle in a patent case. In *Universal Oil Products Co.* v. *Root Refining Co.*, 328 U.S. 575, 580 (1946), the Court explained that a federal court has "inherent power" to award attorney's fees in certain circum-

stances. A party's bad faith—i.e., committing a fraud on the court—was "precisely a situation where 'for dominating reasons of justice' a court may assess counsel fees as part of the taxable costs." *Ibid.*

The lower courts had likewise held that a litigant's bad faith was a sufficient basis for fee-shifting as a matter of common law. See, *e.g.*, *Rolax* v. *Atl. Coast Line R.R.*, 186 F.2d 473, 481 (4th Cir. 1951) (holding fees are appropriate where a litigant engages in "discriminatory and oppressive conduct"); *Guardian Trust Co.* v. *Kansas City S. Ry.*, 28 F.2d 233, 241 (8th Cir. 1928) (holding fees appropriate "[w]here the main ground of the suit is false, unjust, vexatious, wanton, or oppressive, and so shown to be"), aff'd, 281 U.S. 1 (1930); *Gazan* v. *Vadsco Sales Corp.*, 6 F. Supp. 568, 568 (E.D.N.Y. 1934) (holding fees appropriate where a suit is "brought solely for the purpose of annoying and harassing the defendant corporation").

The Federal Circuit's requirement of bad faith thus limits Section 285 to the set of cases in which fee-shifting already was available.

b. *The Court has repeatedly rejected constructions of fee-shifting statutes that would merely duplicate pre-existing common-law standards.*

In construing other fee-shifting provisions, the Court has repeatedly rejected interpretations that would render the statutory enactment duplicative of the common law. That framework applies equally here and precludes an interpretation of Section 285 requiring a showing of subjective bad faith.

In *Newman* v. *Piggie Park Enterprises, Inc.*, 390 U.S. 400, 402 n.4 (1968) (per curiam), for example, the Court rejected the argument that the fee-shifting provision of Title II of the Civil Rights Act of 1964 was limited to "defendants who make completely groundless contentions for purposes of delay." If this had been "Congress' objective," "no new statutory provision would have been necessary, for it has long been held that a federal court may award counsel fees to a successful plaintiff where a defense has been maintained 'in bad faith, vexatiously, wantonly, or for oppressive reasons.'" *Ibid.* The fact that Congress enacted the statute was decisive evidence that it intended to expand fee-shifting beyond the common law. *Ibid.*

The Court applied this same approach in *Christiansburg Garment Co.* v. *EEOC*, 434 U.S. 412, 419 (1978). Interpreting Title VII of the Civil Rights Act, the Court rejected the argument that an "award of attorney's fees to a prevailing defendant" was limited to the plaintiff's subjective bad faith. Just as in *Piggie Park*, "if that had been the intent of Congress, no statutory provision would have been necessary, for it has long been established that even under the American common-law rule attorney's fees may be awarded against a party who has proceeded in bad faith." *Ibid.*

Piggie Park and *Christiansburg Garment*, coupled with the backdrop of the common law, thus foreclose the argument that Section 285 requires a showing of subjective bad faith. The Court should not interpret the statute in a way that would render it meaningless.

3. The legislative background supports the "objectively unreasonable" standard.

The background against which Congress legislated also demonstrates that Congress embraced the "objectively unreasonable" standard.

Congress adopted the term "exceptional" to codify the approaches that courts had taken with respect to the fee-shifting provision contained in the Patent Act of 1946 (the 1946 Act). Because several courts interpreted the 1946 Act as establishing an "objectively unreasonable" standard, Congress is best understood as having endorsed that view in its adoption of Section 285.

The legislative history underlying Section 285 of the Patent Act of 1952 indicates that Congress intended to codify the judicial constructions of the fee-shifting provision contained in the 1946 Act.

Prior to 1946, the Court had long held that "counsel fees were not recoverable as damages" in ordinary patent infringement suits. *Teese* v. *Huntingdon*, 64 U.S. (23 How.) 2, 8 (1860). See also *Day* v. *Woodworth*, 54 U.S. (13 How.) 363, 372 (1852).

In the Patent Act of 1946, Congress first crafted an express fee-shifting provision for patent cases. See Act of August 1, 1946, ch. 726, § 1, 60 Stat. 778. The statute provided that a "court may in its discretion award reasonable attorney's fees to the prevailing party upon the entry of judgment on any patent case." *Ibid.*, codified at 35 U.S.C. § 70 (1946).

In 1952, Congress substantially overhauled the Patent Act. 66 Stat. 813. The Senate Report discussing Section 285 explained that "[t]his section is substantially the same as the corresponding provision

in" the 1946 Act, except that the language "'in exceptional cases' has been added as expressing the intention of the present statute as shown by its legislative history and as interpreted by the courts." S. Rep. No. 82-1979, reprinted at 1952 U.S.C.C.A.N. 2394, 2423. Congress, accordingly, intended to codify the judicial interpretations of the fee-shifting provision in the 1946 Act.

The prevailing interpretation in 1952 was that fee-shifting was available when the position of either the plaintiff or the defendant was objectively unreasonable.

In *Blanc* v. *Spartan Tool Co.*, 178 F.2d 104, 105 (7th Cir. 1949), for example, the Seventh Circuit affirmed an award of fees given "the character" of the patents, "the construction of defendant's devices charged herein to be infringed, and the decisions of other courts in relation to said patents prior to the institution of the present suit." There was no finding of bad faith. *Ibid.*

Likewise, a district court applied the "unreasonable" test; it denied fees only because it found the position advocated by the litigant to be reasonable. *Lincoln Elec. Co.* v. *Linde Air Prods. Co.*, 74 F. Supp. 293, 294 (N.D. Ohio 1947). Once again, there was no consideration of bad faith.

Beyond *Spartan Tool* and *Lincoln Electric*, several other cases held that the standard for fee-shifting under the 1946 Act turned on whether the losing party had urged a position that was objectively unreasonable. See, *e.g.*, *Orrison* v. *C. Hoffberger Co.*, 190 F.2d 787, 791 (4th Cir. 1951) (affirming fee-shifting where "there was no reasonable ground for the prosecution of the motion"); *Hall* v. *Keller*, 81 F.

Supp. 835, 836 (W.D. La. 1949) (declining to award fees where there "was mutual probable cause for the suit," and "either side could well and reasonably have filed the suit"); *Union Nat'l Bank* v. *Superior Steel Corp.*, 9 F.R.D. 117, 121 (W.D. Pa. 1949) (denying attorney's fees where there was no showing "that plaintiff was not justified in bringing defendant into court").

Several other decisions recognized that a party's maintenance of an objectively unreasonable position was a sufficient basis to shift fees—while also recognizing that bad faith was an *independent* basis for fee-shifting.[2] See, *e.g.*, *Pa. Crusher Co.* v. *Bethlehem Steel Co.*, 193 F.2d 445, 451 (3d Cir. 1951) (noting that "[d]ecisions construing" the fee-award statute have "indicated that fraud practiced on the Patent Office or vexatious *or unjustified litigation* are adequate justification for awarding attorneys' fees" (emphasis added)); *Laufenberg, Inc.* v. *Goldblatt Bros., Inc.*, 187 F.2d 823, 825 (7th Cir. 1951) (noting that "the statute should be invoked only where vexatious *or unjustified litigation* is shown" (emphasis added)); *Vischer Prods. Co.* v. *Nat'l Pressure Cooker Co.*, 92 F. Supp. 138, 139 (W.D. Wis. 1950) (concluding that fees should be limited to a "penalty or fine imposed on the losing party because of his conduct in instituting and maintaining the action *without justification* or in bad faith" (emphasis added)); *Scott & Williams, Inc.* v. *Lasticnit Co.*, 1949 WL 4784, at *1 (D. Mass.

---

[2] Our position is not to the contrary; insofar as the common law permits fee-shifting in cases of bad faith or other misconduct (see, *supra*, 15-16), that *is* an appropriate basis to award fees. The question at issue here is whether objective unreasonable is, by itself, a *sufficient* basis to shift fees.

1949) (denying fees where the "suit was not *groundless* nor vexatious" (emphasis added)).

In sum, in codifying the judicial interpretations of the 1946 Act by enacting Section 285, Congress adopted the "objectively unreasonable" test.

4. The construction of other fee-shifting provisions confirms the correctness of the "objectively unreasonable" standard.

Finally, the "objectively unreasonable" standard accords with the approach this Court has taken to comparable fee-shifting regimes. It also is in line with the construction that several courts have given to identical language in the Lanham Act.

a. In other contexts in which Congress has authorized a prevailing party to recover fees in some but not all cases, this Court has interpreted the statute to adopt the objectively unreasonable standard. Section 285 should be read in the same manner.

Martin v. *Franklin Capital Corp.*, 546 U.S. 132 (2005), involved 28 U.S.C. § 1447(c), which states that fees "may" be awarded when a litigant improperly removes a lawsuit to federal court. Although the statute contained no "express legislative restrictions," the Court determined that Congress intended to strike a balance: it did not mean to "discourage[e]" removal "in all but obvious cases," but it did seek "to deter removals sought for the purpose of prolonging litigation and imposing costs on the opposing party." *Martin*, 546 U.S. at 140. In light of these considerations, the Court concluded that, "[a]bsent unusual circumstances, courts may award attorney's fees * * * only where the removing party lacked an objectively reasonable basis for seeking removal." *Id.* at 141.

Like Section 1447(c), Section 285 indicates that a district court "*may*" award attorney's fees, connoting judicial discretion. And, as with Section 1447(c), Congress surely did not mean to discourage assertion of all but "obvious" patent claims or defenses. At the same time, Congress certainly did seek to deter claims or defenses that prolong litigation and impose needless cost. The approach taken in *Martin*, accordingly, applies with equal force here.

Similarly, the Court in *Christiansburg Garment* considered the standard governing when a prevailing defendant may recover fees under the Civil Rights Act of 1964. The Court again adopted the objectively unreasonable standard: a defendant may recover if a plaintiff's case is "groundless or without foundation." *Christiansburg Garment*, 434 U.S. at 421. This "in no way implies that the plaintiff's subjective bad faith is a necessary prerequisite to a fee award against him." *Ibid.* Rather "a district court may in its discretion award attorney's fees to a prevailing defendant in a Title VII case upon a finding that the plaintiff's action was frivolous, unreasonable, or without foundation, *even though not brought in subjective bad faith.*" *Ibid.* (emphasis added). See also *Indep. Fed'n of Flight Attendants* v. *Zipes*, 491 U.S. 754, 761 (1989) (permitting fees under Title VII against a losing intervenor whose action is "frivolous, unreasonable, or without foundation").

Finally, this Court took a similar approach with respect to the Equal Access to Justice Act. That statute provides fee-shifting against the government where its position is not "substantially justified." 28 U.S.C. § 2412(d)(1)(B). The Court concluded that a case is "substantially justified" under the statute when it is "justified to a degree that could satisfy a

reasonable person," or, in other words, has a "'reasonable basis both in law and fact.'" *Pierce* v. *Underwood*, 487 U.S. 552, 565 (1988).

These decisions demonstrate that discretionary fee-shifting provisions often turn on a showing of objective unreasonableness, and that this standard is both workable in practice and properly calibrates the relevant interests.

b. Like Section 285, the Lanham Act also provides fee-shifting to a "prevailing party" in "exceptional cases." 15 U.S.C. § 1117. The same standard, therefore, should control both provisions. *Erlenbaugh* v. *United States*, 409 U.S. 239, 243 (1972) ("[A] legislative body generally uses a particular word with a consistent meaning in a given context.").

Several courts have correctly held that an "objectively unreasonable" claim or defense renders a trademark case "exceptional."

The Seventh Circuit, for example, holds that a case may be "exceptional * * * because of lack of merit * * * *even though* the plaintiff honestly though mistakenly believes that he has a good case and is not merely trying to extract a settlement based on the suit's nuisance value." *Door Sys., Inc.* v. *Pro-Line Door Sys., Inc.*, 126 F.3d 1028, 1032 (7th Cir. 1997) (emphasis added).

Other courts have taken the same approach, finding that an unreasonable position is a *sufficient* basis to render a case exceptional under the Lanham Act. See, *e.g.*, *B & B Hardware, Inc.* v. *Hargis Indus., Inc.*, 716 F.3d 1020, 1027 (8th Cir. 2013) ("When a plaintiff's case is groundless, unreasonable, vexatious, or pursued in bad faith, it is exceptional" (quotations omitted)); *Secalt S.A.* v. *Wuxi Shenxi Constr.*

Mach. Co., 668 F.3d 677, 687-88 (9th Cir. 2012) ("[E]xceptional cases include instances where plaintiff's case is frivolous or completely lacking in merit."); *Classic Media, Inc.* v. *Mewborn*, 532 F.3d 978, 990 (9th Cir. 2008) (a case is "exceptional" where "'the non-prevailing party's case is groundless, unreasonable, vexatious, or pursued in bad faith'").[3]

As one treatise explains, the Lanham Act's fee-shifting provision "creates the possibility of an award of attorney's fees to a prevailing defendant because of the *objective lack of merit* of the lawsuit even though the plaintiff subjectively and honestly, but mistakenly, believed it to be a meritorious case." 5 *McCarthy on Trademarks and Unfair Competition* § 30:101 (4th ed. 2009) (emphasis added).

Although the approaches taken by the lower courts with respect to the Lanham Act are not uniform,[4] the significant body of law adopting the objective unreasonableness provides additional support for construing the term "exceptional cases" to embody that standard.

---

[3] The Fourth and D.C. Circuits permit fee-shifting upon "a showing of 'something less than bad faith,'" including "'groundless argument[s],' and failure to cite controlling law." *Ale House Mgmt., Inc.* v. *Raleigh Ale House, Inc.*, 205 F.3d 137, 144 (4th Cir. 2000) (quoting *Noxell Corp.* v. *Firehouse No. 1 Bar-B-Que Rest.*, 771 F.2d 521, 526-527 (D.C. Cir. 1985)).

[4] See, *e.g.*, *Securacomm Consulting, Inc.* v. *Securacom Inc.*, 224 F.3d 273, 280 (3d Cir. 2000) (requiring proof of bad faith).

5. Decisions construing the "objectively unreasonable" standard under other fee-shifting statutes provide clear guidance for applying Section 285.

Construing Section 285 to incorporate the objectively unreasonable standard will enable courts to utilize the well-developed body of case law applying that standard in the context of other fee-shifting statutes—and thereby promote certainty and uniformity in decisions under Section 285.

A litigant's position is objectively unreasonable when it lacks a reasonable basis either in fact or in law. *Cf. Pierce*, 487 U.S. at 565 (a case is "substantially justified" if it has a "'reasonable basis both in law and fact'").

When a claim or defense lacks any legitimate ***factual*** support, it is objectively unreasonable.

In *Secalt*, for example, the Ninth Circuit affirmed an award of attorney's fees where "the plaintiffs were unable to provide the court with any evidence to support" the critical issue in the case—whether certain trade dress was non-functional. 668 F.3d at 687 (quotations omitted). If the plaintiff had offered "*some* legitimate evidence of nonfunctionality, this case would likely fall on the unexceptional side of the dividing line." *Id.* at 688 (emphasis added). But the plaintiffs' "'utter failure' of proof" meant that the case lacked a reasonable basis in fact, rendering it exceptional for purposes of fee-shifting. *Ibid.*

Similarly, a district court recently granted fees where the plaintiff had "no reasonable basis to believe" it would "succe[ed] at establishing any of the three elements" of its trade dress claims. *Scentsy, Inc.* v. *B.R. Chase, LLC*, 2013 WL 4525400, at *1-2

(D. Idaho 2013). Given a lack of "evidence," maintenance of claims was "groundless and unreasonable." *Id.* at *3. See also *Am. Optometric Soc'y, Inc.* v. *Am. Bd. of Optometry, Inc.*, 2012 WL 6012861, at *3 (C.D. Cal. 2012) (holding a case exceptional where a plaintiff had "failed to present evidence that would sustain its claim under the Lanham Act"); *Home Show Tours, Inc.* v. *Quad City Virtual, Inc.*, 840 F. Supp. 2d 1150, 1154 (S.D. Iowa 2012) (holding a case exceptional where there was "an obvious inability to provide any evidence of a violation of the Lanham Act").

That approach is easily transferable to Section 285. For example, if a plaintiff persists in advancing a patent infringement claim despite lacking any legitimate evidentiary basis for the claim, maintenance of that suit is objectively unreasonable. Likewise, if a defendant maintains a non-infringement defense notwithstanding a lack of legitimate supporting evidence, fees should be awarded to the prevailing plaintiff under Section 285.

A case is also objectively unreasonable when a litigant presses a claim or defense that lacks a reasonable basis in ***law***.

For example, in *Cairns* v. *Franklin Mint Co.*, 292 F.3d 1139, 1156 (9th Cir. 2002), the Ninth Circuit affirmed a fee award because the plaintiff's dilution of trademark theory "had no legal basis." Although the claim was "short of frivolous" (a finding of frivolousness would have independently justified a fee award under Rule 11), it nonetheless was "unreasonable." *Ibid.*

Another court awarded fees because of a counterclaim maintained by a defendant. *AirFX.com* v. *AirFX, LLC*, 2013 WL 857976 (D. Ariz. 2013). Al-

though the court declined to find that the counterclaim was pursued "in bad faith," the court nonetheless concluded that the counterclaim was "unreasonable" in light of law that was "squarely on point." *Id.* at *2. See also *Ale House Mgmt., Inc.* v. *Raleigh Ale House, Inc.*, 205 F.3d 137, 144 (4th Cir. 2000) (awarding fees, in part, because a plaintiff asserted a claim that was "inapplicab[le]").

In just the same way, maintenance of a legal position that is objectively unreasonable renders a case "exceptional" for purposes of Section 285. For example, if a plaintiff asserts a patent infringement suit, despite controlling law establishing that the asserted patent claims are invalid, a court should shift fees. Likewise, if a defendant asserts a defense that lacks a reasonable basis in law, fee-shifting is warranted.

* * *

In sum, the text of the Patent Act, the principle that a congressional enactment should not be construed in a manner that renders the provision meaningless, the legal background against which Congress legislated, this Court's interpretation of other fee-shifting statutes, and the lower courts' interpretations of the same language in other statutes all weigh heavily in favor of construing Section 285 to permit fee-shifting upon a showing that the losing party's litigation position was objectively unreasonable.

CONCLUSION

The judgment of the court of appeals should be reversed.

Respectfully submitted.

ANDREW J. PINCUS
Counsel of Record
PAUL W. HUGHES
JAMES F. TIERNEY
Mayer Brown LLP
1999 K Street, NW
Washington, DC 20006
(202) 263-3000
apincus@mayerbrown.com

Counsel for Amicus Curiae

DECEMBER 2013

AMICUS CURIAE BRIEF

RECORD
AND
BRIEFS

Supreme Court, U.S.
FILED
DEC - 9 2013
OFFICE OF THE CLERK

No. 12-1184

IN THE
Supreme Court of the United States

OCTANE FITNESS, LLC,

Petitioner,

v.

ICON HEALTH & FITNESS, INC.,

Respondent.

ON WRIT OF CERTIORARI TO THE
UNITED STATES COURT OF APPEALS FOR THE
FEDERAL CIRCUIT

BRIEF OF *AMICI CURIAE* COMPUTER & COMMUNICATIONS INDUSTRY ASSOCIATION; NEWEGG, INC.; PINTEREST; QUANTUM CORPORATION; AND RINGCENTRAL, INC. IN SUPPORT OF PETITIONER

MARK A. LEMLEY
Counsel of Record
CLEMENT S. ROBERTS
DURIE TANGRI LLP
217 Leidesdorff Street
San Francisco, CA 94111
(415) 362-6666
mlemley@durietangri.com
croberts@durietangri.com

Counsel for Amici Curiae

Library of Congress
Law Library

TABLE OF CONTENTS

Page

STATEMENT OF INTEREST 1

SUMMARY OF THE ARGUMENT 2

ARGUMENT 3

I. Meritless Suits Filed by Patent Trolls Are a Significant Problem for the Patent System 3

II. Fee-Shifting in Patent Cases Also Asymmetrically Favors Plaintiffs 8

A. The Current Standard Does Not Treat Plaintiffs and Defendants Equally 8

B. The Current Test Deprives District Courts of Discretion and Is at Odds With the Interpretation of the Lanham Act 12

C. The Current Test Renders Section 285 Superfluous 13

III. Restoring Symmetry to Fee Shifting Would Help Address the Problem of Baseless Assertions of Patent Trolls 14

CONCLUSION 15

TABLE OF CITED AUTHORITIES

Page(s)

Cases

Ashcroft v. Iqbal,
556 U.S. 662 (2009) 5

Aspex Eyewear, Inc. v. Clariti Eyewear, Inc.,
605 F.3d 1305 (Fed. Cir. 2010)..... 11

Bell Atlantic Corp. v. Twombly,
550 U.S. 544 (2007) 5

Brooks Furniture Mfg. v. Dutailier Int'l, Inc.,
393 F.3d 1378 (Fed. Cir. 2005)..... 9

Cambridge Prods., Ltd. v. Penn Nutrients, Inc.,
962 F.2d 1048 (Fed. Cir. 1992)..... 10, 11

Door Sys., Inc. v. Pro-Line Door Sys., Inc.,
126 F.3d 1028 (7th Cir. 1997) 12

Eltech Systems Corp. v. PPG Industries, Inc.,
903 F.2d 805 (Fed. Cir. 1990)..... 8, 9

Fogerty v. Fantasy, Inc.,
510 U.S. 517 (1994) 8

Hartman v. Hallmark Cards, Inc.,
833 F.2d 117 (8th Cir. 1987) 12

ICU Med., Inc. v. Alaris Med. Sys., Inc.,
558 F.3d 1368 (Fed. Cir. 2009)..... 13

TABLE OF CITED AUTHORITIES

Page(s)

In re Bill of Lading Transmission & Processing Sys. Patent Litig., 681 F.3d 1323 (Fed. Cir. 2012) 5

In re Seagate Tech., LLC, 497 F.3d 1360 (Fed. Cir. 2007) 10, 14

K-Tech Telecommunications, Inc. v. Time Warner Cable, Inc., 714 F.3d 1277 (Fed. Cir. 2013) 5

Parker v. Flook, 437 U.S. 584 (1978) 5

Ultramercial, Inc. v. Hulu, LLC, 722 F.3d 1335 (Fed. Cir. 2013) 5

Wedgetail, Ltd. v. Huddleston Deluxe, Inc., 576 F.3d 1302 (Fed. Cir. 2009) 10, 11

Statutes

15 U.S.C. § 1117 12

15 U.S.C. § 1117(a)(3) 12

35 U.S.C. § 101 5

35 U.S.C. § 282 5

35 U.S.C. § 285 ..... passim

Other Authorities

1974 U.S.C.C.A.N. 7132, 7135 (1974) 12

AIPLA, 2013 Report of the Economic Survey 35 6

TABLE OF CITED AUTHORITIES

Page(s)

Brian J. Love, *An Empirical Study of Patent Litigation Timing: Could a Patent Term Reduction Decimate Trolls Without Harming Innovators?*, 161 **U. Pa. L. Rev.** 1309, 1331-32 (2013) 4, 7

Colleen V. Chien, *Patent Assertion Entities,* Presentation to the Dec. 10, 2012 DOJ/FTC Hearing on PAEs (Dec. 10, 2012)..... 4

Colleen V. Chien, *Patent Trolls by the Numbers*, Santa Clara Univ. Legal Studies Research Paper No. 08-13 (March 13, 2013)..... 3

Fiona Scott Morton & Carl Shapiro, *Strategic Patent Acquisitions*, 80 **Antitrust L.J.** at tbl.2 (forthcoming 2014) 4

John R. Allison et al., *Patent Quality and Settlement Among Repeat Patent Litigants*, 99 **Geo. L.J.** 677, 693 tbl.8 (2011) 7

Mark A. Lemley & A. Douglas Melamed, *Missing the Forest for the Trolls*, 114 **Colum. L. Rev.** (forthcoming 2014) 3

Randall R. Rader et al., *Make Patent Trolls Pay in Court*, **N.Y. Times**, June 4, 2013 11

TABLE OF CITED AUTHORITIES

Page(s)

Robin Feldman, Tom Ewing & Sara Jeruss, *The AIA 500 Expanded: The Effects of Patent Monetization Entities*, 18 UCLA J.L. & Tech. (manuscript at 7) (forthcoming 2013) 3

S. Rep. No. 1503, 79th Cong., 2d Sess. (1946) *reprinted in* 1946 U.S.C.C.A.N. 1386, 1387 9

Rules

Fed. R. Civ. P. 11 ..... 13, 14

STATEMENT OF INTEREST

Amici are leading companies in software and information technology who manufacture and sell innovative products. They own many patents that result from their substantial investment in research and development, but are also regularly sued for patent infringement by non-practicing entities. Amici have no direct interest in and express no opinion on the merits of this particular case, but have a strong interest in seeing the law develop to more effectively deter frivolous patent lawsuits.[1]

---

[1] No one but amici and their counsel have written any portion of this brief or provided any monetary contribution towards this brief. Both parties have consented to the filing of amicus briefs in this case.

SUMMARY OF THE ARGUMENT

Three facts about modern patent litigation – the ease with which plaintiffs can file suit without real investigation, the high cost of discovery, and the difficulty of weeding out meritless suits early – have combined to give rise to a business model of nuisance-value patent litigation. A growing number of patent plaintiffs – perhaps even a majority of them – file suit not in hopes of enforcing their patent, but in hopes of coercing a cost-of-litigation settlement regardless of the merits of that patent.

Fee-shifting to prevailing defendants, expressly provided for in 35 U.S.C. § 285, offers one of the few defenses against this business model. But the Federal Circuit has in recent years made it all but impossible for prevailing defendants to win fee awards even if they prevail in cases that had little merit. The Federal Circuit's rule is at odds with the rule in copyright and trademark cases, removes the discretion of district courts to assess the facts, and renders section 285 superfluous. It should be replaced with an even-handed rule that allows district courts to grant fees to defendants who successfully defended objectively weak patent suits.

ARGUMENT

I. Meritless Suits Filed by Patent Trolls Are a Significant Problem for the Patent System

Patent trolls – plaintiffs in the business of filing patent lawsuits against productive companies rather than making anything themselves – are a growing problem for both the patent system and the court system as a whole.[2] Trolls filed nearly 60% of all patent lawsuits in 2012,[3] and some estimates have

---

[2] Amici recognize that not all non-practicing entities should be classified as patent trolls. And patent trolls are not the only problem facing the patent system. *See* Mark A. Lemley & A. Douglas Melamed, *Missing the Forest for the Trolls*, 114 **Colum. L. Rev.** (forthcoming 2014), *available* at http://papers.ssrn.com/sol3/papers.cfm?abstract_id=2269087. Generally speaking, amici are concerned with for-profit patent assertion entities who purchase patents for the purpose of filing lawsuits against as many targets as possible.

[3] Colleen V. Chien, *Patent Trolls by the Numbers*, Santa Clara Univ. Legal Studies Research Paper No. 08-13 (March 13, 2013), *available at* http://papers.ssrn.com/abstract=2233041 (finding that patent trolls brought 59% of patent assertions in 2012); Robin Feldman, Tom Ewing & Sara Jeruss, *The AIA 500 Expanded: The Effects of Patent Monetization Entities*, 18 **UCLA J.L. & Tech.** (manuscript at 7) (forthcoming 2013), *available at* http://ssrn.com/abstract=2247195 (finding that "patent monetization entities filed 58.7% of the patent lawsuits in 2012. This is a sharp rise from 2007, when patent monetization entities filed only 24.6% of patent infringement litigations.").

that number reaching 70% in 2013. Fiona Scott Morton & Carl Shapiro, *Strategic Patent Acquisitions*, 80 **Antitrust L.J.** at tbl.2 (forthcoming 2014), *available at* http://papers.ssrn.com/sol3/papers.cfm?abstract_id=2288911 (finding that as of June 4, 2013, patent trolls had filed 6,165 of the 8,854 claims against defendants so far this year, or 70%). Patent trolls are particularly likely to assert patents in the last years of their life, when the technology in question is obsolete. Brian J. Love, *An Empirical Study of Patent Litigation Timing: Could a Patent Term Reduction Decimate Trolls Without Harming Innovators?*, 161 **U. Pa. L. Rev.** 1309, 1331-32 (2013).

While some patent trolls seek a judgment in court that their patent is valid and infringed, most do not. More commonly, patent trolls do not intend to enforce their patents through judgment, but instead seek to extract a below-litigation-cost settlement from defendants. Colleen V. Chien, *Patent Assertion Entities*, Presentation to the Dec. 10, 2012 DOJ/FTC Hearing on PAEs (Dec. 10, 2012), *available at* http://ssrn.com/abstract=2187314 (presenting evidence suggesting that most patent trolls are seeking cost-of-litigation settlements). These plaintiffs take advantage of three facts about patent litigation that encourage the filing of baseless patent lawsuits.

First, it is extremely cheap to file a patent lawsuit. A patentee need not identify the specific claims it believes the defendant infringes. Indeed, the Federal Circuit recently held that a patentee

need not even identify the particular product it accuses of infringement. *K-Tech Telecommunications, Inc. v. Time Warner Cable, Inc.*, 714 F.3d 1277, 1286 (Fed. Cir. 2013). Mere ownership of a patent and a small filing fee is enough to initiate a patent lawsuit against virtually any defendant.

Second, it is difficult for courts to identify and weed out frivolous lawsuits early in the litigation process. Relying on Form 18 of the Federal Rules of Civil Procedure, the Federal Circuit has held that *Bell Atlantic Corp. v. Twombly*, 550 U.S. 544 (2007), and *Ashcroft v. Iqbal*, 556 U.S. 662 (2009), do not apply to patent litigation. *In re Bill of Lading Transmission & Processing Sys. Patent Litig.*, 681 F.3d 1323, 1333-34 (Fed. Cir. 2012). A patent is clothed in a presumption of validity, 35 U.S.C. § 282, and courts are reluctant to resolve either validity or infringement issues until they have construed the patent claims and allowed for the development of a factual record through discovery. And while this Court has identified patentable subject matter as a threshold inquiry that logically precedes a full inquiry on validity, *Parker v. Flook*, 437 U.S. 584, 593 (1978) (inquiry under Section 101 "must precede the determination of whether [a] discovery is, in fact, new or obvious"), the Federal Circuit has held that even that gatekeeper doctrine cannot normally be resolved on a motion to dismiss and should instead normally be considered after the development of the factual record and claim construction. *Ultramercial, Inc. v. Hulu, LLC*, 722 F.3d 1335, 1338-40 (Fed. Cir. 2013).

Third, the process of pretrial litigation and discovery in patent cases is inordinately expensive. The median cost in legal fees to defend even a moderately sized patent troll case is $4 million through trial. AIPLA, 2013 Report of the Economic Survey 35, *available at* http://www.aipla.org/learningcenter/library/books/econsurvey/2013EconomicSurvey/Pages/default.aspx. Even if the case ends after discovery, the cost is still $2.5 million. *Id.* That cost is not evenly distributed in patent troll cases. Much of the cost is driven by electronic discovery. A small plaintiff does not face substantial discovery obligations, but a large defendant must preserve, collect, review, and produce millions of electronic documents in even a routine patent suit – not to mention prepare for and defend the depositions of business persons and engineers who would otherwise be engaged in productive work for the company. And while a plaintiff that intended to go to trial might have to review all the evidence they obtained in discovery, plaintiffs interested only in a nuisance-value settlement often do not even review the documents produced to them, and they generally have few, if any, relevant witnesses. The primary value to these plaintiffs of discovery is in the cost it imposes on the defendant, not on the evidence it produces.

Patent trolls are well aware of this asymmetric cost; indeed, the cost-of-litigation-settlement business model depends on it. The combination of the ease of filing suit, the high cost of responding to that suit, and the inability of defendants to mount any meaningful challenge early in the case means

that even the owners of weak patents can credibly threaten to impose millions of dollars in costs on defendants. Because defendants understand this dynamic, they will often pay settlements of hundreds of thousands or even millions of dollars because it is less expensive and disruptive than paying their lawyers and pulling their business people and engineers away from the productive business of the company. The result is that, despite the fact that frequently-asserted, troll-owned patents almost always lose in court, John R. Allison et al., *Patent Quality and Settlement Among Repeat Patent Litigants*, 99 Geo. L.J. 677, 693 tbl.8 (2011) (finding that patent trolls won only 8% of the cases they litigated to judgment, while practicing entities won 40% of their cases); Love, *supra*, at 1346 tbl.9 (finding that patent trolls lost far more infringement cases than practicing entities), 90% of troll patent cases settle. Allison et al., *supra*, at 694 tbl.9.

The problem with this state of affairs is not so much a problem of fairness but one of incentives. By creating cost asymmetries in patent litigation, and allowing non-practicing entities to use those cost asymmetries to extract substantial revenue for even the weakest of patents, the current system has created strong incentives to file more patent lawsuits irrespective of quality. This adversely impacts the entire legal system. Judges are forced to contend with increasing case loads. Average times to resolution for *all* matters creep up. And the companies that we count on to drive economic growth and prosperity must spend increasing amounts of time and money on lawyers rather than

on engineers and expansion. Amici recognize that these negative effects are a matter of degree and that moving the pendulum too far in any one direction has negative economic consequences. But the numbers do not lie: non-practicing entity patent litigation is straining an already heavily burdened court system.

II. Fee-Shifting in Patent Cases Also Asymmetrically Favors Plaintiffs

A. The Current Standard Does Not Treat Plaintiffs and Defendants Equally

Under 35 U.S.C. § 285, "[t]he court in exceptional cases may award attorney fees to the prevailing party." As this Court held in the copyright context in *Fogerty v. Fantasy, Inc.*, 510 U.S. 517 (1994), plaintiffs and defendants are entitled to equal treatment in obtaining attorney fees because both can serve the public interest by prevailing in litigation. *Fogerty* observed "that the federal fee-shifting statutes *in the patent and trademark fields*, which are more closely related [than the Civil Rights Act] to that of copyright, support a party-neutral approach." *Fogerty*, 510 U.S. at 525 n.12 (emphasis added).

While that may have been true in 1994,[4] it no longer is. The Federal Circuit has departed from

---

[4] The frivolity standard adopted by the Federal Circuit today marks a significant departure from prior case law. In *Eltech Systems Corp. v. PPG Industries, Inc.*, 903 F.2d 805, 810-11 (Fed. Cir. 1990), the court

teachings of this Court and from its sister circuits' treatment of identical statutory language in trademark law. Current Federal Circuit precedent gives a district court discretion to award fees to prevailing defendants "only if *both* (1) the litigation is brought in subjective bad faith, *and* (2) the litigation is objectively baseless." *Brooks Furniture Mfg. v. Dutailier Int'l, Inc.*, 393 F.3d 1378, 1381 (Fed. Cir. 2005) (emphases added). Further, the Federal Circuit presumes that an assertion of infringement is made in good faith, *id.* at 1382.

---

noted that "there is and should be no difference in the standards applicable to patentees and infringers who engage in bad faith litigation . . . . The balance is not tipped in favor of either side when each is required to prove the other guilty of bad faith litigation by clear and convincing evidence in light of the totality of the circumstances." *See also* S. Rep. No. 1503, 79th Cong., 2d Sess. (1946) *reprinted in* 1946 U.S.C.C.A.N. 1386, 1387 (explaining of section 285 that "[t]he provision is also made general so as to enable the court to prevent a gross injustice to an alleged infringer.") (cited in *Eltech*, 903 F.2d at 811.). In *Eltech* the Federal Circuit articulated the standard in terms of bad faith but made it clear that bad faith itself was not a strictly defined criterion. "[T]he reasonableness of the patentee in assessing infringement [is] a proper consideration. Where . . . the patentee is manifestly unreasonable in assessing infringement, while continuing to assert infringement in court, an inference is proper of bad faith, whether grounded in or denominated wrongful intent, recklessness, or gross negligence." *Eltech*, 903 F.2d at 811.

Under the Federal Circuit's current regime, a prevailing plaintiff can obtain fees merely by proving that the defendant's infringement was willful, that is, by showing that the defendant was or should have been aware of an objectively high likelihood that the plaintiff would prevail. *In re Seagate Tech., LLC*, 497 F.3d 1360, 1371 (Fed. Cir. 2007) (en banc). Even if a defendant has a nonfrivolous noninfringement argument it actually believes in, its infringement will still be found willful, so long as the argument is one a reasonable person would have thought weak. Moreover, whenever there is a finding of willful infringement, the burden shifts to the district judge to explain why fees should *not* be awarded. *See Wedgetail, Ltd. v. Huddleston Deluxe, Inc.*, 576 F.3d 1302, 1305-06 (Fed. Cir. 2009) ("after an express finding of willful infringement, a trial court should provide reasons *for not increasing* a damages award or *for not finding a case exceptional*.") (emphases added). Given this presumption, it is not surprising that courts routinely award fees in cases in which defendants are found to be willful infringers.

For prevailing defendants, exceptionality is much more difficult to show. In *Wedgetail*, 576 F.3d at 1304-05, the Federal Circuit recited cases limiting the circumstances in which exceptionality could be found, noting that "[i]n the case of awards to prevailing accused infringers . . . 'exceptional cases' are normally those of bad faith litigation or those involving fraud or inequitable conduct by the patentee in procuring the patent." *Id.* (quoting *Cambridge Prods., Ltd. v. Penn Nutrients, Inc.*, 962 F.2d 1048, 1050-51 (Fed. Cir. 1992)). *Wedgetail* then

established the Federal Circuit's current standard for a prevailing defendant to obtain fees: "this court has rejected an expansive reading of § 285 . . . and (absent litigation misconduct or inequitable conduct before the PTO) has permitted the award of attorneys' fees to a prevailing accused infringer *only* if both (1) the litigation is brought in subjective bad faith, and (2) the litigation is objectively baseless." *Wedgetail*, 576 F.3d at 1305 (citations and internal quotation marks omitted). Thus there must be *no objective basis* for plaintiff's case, and the plaintiff must *actually* know it. Moreover, both prongs of this exacting standard "must be established by clear and convincing evidence." *Id.* at 1304 (quoting *Cambridge Prods.*, 962 F.2d at 1050); *see also Aspex Eyewear, Inc. v. Clariti Eyewear, Inc.*, 605 F.3d 1305, 1314 (Fed. Cir. 2010). Even in the rare case in which a defendant could make this showing, the court still has discretion not to award fees, and (unlike for plaintiffs) there is no presumption that it should.

This frivolity standard is almost impossible for accused infringers to meet. As a result, district courts applying this standard are unlikely to award fees even in cases involving obviously weak patent claims. The Chief Judge of the Federal Circuit noted that district courts shifted fees "in only 20 out of nearly 3,000 patent cases" in 2011, Randall R. Rader et al., *Make Patent Trolls Pay in Court*, N.Y. Times, June 4, 2013, *available at* http://www.nytimes.com/2013/06/05/opinion/make-patent-trolls-pay-in-court.html, and most of those involved allegations of inequitable conduct or litigation abuse. Section 285

as applied renders plaintiffs and defendants unequal before the law, and cannot be squared with this Court's analysis of the copyright statute.

B. The Current Test Deprives District Courts of Discretion and Is at Odds With the Interpretation of the Lanham Act

Requiring frivolity or bad faith sets up a bright-line threshold rule for exceptionality, demoting the exercise of judicial discretion to an afterthought. It is at odds with the purpose of section 285 and the way other circuits have treated the identical language of the trademark statute. The fee provision in the trademark statute is identical to the patent statute. *See* 15 U.S.C. § 1117 (providing in relevant part that "[t]he court in exceptional cases may award reasonable attorney fees to the prevailing party.") *id.* § 1117(a)(3); 35 U.S.C. § 285 (same). Indeed, the trademark statute was copied from the patent statute, and the legislative history of the trademark statute makes explicit reference to the fact that "[t]he federal patent and copyright statutes expressly provide for reasonable attorney fees . . . ." 1974 U.S.C.C.A.N. 7132, 7135 (1974). Because the trademark statute copied the patent statute, judicial understanding of the one is persuasive as regards the meaning of the other.

Courts of appeals in trademark cases have applied more flexible standard than this Court has applied to its patent counterpart. *See, e.g., Door Sys., Inc. v. Pro-Line Door Sys., Inc.*, 126 F.3d 1028, 1031 (7th Cir. 1997) ("[B]ad faith is not the correct

standard for determining whether to award attorneys' fees to the defendant in a Lanham Act case."); *Hartman v. Hallmark Cards, Inc.*, 833 F.2d 117, 123 (8th Cir. 1987) ("absence of bad faith is not alone determinative on the Lanham Act fee issue."). The current interpretation of section 285 is at odds with the interpretation of identical language in the Lanham Act in the regional circuits.

C. The Current Test Renders Section 285 Superfluous

The requirement of frivolity also makes Section 285 superfluous. Rule 11 of the Federal Rules of Civil Procedure already gives courts the power to sanction frivolous claims brought in bad faith. "Before awarding Rule 11 sanctions, 'a district court must conduct a two-prong inquiry to determine (1) whether the complaint [or relevant document] is legally or factually 'baseless' from an objective perspective, and (2) if the attorney has conducted 'a reasonable and competent inquiry' before signing and filing it.'" *ICU Med., Inc. v. Alaris Med. Sys., Inc.*, 558 F.3d 1368, 1381 (Fed. Cir. 2009) (citing *Christian v. Mattell, Inc.*, 286 F.3d 1118, 1127 (9th Cir. 2002) and quoting *Buster v. Greisen*, 104 F.3d 1186, 1190 (9th Cir. 1997)). Notably, Rule 11 appears more easily satisfied than the fees standard as interpreted by the Federal Circuit. Both require that the claim be objectively baseless; but Rule 11 merely requires the absence of a reasonable investigation. The fees statute, by contrast, has been interpreted by this Court to require subjective bad faith.

Rule 11 applies in all civil litigation. Section 285 is specific to patent law; it must mean something more than that courts are to apply the same standards they would have applied if section 285 didn't exist. This Court should not interpret section 285 in a way that renders it of no effect.

III. Restoring Symmetry to Fee Shifting Would Help Address the Problem of Baseless Assertions of Patent Trolls

District courts have been divested of their discretion to punish weak patent claims, rendering 35 U.S.C. § 285 useless to prevailing accused infringers unless the patentee committed inequitable conduct or engaged in frivolous litigation tantamount to a violation of Rule 11. District courts should have discretion to award fees to defendants when a patentee was objectively reckless – that is, filed or maintained a lawsuit with an objectively low likelihood of success knowing or having reason to know that it was likely to lose – or when the court finds that the defendant vindicated an important public interest. That standard would match the current standard for awarding fees to patentees under *Seagate*, eliminating the asymmetry in the Federal Circuit's interpretation of section 285.

Restoring symmetry to patent fee shifting would also target the problem of patent trolls who rely on the cost of litigation to obtain settlements using weak patents. That business model works because the patentees know that they can impose substantial attorneys' fees on defendants without incurring the

same costs themselves. If patentees who filed an objectively weak case and should have known of its weakness could be forced to pay for the damage they caused, they would have to do more pre-filing investigation and would be deterred from bringing weak patent cases. Shifting fees is not a complete solution to the problem of weak suits, but it is an important step towards solving that problem.

CONCLUSION

The Federal Circuit's restrictive test for the award of attorneys' fees to prevailing defendants should be replaced with a test consistent with the test in copyright and trademark cases.

Respectfully submitted,

MARK A. LEMLEY
Counsel of Record
CLEMENT S. ROBERTS
DURIE TANGRI LLP
217 Leidesdorff Street
San Francisco, CA 94111
(415) 362-6666
mlemley@durietangri.com
croberts@durietangri.com

Counsel for Amici Curiae

December 9, 2013

AMICUS CURIAE BRIEF

No. 12-1184

IN THE

SUPREME COURT OF THE UNITED STATES

OCTANE FITNESS, LLC,

Petitioner,

v.

ICON HEALTH & FITNESS, INC,

Respondent.

ON WRIT OF CERTIORARI TO THE
COURT OF APPEALS FOR THE FEDERAL CIRCUIT

BRIEF OF *AMICI CURIAE* ELECTRONIC FRONTIER FOUNDATION, APPLICATION DEVELOPERS ALLIANCE, ENGINE ADVOCACY, AND PUBLIC KNOWLEDGE IN SUPPORT OF PETITIONER

JULIE P. SAMUELS
Counsel of Record
DANIEL NAZER
ELECTRONIC FRONTIER FOUNDATION
815 Eddy Street
San Francisco, California 94109
(415) 436-9333
julie@eff.org

Attorneys for Amici Curiae

TABLE OF CONTENTS

INTEREST of *AMICI CURIAE* 1

SUMMARY OF ARGUMENT 3

ARGUMENT 5

I. By Misrepresenting the Exceptional Case Statute, the Federal Circuit has Fostered an Industry of Abusive Patent Litigation that Threatens Small Businesses, Startups and American Innovation. 5

A. The Federal Circuit's Overly Rigid Standard is Nearly Impossible to Meet, thus Rendering Section 285 Meaningless. 6

B. The Direct Consequences of a Virtually Unreachable Exceptional Case Standard is the Rise of Abusive Litigation Seeking to Extract Undue Settlements. 8

C. Small Businesses and Startups, Without any Real Protection from Section 285, Bear the Brunt of Harm from Abusive Patent Litigation. 13

D. The Correct Standard Would Permit Fee Shifting Whenever A Plaintiff Brings an Objectively Weak Case or Uses the Cost of Defense as a Weapon. 17

II. This Court's Analysis of Section 285 Must Proceed Independent of Congressional Reform. 17

CONCLUSION..... 19

TABLE OF AUTHORITIES

FEDERAL CASES

Aspex Eyewear Inc. v. Clariti Eyewear, Inc.,
605 F.3d 1305 (Fed. Cir. 2010) 6

Brooks Furniture Mfg., Inc. v. Dutailier Int'l, Inc.,
393 F.3d 1378 (Fed. Cir. 2005) 6, 8, 17

Hall v. Cole,
412 U.S. 1 (1973) 8

Multiform Desiccants, Inc. v. Medzam, Ltd.,
133 F.3d 1473 (Fed. Cir. 1998) 17

Noxell Corp. v. Firehouse No. 1 Bar-B-Que Rest.,
771 F.2d 521 (D.C. Cir. 1985) 6

Premier Elec. Const. Co. v.
Nat'l Elec. Contractors Ass'n, Inc.,
814 F.2d 358 (7th Cir. 1987) 7

Prof'l Real Estate Investors v.
Columbia Pictures Industries,
508 U.S. 49 (1993) 6, 7

Smith v. Ricks,
31 F.3d 1478 (9th Cir. 1994) 7

Storey v. Cello Holdings, LLC,
347 F.3d 370 (2d Cir. 2003) 7

STATUTES

35 U.S.C. § 285 ..... *passim*

OTHER AUTHORITIES

Brian T. Yeh, Cong. Research Serv., R42668, *An Overview of the "Patent Trolls" Debate* (2012) 16

Chris Barry, *et al.*, PricewaterhouseCoopers, *2012 Patent Litigation Survey* (2012) 10

Chris Barry, *et al.*, PricewaterhouseCoopers, *2013 Patent Litigation Survey* (2013) 10, 12

Colleen Chien & Edward Reines, *Why Technology Customers Are Being Sued En Masse for Patent Infringement & What Can Be Done,* Santa Clara Law Digital Commons (Aug. 30, 2013) 17

Colleen Chien, *Patent Assertion and Startup Innovation*, New America Foundation (Sept. 2013) 14, 15, 16

Colleen Chien, *Startups and Patent Trolls*, Santa Clara Univ. School of Law, Legal Studies Research Paper Series, Accepted Paper No. 09-12, (2012) 15

Colleen V. Chien, *Patent Assertion Entities*, presentation to the December 10, 2012 DOJ/FTC Hearing on PAEs 11

Colleen V. Chien, *Reforming Software Patents*, 50 Hous. L. Rev. 325 (2012) 7

Congress Takes on Abusive Patent Suits, N.Y. Times (Nov. 30, 2013) 3

Curt Bramble, *Patent Trolls Spell Trouble for America's Economy*, Reuters (Nov. 18, 2013) 3

David L. Schwartz, *The Rise of Contingent Fee Representation in Patent Litigation*, 64 Ala. L. Rev. 335 (2012) 8

Fabio Marino & Teri Nguyen, *Are Patent Trolls Now Zeroed In On Start-Ups?*, Forbes (Jan. 17, 2013) 12, 13

Henry Cohen, *CRS Report for Congress: Awards of Attorneys' Fees by Federal Courts and Federal Agencies* (Congressional Research Service 2008) 8

James Bessen & Michael Meurer, *The Direct Costs from NPE Disputes* Boston Univ. School of Law, Law and Economics Research Paper No. 12-34 (2012) 16

James Bessen, Jennifer Ford and Michael Meurer, *The Private and Social Costs of Patent Trolls*, Boston Univ. School of Law, Working Paper No. 11-45 (2011) 10, 16

Joe Mullin, *Patent Trolls Want $1,000—For Using Scanners*, Ars Technica (Jan. 2, 2013) 15

John R. Allison et al., *Patent Quality and Settlement Among Repeat Patent Litigants*, 99 Geo. L.J. 677 (2011) 12, 17

Letter from Aeton Law Partners to Danny Seigle, Director of Operations of FindTheBest (May 30, 2013) 9

Morris Panner, *Absent Patent Troll Reform, Silicon Valley's Innovation Leadership Could End*, Forbes (Nov. 11, 2013) 3

Professors' Letter in Support of Patent Reform Legislation (Nov. 25, 2013) 18

Randall R. Rader, Colleen V. Chien, David Hricik, *Make Patent Trolls Pay in Court*, The New York Times (June 7, 2013) 13

Richard A. Posner, *Why There Are Too Many Patents in America*, The Atlantic (July 12, 2012) 5

Robert P. Merges, *The Trouble With Trolls: Innovation, Rent-Seeking, and Patent Law Reform*, 24 Berkeley Tech. L.J. 1583 (2009) 9

Rudolph Telscher, *Patent Litigation: The Sport of Kings* (2012) 12

Sam Gustin, *Congress Is Poised to Send Patent Trolls Back to Their Caves*, Time (Dec. 3, 2013) 3

Sara Jeruss, Robin Feldman & Joshua Walker, *The America Invents Act 500: Effects of Patent Monetization Entities on US Litigation*, 11 Duke L. & Tech. L. Rev 357 (2012) 11

INTEREST OF *AMICI CURIAE*[1]

The Electronic Frontier Foundation ("EFF") is a non-profit civil liberties organization that has worked for more than 20 years to protect consumer interests, innovation, and free expression in the digital world. EFF and its 24,000 active members have a strong interest in helping the courts and policymakers to strike the appropriate balance between intellectual property and the public interest. As part of its mission, EFF has often served as *amicus* in key patent cases, including *Microsoft Corp. v. i4i Ltd. P'ship, et al.*, 131 S. Ct. 2238 (2011); *Bilski v. Kappos*, 130 S. Ct. 3218 (2010); *Quanta Computer, Inc. v. LG Elecs. Corp.*, 553 U.S. 617 (2008); *KSR Int'l Co. v. Teleflex Inc.*, 550 U.S. 398 (2007); and *eBay Inc. v. MercExchange, L.L.C.*, 547 U.S. 388 (2005).

Engine Advocacy is a non-profit organization that supports the growth of technology entrepreneurship through economic research, policy analysis, and advocacy on local and national issues. As part of its advocacy efforts, Engine has built a coalition of more than 500 high-growth businesses and associa-

---

[1] No counsel for a party authored this brief in whole or in part, and no such counsel or party made a monetary contribution intended to fund the preparation or submission of this brief. No person other than the *amici curiae*, or their counsel, made a monetary contribution intended to fund its preparation or submission. Letters of the Parties' general consent to the filing of amicus briefs are on file with the Court. Web sites cited in this brief were last visited on December 4, 2013.

tions, pioneers, innovators, investors, and technologists from all over the country, committed to taking action on the policy issues that affect the way they run their businesses. With the burden of litigation by patent assertion entities resting unfairly on the smallest—and most productive—businesses in the economy, Engine Advocacy, as the voice of startups in government, has a vested interest in leveling this litigation playing field.

The Application Developers Alliance ("Alliance") is a global association of more than 30,000 individuals and more than 140 companies who design and build apps, especially for use on mobile devices like smartphones and tablets. Apps run on software platforms, including Google's Android, Apple's iOS, and Facebook, and are sold or distributed through virtual stores like Apple's App Store, Google's Play Store, Amazon.com, and Handango. The Alliance was formed to promote continued growth and innovation in the rapidly growing app industry, and routinely speaks as the industry's voice to legislators and policy-makers.

Public Knowledge is a non-profit organization that is dedicated to preserving the openness of the Internet and the public's access to knowledge; promoting creativity through balanced intellectual property rights; and upholding and protecting the rights of consumers to use innovative technology lawfully. As part of this mission, Public Knowledge advocates on behalf of the public interest for a balanced patent system, particularly with respect to new and emerging technologies. Public Knowledge has served as *amici* in key patent cases, such as *Microsoft Corp. v. i4i Ltd. P'ship*, 131 S. Ct. 2238 (2011); *Bilski v. Kappos*, 130 S. Ct. 3218 (2010); *Quanta Computer, Inc. v. LG Elecs. Corp.*, 553 U.S.

617 (2008).

SUMMARY OF ARGUMENT

There has lately been much talk of patent litigation abuse. *See Congress Takes on Abusive Patent Suits*, N.Y. Times (Nov. 30, 2013);[2] Sam Gustin, *Congress Is Poised to Send Patent Trolls Back to Their Caves*, Time (Dec. 3, 2013);[3] Curt Bramble, *Patent Trolls Spell Trouble for America's Economy*, Reuters (Nov. 18, 2013);[4] Morris Panner, *Absent Patent Troll Reform, Silicon Valley's Innovation Leadership Could End*, Forbes (Nov. 11, 2013).[5] And it should be unsurprising that patent litigation abuse has garnered the attention of both the media and Congress: instances of such abuse have been increasingly—and dangerously—common. And not without treacherous effects. The financial harm that comes from the so-called patent troll problem is billions of dollars annually, and the problem is blamed for small businesses shutting their doors, for investors

---

[2] Available at http://www.nytimes.com/2013/12/01/opinion/sunday/congress-takes-on-abusive-patent suits.html.

[3] Available at http://business.time.com/2013/12/03/congress-is-poised-to-send-patent-trolls-back-to-their-caves/?iid=biz-main-lead

[4] Available at http://blogs.reuters.com/great-debate/2013/11/18/patent-trolls-spell-trouble-for-americas-economy/

[5] Available at http://www.forbes.com/sites/realspin/2013/11/18/absent-patent-troll-reform-silicon-valleys-innovation-leadership-could-end/.

pulling out of deals, and—perhaps most dangerously—for an untold number of inventions that will never see the light of day.

Commentators have rightfully laid blame for the rise in abusive patent litigation on many issues, such as dubious patent quality and the lack of transparency surrounding patent ownership. But *amici* find a significant concern drives much of the problem, particularly as it relates to the small businesses and startups it represents. That concern is the issue of this case: an inability to hold abusers accountable, due to an inappropriately high bar for attorney fee shifting, created by an overzealous Federal Circuit misinterpreting Section 285 of the Patent Act.

Read correctly, that section deters abusive and frivolous litigation by protecting defendants through the recovery of attorneys' fees and costs. But the Federal Circuit's erroneous interpretation fails to provide any substantial promise—or even hope—of recovering those fees and costs in even the most egregious infringement cases.

The consequence of the Federal Circuit's withering of Section 285 protection is the creation of an industry of patent abusers, decimating the very small businesses and startups that drive American innovation. The intimidating cost of patent litigation is often sufficient to defeat those small parties before they even enter the courthouse. These costs are not just legal fees – they are also the stress associated with litigation; employee time lost in deposition, discovery, and trial; and the stifling of productive output during the pendency of litigation. Thus, facing the threat of a lawsuit, a potential defendant finds itself with virtually no choice but to settle, even if it believes it has a meritorious noninfringement or invalidity case. And the proverbial analogy continues

full-circle: feeding a troll just emboldens that troll to act again, while blighting the innovators upon whom the trolls feed.

Respectfully, *amici* urge this Court to correct the Federal Circuit's misreading of the statute, and restore Section 285 to its intended purpose of deterring those improper and abusive cases that tarnish our American innovation economy.

ARGUMENT

I. BY MISREPRESENTING THE EXCEPTIONAL CASE STATUTE, THE FEDERAL CIRCUIT HAS FOSTERED AN INDUSTRY OF ABUSIVE PATENT LITIGATION THAT THREATENS SMALL BUSINESSES, STARTUPS AND AMERICAN INNOVATION.

Petitioner argued, and a likely number of other *amici* will discuss, the recent increase in litigation brought by patent assertion entities (PAEs), also known as non-practicing entities, patent monetizers, or, more colloquially, patent trolls. As Judge Posner of the Seventh Circuit put it, PAEs "are companies that acquire patents not to protect their market for a product they want to produce—patent trolls are not producers—but to lay traps for producers, for a patentee can sue for infringement even if it doesn't make the product that it holds a patent on." Richard A. Posner, *Why There Are Too Many Patents in America*, The Atlantic (July 12, 2012).[6] We write to offer a distinct and important perspective—that of

---

[6] Available at http://www.theatlantic.com/business/archive/2012/07/why-there-are-too-many-patents-in america/259725/.

small businesses and startups hit especially hard by PAE litigation trends.

A. The Federal Circuit's Overly Rigid Standard is Nearly Impossible to Meet, thus Rendering Section 285 Meaningless.

Section 285 provides that the district court may award attorneys' fees in "exceptional cases." 35 U.S.C. § 285. The Federal Circuit has imposed a rigid standard for accused infringers seeking fees under this section: "Absent misconduct in conduct of the litigation or in securing the patent, sanctions may be imposed against the patentee *only if* both (1) the litigation is brought in *subjective bad faith*, and (2) the litigation is *objectively baseless*." *Brooks Furniture Mfg., Inc. v. Dutailier Int'l, Inc.*, 393 F.3d 1378, 1381 (Fed. Cir. 2005) (emphasis added). As Petitioner argued, this standard is inconsistent with both congressional intent and with well-settled interpretations of the identical provision in the Lanham Act. *See, e.g., Noxell Corp. v. Firehouse No. 1 Bar-B-Que Rest.*, 771 F.2d 521, 526 (D.C. Cir. 1985) ("Something less than 'bad faith,' we believe, suffices to mark a case as 'exceptional.'); Brief for Petitioner at 22-38, *Octane Fitness, LLC v. Icon Health & Fitness, Inc.*, Case No.12-1184 (2013) [hereinafter Pet'r Br.].

The Federal Circuit's mistake can be traced to its reliance on *Prof'l Real Estate Investors v. Columbia Pictures Industries*, 508 U.S. 49 (1993) [hereinafter *PRE*]; *see also* Pet'r Br. at 23-25. In *Brooks*, the appeals court directly imported its test for "exceptional case" from *PRE*. *See* 393 F.3d at 1381; *see also Aspex Eyewear Inc. v. Clariti Eyewear, Inc.*, 605 F.3d 1305, 1314 (Fed. Cir. 2010). But the Federal Circuit's

reliance on *PRE* was entirely inappropriate. In *PRE*, this Court considered when the First Amendment provides litigation activity immunity from antitrust liability. *See* 508 U.S. at 56. However, Section 285 of the Patent Act does not raise these First Amendment concerns, so it need not be construed so narrowly. *See Premier Elec. Const. Co. v. Nat'l Elec. Contractors Ass'n, Inc.*, 814 F.2d 358, 373 (7th Cir. 1987) (firmly rejecting the argument that the *Noerr-Pennington* doctrine places limits on fee-shifting).

By wrongfully equating the Patent Act's "exceptional case" standard with *PRE*'s strict First Amendment test, the Federal Circuit has made Section 285 almost irrelevant. Indeed, the appeals court construes Section 285 so narrowly that it provides *less* protection to accused infringers than Federal Rule of Civil Procedure 11. *See Storey v. Cello Holdings, LLC*, 347 F.3d 370, 387 (2d Cir. 2003) (the Rule 11 standard "is objective unreasonableness, and is not based on the subjective beliefs of the person") (citation omitted); *Smith v. Ricks*, 31 F.3d 1478, 1488 (9th Cir. 1994) (counsel cannot "avoid the sting of Rule 11 sanctions by operating under the guise of a pure heart and empty head") (citation omitted). Unsurprisingly then, Section 285 has fallen into almost complete disuse. From 2005-2012, attorneys' fees were awarded in less than two percent of patent cases. *See* Colleen V. Chien, *Reforming Software Patents*, 50 Hous. L. Rev. 325, 377 (2012).

In addition to rendering Section 285 irrelevant, the Federal Circuit's interpretation also makes it superfluous. Even aside from Rule 11, the common law already allows courts to award fees based on a finding of bad faith. Henry Cohen, *CRS Report for Congress: Awards of Attorneys' Fees by Federal Courts and Federal Agencies* (Congressional Re-

search Service 2008)[7] at CRS-4, (citing *Hall v. Cole*, 412 U.S. 1, 5 (1973) ("[I]t is unquestioned that a federal court may award counsel fees to a successful party when his opponent has acted 'in bad faith, vexatiously, wantonly, or for oppressive reasons . . . .'") (internal citations omitted)). Thus, Section 285 as currently interpreted provides no value over what the common law already contemplates. This could not possibly be what Congress intended when it enacted Section 285.

B. The Direct Consequences of a Virtually Unreachable Exceptional Case Standard is the Rise of Abusive Litigation Seeking to Extract Undue Settlements.

In its opening brief, Petitioner points out that the rigid test imposed by *Brooks* is particularly harmful now, when "litigation abuse by some patentees is a grave and growing national problem." (Pet'r Br. at 16.) Petitioner underestimates the relationship between the *Brooks* test and the growth of this problem. In fact, *Brooks'* rigid standard has directly led to the dangerous rise in litigation abuse.

By simply raising a credible threat of extended litigation, a PAE can pressure a defendant to settle regardless of the merits of the underlying infringement allegations. *See* David L. Schwartz, *The Rise of Contingent Fee Representation in Patent Litigation*, 64 Ala. L. Rev. 335, 370 (2012) ("It is not uncommon for settlement demands to be in the range of $100,000 or $250,000, even though the cost of litigat-

---

[7] Available at http://www.fas.org/sgp/crs/misc/94-970.pdf.

ing the case for an accused infringer would be close to one million dollars per year. Sometimes the demands are as low as $5,000 or $10,000."). PAEs often emphasize the cost of litigation, rather than the value of the patent, when making settlement demands. *See, e.g.*, Letter from Aeton Law Partners to Danny Seigle, Director of Operations of FindTheBest (May 30, 2013)[8] (letter from PAE threatening "protracted discovery"). The PAE business model has thereby created a "questionable market for the settlement of lawsuits involving weak, outdated or irrelevant patents." Robert P. Merges, *The Trouble With Trolls: Innovation, Rent-Seeking, and Patent Law Reform*, 24 Berkeley Tech. L.J. 1583, 1583 (2009).

This "questionable market" is driven by what has become a largely irrelevant Section 285. A potential defendant who faces a lawsuit with no hope of remuneration and the prospect of mounting legal bills or an escape route for a fraction of those bills will almost always chose the escape route even where that payment is not justified. In the present case, Octane had the will and the resources to fight back, but we have no way of knowing how many companies made the other choice. Ensuring that Section 285 empowers defendants will incentivize more companies like Octane to take on these suits, invalidating patents of questionable quality and chilling the dangerous increase of often-meritless litigation and the rise in the "questionable market" of settlements.

It is not just the "questionable market" of settlements that has grown in the face of a weak Sec-

---

[8] Available at https://trollingeffects.org/demand/lumen-view-technology-2013-05-30.

tion 285. It is also the amount of patent litigation itself, which has dramatically increased in recent years. Chris Barry, *et al.*, PricewaterhouseCoopers, *2012 Patent Litigation Survey* 6 (2012) [hereinafter PWC 2012].[9] There were 4,015 patent actions filed in 2011, compared to fewer than 3,000 such actions filed in in 2009. *Id.* That number reached 5,189 in 2012. Chris Barry, *et al.*, PricewaterhouseCoopers, *2013 Patent Litigation Survey* 6 (2013) [hereinafter PWC 2013].[10]

While all patent litigation has increased, litigation by patent assertion entities has exploded. PAEs accounted for only about five percent of patent litigation in 2000-2002. James Bessen, Jennifer Ford and Michael Meurer, *The Private and Social Costs of Patent Trolls*, Boston Univ. School of Law, Working Paper No. 11-45 (2011) [hereinafter Bessen 2011], at 6-7.[11] This figure increased to about 22 percent in 2007, and then to almost 40 percent in 2011. Sara Jeruss, Robin Feldman & Joshua Walker, *The Amer-*

---

[9] Available at http://www.pwc.com/us/en/forensic-services/publications/2012-patent-litigation-study.jhtml.

[10] Available at http://www.pwc.com/en_US/us/forensic-services/publications/assets/2013-patent-litigation-study.pdf. The 2011-2012 figures are likely impacted by the new joiner rules of the America Invents Acts of 2011 (which made it harder for PAEs to sue multiple defendants in a singe suit). But even accounting for that change, there has been a drastic and sustained increase in PAE litigation since 2004.

[11] Available at http://papers.ssrn.com/sol3/papers.cfm?abstract_id=1930272.

ica Invents Act 500: Effects of Patent Monetization Entities on US Litigation, 11 Duke L. & Tech. Rev. 357, 361, 381 (2012).[12] In 2012, *61 percent* of new patent actions were brought by PAEs. Colleen V. Chien, *Patent Assertion Entities*, presentation to the December 10, 2012 DOJ/FTC Hearing on PAEs, slides 23-24.[13]

The explosive growth in PAE litigation is driven by weak, opportunistic lawsuits. This phenomenon emerges out of the PAE business model itself. For operating companies, patent litigation is very risky because it can provoke countersuits and cause reputational harm in the marketplace. In contrast, PAEs cannot be countersued or impugned since they do not make anything. This means that it can be economical for a PAE to bring suit, and rational for the defendant to settle, regardless of the merits. The lack of any hope of remuneration at the conclusion of a suit—no matter how absurd the lawsuit may be—further incentivizes defendants to take a settlement instead of raising meritorious defenses.

This is reflected in the results of PAE litigation. When rare cases are litigated to judgment, PAEs lose far more often than they win. Indeed, from 1995 to 2012, PAEs lost more than 75 percent of cas-

---

[12] Available at http://papers.ssrn.com/sol3/papers.cfm?abstract_id=2158455.

[13] Available at https://papers.ssrn.com/sol3/papers.cfm?abstract_id=2187314. A recent study by the General Accounting Office suggests that the percentage of new patent actions filed by PAEs is lower. The discrepancy would appear to be due to a different definition of PAE (a much narrower definition in the GAO's case).

es decided on the merits. *See* PWC 2013 at 5. And the PAE suits typically faced by startups and app developers represented by *amici*—cases where PAEs assert software-related patents—tend to be the worst of all. From 1995-2012, PAEs alleging infringement of software patents lost approximately *85 percent* of cases decided on the merits. *Id.* at 18. Other studies have confirmed that the most aggressive PAEs bring the weakest cases. Non-practicing entities that assert the same patent in more than eight cases lose more than 90 percent of the time. *See* John R. Allison et al., *Patent Quality and Settlement Among Repeat Patent Litigants*, 99 Geo. L.J. 677, 681 (2011).

With such a poor record of success on the merits, why is the PAE business model flourishing? The answer is that PAEs don't need to bring objectively meritorious suits to make money. Instead, they use the cost of litigation as a weapon to extract settlements. Defending a patent case is extraordinarily expensive. Indeed, while all federal litigation is costly, patent litigation is in a league of its own; some have referred to patent litigation as "the sport of kings".[14] Defending a patent suit can easily cost over $2 million. *See* Fabio Marino & Teri Nguyen, *Are Patent Trolls Now Zeroed In On Start-Ups?*, Forbes (Jan. 17, 2013)[15] (citing survey data compiled by the American Intellectual Property Law Association).

---

[14] Rudolph Telscher, *Patent Litigation: The Sport of Kings* (2012), available for purchase at http://www.amazon.com/Patent-Litigation-The-Sport-Kings-ebook/dp/B00AR5I0GY.

[15] Available at http://www.forbes.com/sites/ciocentral/2013/01/17/are-patent-trolls-now-zeroed-in-on-start-ups/.

For small patent cases—defined as suits with less than $1 million at stake—the cost of defense still averages over $600,000. *Id.* While defendants face massive costs, PAEs can litigate far more cheaply. As Chief Judge Randall Rader of the Federal Circuit explained, t. problem stems largely from the fact that, in our judicial system, patent trolls have an important strategic advantage over their adversaries: they don't make anything. So in a patent lawsuit, they have far fewer documents to produce, fewer witnesses and a much smaller legal bill than a company that does make and sell something." Randall R. Rader, Colleen V. Chien, David Hricik, *Make Patent Trolls Pay in Court*, N.Y. Times (June 7, 2013).[16] A properly implemented Section 285 would help put the parties back on even footing by giving defendants leverage to take on the meritorious legal fights.

C. Small Businesses and Startups, Without any Real Protection from Section 285, Bear the Brunt of Harm from Abusive Patent Litigation.

This litigation explosion particularly burdens small companies, which are often the targets of these suits. A recent study has found that nearly 75 percent of venture capitalists have had their portfolios impacted by litigation from a patent troll. Colleen Chien, New Am. Found., *Patent Assertion and*

---

[16] Available at http://www.nytimes.com/2013/06/05/o ble at http://www.nytimes.com/2013/06/05/opinion/m ake-patent-trolls-pay-in-court.html.

Startup Innovation 10 (Sept. 2013).[17] More than half of the defendants involved in litigation brought by patent PAEs are companies with annual revenues of $10 million or less. *Id.* at 11. Professor Chien noted:

> Although large companies tend to dominate patent headlines, most unique defendants to PAE suits are small. Companies with less than $100M annual revenue represent at least 66% of unique defendants and the majority of them make much less than that: at least 55% of unique defendants in PAE suits make under $10M per year. Suing small companies appears [to] distinguish PAEs from operating companies, who sued companies with less than $10M of annual revenue only 16% of the time, based on unique defendants.

Id. at 1-2.

For a large company, being hit by a weak patent lawsuit is an expensive inconvenience.[18] But for

---

[17] Available at http://www.newamerica.net/publications/policy/patent_assertion_and_startup_innovation.

[18] Even for large companies, these expenses can quickly add up. In just the last five years, some companies have been hit with over 100 patent lawsuits brought by PAEs. *See* Patent Freedom, *Most Pursued Companies*, available at https://www.patentfreedom.com/about-npes/pursued/ (listing 10 companies sued over 100 times each since 2009). Although big companies can usually absorb the cost

a small company, a single patent suit can be devastating. With defense costs running into the millions, most of these targets are unable to mount an adequate defense. Also, in a small company, key management and engineers must deal with a PAE claim. *See* Colleen Chien, *Startups and Patent Trolls*, 10-13 Santa Clara Univ. School of Law, Legal Studies Research Paper Series, Accepted Paper No. 09-12, (2012). Litigation-based legal expenses can kill small startups entirely, and the mere threat of those expenses can chill innovation.

In another troubling trend, small companies increasingly find themselves targeted by PAEs based on their use of basic technologies, such as using a scanner or wireless Internet. Joe Mullin, *Patent Trolls Want $1,000—For Using Scanners*, Ars Technica (Jan. 2, 2013) (stating "2012 may go down as the year of the user").[19] One analysis has found that the top ten patent litigation campaigns over the past three years (as determined by number of named defendants) all involved users and implementers, rather than manufacturers or sellers, of a technology. Chien, *Patent Assertion and Startup Innovation*, *supra*, at 12. Small companies are particularly vulnerable to such lawsuits as they are unlikely to have been able to negotiate indemnity protection. *Id.* at 13. Oftentimes these companies are not technology companies and have little to no experience in navigating the patent system; they are caught unaware

---

of settling and defending these cases, the cumulative cost is staggering.

[19] Available at http://arstechnica.com/tech-policy/2013/01/patent-trolls-want-1000-for-using-scanners.

for using basic, off-the-shelf technology. "Indeed, many businesses have stopped adopting technology altogether to avoid patent infringement claims—for example, scanning to a USB stick to avoid infringing a PDF machine patent, not offering Wi-Fi to customers to avoid Wi-Fi patents, or, in some cases exiting the business or business line." *Id.* at 12.

This explosion of litigation has been costly. According to a congressional study, PAE activity cost defendants and licensees $29 billion in 2011, a 400 percent increase over $7 billion in 2005, and the losses are mostly deadweight, with less than 25 percent flowing to innovation and at least that much going towards legal fees. Brian T. Yeh, Cong. Research Serv., R42668, *An Overview of the "Patent Trolls" Debate*, at Summary and 2 (2012) [hereinafter Yeh][20] (citing James Bessen & Michael Meurer, *The Direct Costs from NPE Disputes* 2, 18-19, (Boston Univ. School of Law, Law and Economics Research Paper No. 12-34 (2012) [hereinafter Bessen 2012]).[21] This research shows that that PAE lawsuits "are associated with half a trillion dollars of lost wealth to defendants from 1990 through 2010. During the last four years the lost wealth has averaged over $80 billion per year." Bessen 2011, *supra*, at 2. And it's not just the economy that feels the pinch, it's the U.S. Patent system as a whole. Colleen Chien & Edward Reines, *Why Technology Customers Are Being Sued En Masse for Patent Infringement & What Can Be Done*, Santa Clara Law Digital Commons, at 4

---

[20] Available at https://www.eff.org/sites/default/files/R42668_0.pdf.

[21] Available at http://papers.ssrn.com/sol3/papers.cfm?abstract_id=2091210.

(Aug. 30, 2013).[22]

D. The Correct Standard Would Permit Fee Shifting Whenever A Plaintiff Brings an Objectively Weak Case or Uses the Cost of Defense as a Weapon.

Once stripped of the Federal Circuit's unnecessarily rigid and stringent conditions, Section 285 will be a useful tool for courts to reduce abusive patent litigation. Before its error in *Brooks*, the Federal Circuit applied a more flexible test that considered the totality of circumstances. *See, e.g.*, *Multiform Desiccants, Inc. v. Medzam, Ltd.*, 133 F.3d 1473, 1481–82 (Fed. Cir. 1998). If district courts are given the flexibility to consider all the circumstances when applying Section 285, they will be able to shift fees to deter PAEs that bring weak cases and leverage the cost of litigation to extract settlements. As noted above, the most active PAEs tend to bring the weakest cases. *See* Allison, *supra*, at 681 (finding that the most aggressive PAEs lose over 90% of their cases). So a more flexible test, even when applied relatively sparingly, could still have a large impact.

II. This Court's Analysis of Section 285 Must Proceed Independent of Congressional Reform.

In its opposition to the Petition for Certiorari, the Respondent argued that Petitioner is seeking relief that should come from Congress. Not so. Re-

---

[22] Available at http://digitalcommons.law.scu.edu/cgi/viewcontent.cgi?article=1799&context=facpubs.

spondent is confusing two issues: so-called fee shifting provisions that are currently pending before Congress and the law that Congress has already passed. The issue in this case is the latter, on which Congress has already spoken when it enacted Section 285.

To be sure, the recent push for legislative reforms—in general, and fee-shifting more specifically—highlights a perception among stakeholders that the current state of the law fails to address the growing "patent troll" problem. For instance, 60 law professors recently wrote:

> In short, high litigation costs and a widespread lack of transparency in the patent system together make abusive patent enforcement a common occurrence both in and outside the technology sector. As a result, billions of dollars that might otherwise be used to hire and retain employees, to improve existing products, and to launch new products are, instead, diverted to socially wasteful litigation.

Professors' Letter in Support of Patent Reform Legislation (Nov. 25, 2013).[23]

The political questions surrounding the costs of PAE litigation and what legislative reforms may happen to curb those costs, however, are irrelevant to the determination of the contours of Section 285, which Congress first passed in 1946 and then amended in the Patent Act of 1952. Moreover, it is

---

[23] Available at https://www.eff.org/files/2013/11/25/prof_ltr_nov_25_0.pdf.

unclear what—if anything—Congress will do in response to the recent political pressure, and this Court would respectfully be remiss to not address the question now.

CONCLUSION

Amici respectfully urge this Court to return Section 285 to its original moorings by giving lower courts the necessary discretion and flexibility to grant fee awards.

Dated: December 9, 2013

Respectfully submitted,

JULIE P. SAMUELS
Counsel of Record
DANIEL NAZER
ELECTRONIC FRONTIER FOUNDATION
815 Eddy Street
San Francisco, California 94109
(415) 436-9333
julie@eff.org

Attorneys for Amici Curiae Electronic Frontier Foundation, Application Developers Alliance, Engine Advocacy, and Public Knowledge

AMICUS CURIAE BRIEF

RECORD
AND
BRIEFS

No. 12-1184

Supreme Court, U.S.
FILED
DEC - 6 2013
OFFICE OF THE CLERK

In The
Supreme Court of the United States

OCTANE FITNESS, LLC,

Petitioner,

v.

ICON HEALTH & FITNESS, INC.,

Respondent.

On Writ Of Certiorari To The United States Court Of Appeals For The Federal Circuit

BRIEF OF PROFESSOR ROBIN FELDMAN AND THE U.C. HASTINGS INSTITUTE FOR INNOVATION LAW AS *AMICI CURIAE* IN SUPPORT OF NEITHER PARTY

ROBIN FELDMAN
Counsel of Record
UNIVERSITY OF CALIFORNIA,
HASTINGS COLLEGE OF THE LAW
200 McAllister Street
San Francisco, CA 94102
(415) 565-4661
feldmanr@uchastings.edu

Counsel for Amici Curiae

COCKLE LEGAL BRIEFS (800) 225-6964
WWW.COCKLELEGALBRIEFS.COM

Library of Congress
Law Library

TABLE OF CONTENTS

Page

TABLE OF CONTENTS i

TABLE OF AUTHORITIES ii

INTEREST OF THE *AMICI CURIAE* 1

SUMMARY OF ARGUMENT 3

ARGUMENT 6

I. THE "EXCEPTIONAL CASE" LANGUAGE OF § 285 SHOULD BE INTERPRETED IN A MANNER CONSISTENT WITH THE PROVISION'S PURPOSE: TO DETER PATENT HOLDERS FROM ABUSING THE PATENT SYSTEM 6

II. THE FEDERAL CIRCUIT'S TWO-PART EXCEPTIONAL CASE TEST HINDERS § 285's INTENDED PURPOSE TO DETER ABUSE OF THE PATENT SYSTEM 13

III. UNDER § 285, COURTS SHOULD BE PERMITTED TO FIND CASES EXCEPTIONAL WHERE PATENT HOLDERS EXPLOIT THE PATENT SYSTEM 19

CONCLUSION 21

TABLE OF AUTHORITIES

Page

CASES

Apple, Inc. v. Motorola, Inc., No. 1:11-CV-08540, 2012 WL 2362630 (N.D. Ill. E. Div. Jun. 7, 2012) 4

Automated Bus. Cos. v. NEC America, Inc., 202 F.3d 1353 (Fed. Cir. 2000) 2

Brooks Furniture Mfg., Inc. v. Dutailier Int'l, Inc., 393 F.3d 1378 (Fed. Cir. 2005) ..... *passim*

Catch Curve, Inc. v. Venali, Inc., CV 05-04820 DDP AJWx, 2006 WL 4568799 (C.D. Cal. Feb. 27, 2006) (filed Nov. 3, 2008) 15

eBay, Inc. v. MercExchange LLC, 547 U.S. 388 (2006) 8

Fromson v. W. Litho Plate & Supply Co., 853 F.2d 1568 (Fed. Cir. 1988), overruled by *Knorr-Bremse Systeme Fuer Nutzfahrzeuge GmbH v. Dana Corp.*, 383 F.3d 1337 (Fed. Cir. 2004) 8

F.T.C. v. Actavis, Inc., 133 S. Ct. 2223 (2013) 19

Georgia-Pac. Corp. v. U.S. Plywood Corp., 318 F. Supp. 1116 (S.D.N.Y. 1970), modified sub nom. *Georgia-Pac. Corp. v. U.S. Plywood-Champion Papers Inc.*, 446 F.2d 295 (2d Cir. 1971) 8, 9

Handgards, Inc. v. Ethicon Inc., 601 F.2d 986 (9th Cir. 1979) 16

Honeywell Int'l, Inc. v. Universal Avionics Sys. Corp., 343 F. Supp. 2d 272 (D. Del. 2004), aff'd, 488 F.3d 982 (Fed. Cir. 2007) 16

TABLE OF AUTHORITIES – Continued

Page

Ill. Tool Works Inc. v. Indep. Ink, Inc., 547 U.S. 28 (2006) 18

Loctite Corp. v. Ultraseal Ltd., 781 F.2d 861 (Fed. Cir. 1985), overruled on other grounds by *Nobelpharma AB v. Implant Innovations, Inc.*, 141 F.3d 1059 (Fed. Cir. 1998) 16

Mathis v. Spears, 857 F.2d 749 (Fed. Cir. 1988) 3

Professional Real Estate Investors v. Columbia Pictures Industries, 508 U.S. 49 (1993) 2, 4

In Re Terazosin, 335 F. Supp. 2d 1336 (S.D. Fla. 2004) 15

CONSTITUTION AND STATUTES

U.S. Const. art. I, § 8, cl. 8. 12

35 U.S.C. § 284 (2006) 8

35 U.S.C. § 285 (2013) ..... *passim*

LEGISLATIVE SOURCES

S.Rep. No. 1503, 79th Cong., 2d Sess. (1946), *reprinted in* 1946 U.S. Code Congressional Service 1386 20

RULES

Supreme Court Rule 37.6 1

TABLE OF AUTHORITIES – Continued

Page

OTHER SOURCES

James E. Bessen & Michael J. Meurer, *The Direct Costs from NPE Disputes*, 99 Cornell L. Rev. ___ (forthcoming 2014), available at http://papers.ssrn.com/sol3/papers.cfm?abstract_id=2091210 12

Tom Ewing, *Indirect Exploitation of Intellectual Property Rights by Corporations and Investors*, 4 Hastings Sci. & Tech. L.J. 1 (2012) 7

Tom Ewing, *Practical Considerations in the Indirect Deployment of Intellectual Property Rights by Corporations and Investors*, 4 Hastings Sci. & Tech. L.J. 109 (2012) 7

Exec. Office of the President, *Patent Assertion and U.S. Innovation* (June 2013) 2

Robin Feldman, *Intellectual Property Wrongs*, 18 Stan. J.L. Bus. & Fin. 250 (2013), available at http://papers.ssrn.com/sol3/papers.cfm?abstract_id=2333291 ..... 2, 14

Robin Feldman, *Ending Patent Exceptionalism & Structuring the Rule of Reason: The Supreme Court Opens the Door for Both*, 15 Minn. J.L. Sci. & Tech. ___ (forthcoming 2013), available at http://papers.ssrn.com/sol3/papers.cfm?abstract_id=2333291 2

Robin Feldman et al., *The AIA 500 Expanded: Effects of Patent Monetization Entities* (April 9, 2013), UC Hastings Research Paper No. 45, available at http://ssrn.com/abstract=2247195 11

TABLE OF AUTHORITIES – Continued

Page

Robin Feldman, *Public Comment on Intellectual Property Assertion & Monetization*, FTC Patent Assertion Entity Activities Workshop (Mar. 27, 2013) 14

Robin Feldman, *Rethinking Patent Law* (Harvard 2012) 1, 14

Robin Feldman, *The Role of Science in Law* (Oxford 2009) 1

Robin Feldman, *Patent and Antitrust: Differing Shades of Meaning*, 13 Va. J.L. & Tech. 5 (2008) 17

James Gibson, *Risk Aversion and Rights Accretion in Intellectual Property Law*, 116 Yale L.J. 882 (2007) 15

Edmund W. Kitch, *The Nature and Function of the Patent System*, 20 J.L. & Econ. 265 (1977) 10

Mark A. Lemley, *Rational Ignorance at the Patent Office*, 95 Nw. U. L. Rev. 1495 (2001) 11

Mark A. Lemley & Carl Shapiro, *Probabilistic Patents*, 19 J. Econ. Persp. 75 (2005) 18

Fiona Scott Morton & Carl Shapiro, *Strategic Patent Acquisitions*, available at http://papers.ssrn.com/sol3/papers.cfm?abstract_id=2288911 13

Gideon Parchomovsky & R. Polk Wagner, *Patent Portfolios*, 154 U. Pa. L. Rev. 1 (2005) 10

TABLE OF AUTHORITIES – Continued

Page

Jeff John Roberts, *Famous judge spikes Apple-Google case, calls patent system "dysfunctional"*, GigaOM (Jun. 8, 2012), available at http://gigaom.com/2012/06/08/famous-judge-spikes-apple-google-case-calls-patent-system-dysfunctional/ 4

INTEREST OF THE *AMICI CURIAE*[1]

Amicus curiae Professor Robin Feldman is an expert in intellectual property law, particularly issues involving the sciences, intellectual property monetization, and the intersection of intellectual property and antitrust. She is a Professor of Law at the University of California, Hastings College of the Law, and holds the Harry & Lillian Hastings Chair. Professor Feldman is Director of *amicus curiae* the Institute for Innovation Law, focused on innovation at the crossroads of intellectual property and emerging technology. She also directs clinical programs in intellectual property, including the Startup Legal Garage, and writes extensively about intellectual property issues. She has received multiple awards for teaching and scholarship, and has published two books, *Rethinking Patent Law* (Harvard 2012) and *The Role of Science in Law* (Oxford 2009), in addition to numerous articles in law reviews and the New England Journal of Medicine. Professor Feldman has testified before Congress and the California legislature on intellectual property issues, and has provided commentary for the Federal Trade Commission, the Department of Justice, and the Patent & Trademark Office. Her empirical work on patent trolling was

---

[1] Counsel for all parties has consented to the filing of this brief, as indicated by consents lodged with the Clerk of this Court. No counsel for any party had any role in authoring this brief, and no person other than the named *amici* and their counsel has made any monetary contribution to the preparation of this brief. *See* Rule 37.6.

cited in the 2013 White House Report on Patent Assertion.[2]

Amici curiae Professor Feldman and the Institute for Innovation Law at the University of California, Hastings College of the Law submit this brief to highlight for the Court the critical role fee shifting provisions, like 35 U.S.C. § 285 (2013) at issue here, play in preventing abusive exploitation of the intellectual property system, particularly in light of the growing trend of monetization and magnification across all types of intellectual property.[3] By importing to the patent context this Court's heightened test for the "sham" exception to the doctrine of immunity in antitrust cases,[4] the Federal Circuit has hindered § 285's essential role as a deterrent to 'improper bringing of clearly unwarranted suits' for patent infringement." *Automated Bus. Cos. v. NEC America, Inc.*, 202 F.3d 1353, 1355 (Fed. Cir. 2000) (quoting

---

[2] Exec. Office of the President, *Patent Assertion and U.S. Innovation* (June 2013).

[3] Portions of this brief were adapted from two of Professor Feldman's most recent articles, *Intellectual Property Wrongs*, 18 Stan. J.L. Bus. & Fin. 250 (2013), and *Ending Patent Exceptionalism & Structuring the Rule of Reason: The Supreme Court Opens the Door for Both*, 15 Minn. J.L. Sci. & Tech. ___ (forthcoming 2013), available at http://papers.ssrn.com/sol3/papers.cfm?abstract_id=2333291.

[4] *See Brooks Furniture Mfg., Inc. v. Dutailier Int'l, Inc.*, 393 F.3d 1378, 1381 (Fed. Cir. 2005) (citing *Professional Real Estate Investors v. Columbia Pictures Industries*, 508 U.S. 49, 60-61, 113 S. Ct. 1920, 123 L.Ed.2d 611 (1993)).

Mathis v. Spears, 857 F.2d 749, 754 (Fed. Cir. 1988)). Importantly, as the Federal Circuit has itself recognized, § 285 "is the *only* deterrent" to suits brought to enforce "obviously invalid or unenforceable patents. . . ." *Mathis*, 857 F.2d at 754 (emphasis added).

SUMMARY OF ARGUMENT

In recent years, a troubling trend has occurred in the intellectual property system in the United States. Large numbers of intellectual property rights have been stripped away from underlying products, repackaged, grouped, and traded as monetized assets, a phenomenon known as intellectual property rights "monetization." Some of this activity involves legitimate enforcement of rights, but much of it is opportunistic, inappropriately capitalizing on the costs and risks of litigation. In addition, the intellectual property system is plagued by uncertainty regarding the boundaries of rights, lack of a quick and reasonably priced method for resolving disputes regarding the boundaries of those rights, and potential damages that are out of proportion to the nature of the harm. These factors allow rights holders to bargain for returns far beyond the value of those rights, a situation known as "magnification." Together, magnification and monetization are creating opportunities for behavior that is harming innovation, creating dysfunction in markets, and wasting vast amounts of resources, both litigant and judicial. As federal district court judge James Roberts noted recently, in

frustration, "the court is well aware that it is being played as a pawn."[5]

Against this backdrop, the Federal Circuit's current two-part "exceptional case" test for fee shifting under 35 U.S.C. § 285 merely provides fuel to the fire. Permitting fee shifting under § 285 only if *both* (1) the litigation is brought in *subjective* bad faith, *and* (2) the litigation is objectively baseless (*Brooks Furniture*, 393 F.3d at 1381 (citing *Professional Real Estate Investors*, 508 U.S. at 60-61)), creates a standard so high it presents no meaningful deterrent to the pursuit of wholly unwarranted lawsuits. It is remarkably difficult to show that any patent lawsuit is both objectively and subjectively baseless, when, for example, the interpretation of the language of a patent is fraught with uncertainty. In such cases, courts are reluctant to find that even tremendously weak arguments satisfy the two-part test.

Amici urge the Court to articulate a standard for fee shifting under § 285 which empowers courts to remedy schemes that exploit the patent system. The key to identifying exceptional cases and thereby disrupting the practice of patent holders distorting

---

[5] *See* Jeff John Roberts, *Famous judge spikes Apple-Google case, calls patent system "dysfunctional"*, GigaOM (Jun. 8, 2012), available at http://gigaom.com/2012/06/08/famous-judge-spikes-apple-google-case-calls-patent-system-dysfunctional/ (discussing *Apple, Inc. v. Motorola, Inc.*, No. 1:11-CV-08540, 2012 WL 2362630, at *1 (N.D. Ill. E. Div. Jun. 7, 2012)).

and inflating the value of their patents lies in the distinction between the *legitimate* use of the patent *right* and the *illegitimate* use of the patent *system*. By highlighting this system deployment versus right deployment dichotomy, the Court can provide lower courts a useful starting point from which to assess the myriad patent assertion schemes as they are presented. Where a patentee brings a cause of action that attempts to enforce the boundaries of its patent and nothing more, the patentee is appropriately deploying its patent rights, and is doing nothing exceptional for purposes of § 285. Conversely, where the patentee's actions have allowed it to reap or potentially reap rewards far in excess of the value of the patent through abuse of the patent system (as, for example, asserting a never-commercialized arguably obsolete patent as Petitioner argues was done here), the court should have the discretion to look more closely at *all* the factors in play and, in its discretion, award § 285 fees where appropriate.

ARGUMENT

I. THE "EXCEPTIONAL CASE" LANGUAGE OF § 285 SHOULD BE INTERPRETED IN A MANNER CONSISTENT WITH THE PROVISION'S PURPOSE: TO DETER PATENT HOLDERS FROM ABUSING THE PATENT SYSTEM

The Federal Circuit's current interpretation of the exceptional case doctrine has aided in the proliferation of business practices that would make Rumpelstiltskin proud. With virtual impunity, more and more companies are spinning worthless patents into golden income streams and competitive advantages. The schemes companies have used to achieve these fairy tale ends are numerous and varied, but they share one underlying idea: Find a patent, deploy the patent system, and the riches will follow.

The combination of uncertainty regarding the boundaries of rights, the lack of a quick and inexpensive method for resolving that uncertainty, and the possibility that damages awarded may be out of proportion to the nature of the harm make the modern patent system a complex and multi-dimensional strategy game. When patent holders take advantage of these system inefficiencies it is possible for them to distort and inflate the value of their patents. This value magnification occurs for several reasons. First, it is simply impossible to know the full boundaries of a patent at the time the patent is granted. A patent is not a physical object, but a verbal description of something that may not even exist in tangible form.

As a result, it can be very difficult to say exactly what is included within the boundaries of a given patent, especially as time passes and technology develops. The sheer volume of modern patents adds to the challenge. The patent system allows patents to be overlapping, and the millions of patents active in the United States makes determining the boundaries of each one impossible. Moreover, the massive number of patent applications filed each year in comparison to the number of patent examiners ensures that examiners will spend very little time on each application, leaving the litigation system to weed out patents as they become commercially significant.

Second, the patent system lacks a quick and inexpensive way to resolve the uncertainty about the boundaries of a particular patent. Scholars estimate that the average patent trial lasts from nine to fifteen months and costs from one to six million dollars.[6] In addition to the problems of uncertainty and the costs of resolving that uncertainty, the remedy system in patents can create a distortion between a patent's value and the return that a patent holder can gain. With a finding of infringement, a patent holder can receive an injunction against the infringer. Although

---

[6] Tom Ewing, *Indirect Exploitation of Intellectual Property Rights by Corporations and Investors*, 4 Hastings Sci. & Tech. L.J. 1, 34, 63 (2012); Tom Ewing, *Practical Considerations in the Indirect Deployment of Intellectual Property Rights by Corporations and Investors*, 4 Hastings Sci. & Tech. L.J. 109, 119, 131 (2012).

the pace of injunctions has slowed in the wake of *eBay, Inc. v. MercExchange LLC*, 547 U.S. 388 (2006), courts still grant injunctions in a significant number of cases. Thus, when a company producing an actual product is threatened with an infringement claim by a patent holder, the company must decide whether to risk having its entire product shut down. If the patent claim relates only to a small aspect of the product, the threat of injunction creates an inordinate risk, one much more costly than the value the patent could possibly contribute to the whole product.

Injunctions are not, however, the only risk to a threatened patent infringement defendant. The damage measurements available in patent cases significantly heighten the risk of magnification. According to the Patent Act, courts are to award damages "adequate to compensate for the infringement, but in no event less than a reasonable royalty for the use made of the invention." 35 U.S.C. § 284 (2006). The language is perfectly reasonable in the abstract; it is the application of the language that has been problematic. Part of the problem flows from the so-called "*Georgia-Pacific*" test that many courts use to determine reasonable royalties. It is an elaborate, 15-part test introduced by a district court in the 1970s, in which not all factors are relevant to all cases and courts do not always use the same factors. *See Georgia-Pac. Corp. v. U.S. Plywood Corp.*, 318 F. Supp. 1120 (S.D.N.Y. 1970), modified sub nom. *Georgia-Pac. Corp. v. U.S. Plywood-Champion Papers Inc.*, 446 F.2d 295 (2d Cir. 1971). With such variability, the test has been described as involving more the talents of a conjuror than a judge. *See Fromson v. W. Litho*

Plate & Supply Co., 853 F.2d 1568, 1574 (Fed. Cir. 1988), overruled by *Knorr-Bremse Systeme Fuer Nutzfahrzeuge GmbH v. Dana Corp.*, 383 F.3d 1337 (Fed. Cir. 2004) (describing a practitioner's comment).

The *Georgia-Pacific* test is particularly troubling in the way it has been applied to complex multipart products. When a product is made up of many components, the price of the product may reflect not just one patented process or component, but also dozens of other patented inventions. The price may also reflect unpatented technology included in the product, as well as the value added by the manufacturer in putting everything together and marketing the product. The *Georgia-Pacific* test does not adequately take all of this into account, and patented inventions that make a small contribution to an overall product have received damage awards well beyond their contribution to the whole, or based on a distorted view of the whole.

Magnification, in combination with the increasingly popular practice of patent monetization, has created the perfect storm for patent abuse. The patent system has long operated with the comfort of knowing that only a tiny percentage of patents will ever earn a return. But, today, large numbers of patents that would not have garnered any return in the past are being traded and monetized. Their presence in the market, particularly in the form of commoditized, tradable rights, enhances the uncertainty and game playing that allows patent holders to obtain rights above the value of the patents themselves. The current rush toward monetization is

contributing to the ability of patent holders to bargain for more than the patent is worth, as well as creating distortions in the market for patents. Traditionally, the patent system has operated with a high percentage of "shadow patents" – patents that are never actualized but remain largely invisible, on the periphery of the patent system. The vast majority of patents have never directly earned a return for the patent holder. Estimates suggest that the number is well above 90%. Gideon Parchomovsky & R. Polk Wagner, *Patent Portfolios*, 154 U. Pa. L. Rev. 1, 5 (2005) (noting that estimates suggest that less than 5 percent of patents hold any value); *see also* Edmund W. Kitch, *The Nature and Function of the Patent System*, 20 J.L. & Econ. 265, 267 (1977). These patents do have some impact. Among other things, they clog the patent system, making it even more difficult for manufacturers to know whether a potential product would infringe any existing rights. Nevertheless, they do not extract any direct returns for their inventors.

In fact, many of these shadow patents were never intended to earn a direct return. When a company patents a particular invention, the company will engage in a series of defensive patents that are intended to cover variations or improvements that others could come up with. The intent is not to create new products, but to keep others out of the commercial space in which the product is operating, and to protect the company if competitors try to sue. Many of these unrealized patents, along with patents in

general, are of questionable validity. The patent approval system has nowhere near the resources necessary to weed out patents that are weak. One scholar estimates that the average patent examiner spends 18 hours over a period of two to three years examining a particular patent. Mark A. Lemley, *Rational Ignorance at the Patent Office*, 95 Nw. U. L. Rev. 1495, 1500 (2001). This is a remarkably small amount of time to evaluate highly technical documents that may contain dozens or even hundreds of separate claims.

If it is too great a burden on the patent office to examine each patent application extensively, imagine what would happen to the entire patent system if every patent, or even large numbers of the shadow patents, were to become monetized. That, however, is precisely what is happening in the modern patent system. According to a recent analysis of all patent litigation filed in four years, 2007-2008 and 2011-2012,[7] patent infringement litigation by patent monetization entities has risen dramatically over a remarkably short period of time. The study analyzed roughly 13,000 cases involving almost 30,000 asserted patents, and perhaps the most notable finding was that, in 2012, litigation by patent monetizers represented a *majority* of the patent litigation filed in the

---

[7] Robin Feldman et al., *The AIA 500 Expanded: Effects of Patent Monetization Entities* (April 9, 2013), UC Hastings Research Paper No. 45, available at http://ssrn.com/abstract=2247195.

United States. Specifically, patent monetizers filed 58.7% of the patent lawsuits in 2012. This was a sharp rise from 2007, when patent monetizers filed just 24.6% of patent infringement litigations. Additionally, the data showed that the parties who filed the highest number of patent lawsuits were generally monetizers. Of the 10 parties who filed the greatest number of patent cases in the years studied, *all were patent monetizers*.

The modern combination of magnification and monetization is playing out in ways wholly inconsistent with the goals of the patent system. The Constitutional language explains that the goal of the patent system is "to promote the progress . . . of the useful arts." U.S. Const. art. I, § 8, cl. 8. In other words, patents do not, for example, seek to promote science for the sake of science but, rather, encourage the creation of products that will be useful and beneficial to society. Although enormous amounts of money are being paid through patent assertion, there is no evidence to suggest that much in the way of new products are emerging from all of the modern patent assertion activity. As Professors Bessen and Meurer have estimated, patent demands by monetizers cost U.S. companies 29 billion dollars in 2011 alone.[8]

---

[8] *See* James E. Bessen & Michael J. Meurer, *The Direct Costs from NPE Disputes*, 99 Cornell L. Rev. ___ (forthcoming 2014), available at http://papers.ssrn.com/sol3/papers.cfm?abstract_id=2091210.

Moreover, in what economists are calling the "leaky bucket," very little of that money flowed back to inventors or innovation.[9] Only an estimated 20% of 29 billion dollars flowed back to original inventors or went into any internal R&D by the monetizers themselves. Instead of rewarding innovation, the patent system has begun to look like the Wild West with no sheriff in sight. Courts should – indeed, *must* – have the discretion to look more closely at all the factors in play and, in their discretion, award § 285 fees where appropriate as a meaningful deterrent to the pursuit of wholly unwarranted lawsuits.

II. THE FEDERAL CIRCUIT'S TWO-PART EXCEPTIONAL CASE TEST HINDERS § 285's INTENDED PURPOSE TO DETER ABUSE OF THE PATENT SYSTEM

When the Federal Circuit conflated this Court's two-part definition of sham litigation in antitrust cause of actions with § 285 fee shifting, it elevated the exceptional case standard to unreachable heights. To establish that a lawsuit is an exceptional case, one must show that the suit is both objectively and subjectively baseless. *Brooks*, 393 F.3d at 1381. With the vast uncertainty involved in interpreting the language of any patent, it is remarkably difficult

---

[9] *See id.*; Fiona Scott Morton & Carl Shapiro, *Strategic Patent Acquisitions*, available at http://papers.ssrn.com/sol3/papers.cfm?abstract_id=2288911.

to show that any patent lawsuit is both objectively and subjectively baseless. Feldman, *Rethinking Patent Law*, at 168 ("Proving sham litigation, however, requires satisfaction of a remarkably high burden. . . ."). An argument can always be made in patent law that there was reason to believe someone might construe language somewhere in some claim in a way that is favorable. Even if the argument is tremendously weak, courts are reluctant to find that it satisfies the two-part test. Robin Feldman, *Public Comment on Intellectual Property Assertion & Monetization*, FTC Patent Assertion Entity Activities Workshop (Mar. 27, 2013).

Indeed, overcoming the two-part test in patent cases has proven difficult in a variety of contexts. Consider the case of an electronic fax company that acquired broadly worded patents and asserted them against numerous competitors.[10] The patents were related to telephone switchboard technology. Many of those against whom the patents were asserted chose to settle, and a couple of those competitors were subsequently acquired by the electronic fax company. A few defended against the infringement claim, with one competitor filing an antitrust counterclaim. The district court rejected the antitrust claim on summary judgment on the grounds that the claim could not overcome the Federal Circuit's stringent two-part

---

[10] *See Intellectual Property Wrongs*, 18 Stan. J.L. Bus. & Fin. 250, 284-292 (2013).

test. One aspect of the summary judgment decision is particularly striking. The court felt that, although prior suits were not resolved by a court or jury on the merits and no prior court had construed any of the patent claims, the fact that prior cases had ended in settlements should be considered "litigation success."[11] The court did not discuss any of the other factors at play, including allegations setting forth a pattern of aggressive behavior, unsupportable patent interpretations, and intimidation aimed at a broad array of competitors. Notably, the court reasoned that, because the patent owners sought an injunction or damages through an infringement suit, the fact that the defendants paid licensing fees reflected a successful case.

The problem with this logic is the feedback loop it creates.[12] In the modern world of patent monetization,

---

[11] *See Catch Curve, Inc. v. Venali, Inc.*, CV 05-04820 DDP AJWx, 2006 WL 4568799 (C.D. Cal. Feb. 27, 2006) (filed Nov. 3, 2008) at 18; *see also In Re Terazosin*, 335 F. Supp. 2d 1336, 1358 n.13 (S.D. Fla. 2004) (noting that "'[T]he court cannot agree with Plaintiffs that a plaintiff who has filed suit and receives the relief sought (e.g., monetary compensation, a change in conduct, etc.) could only have been deemed to have 'won' under PRE if it continued to litigate the case and received a favorable judgment from the court").

[12] *Cf.* James Gibson, *Risk Aversion and Rights Accretion in Intellectual Property Law*, 116 Yale L.J. 882, 882 (2007) (arguing that "[s]eeking a license where none is needed is problematic because 'the existence (vel non) of licensing markets plays a key role in determining the breadth of rights, [so] these . . . decisions eventually feed back into doctrine, as the licensing itself becomes proof that the entitlement covers the use.'").

an aggressive and well-financed patent holder can pressure smaller or less sophisticated targets into settling, simply because the costs of litigation are too burdensome. By choosing one's targets wisely, a savvy monetizer can target vulnerable plaintiffs early on and establish a string of settlements, which can then be used to convince other targets to settle and convince a court that the entire campaign was meritorious from the outset. Significantly, in some electronic fax cases that have actually proceeded to determination of patent applicability, the telephone switchboard patents at issue were held *not to apply* to electronic fax technology. That decision is cold comfort to those who paid for licenses and those who were unable to overcome the two-part test.

Compounding this unfortunate conundrum, the Federal Circuit in *Brooks* suggested that the burden for proving sham litigation should be *even higher* in cases that involve patents, on the grounds that patents are presumptively valid. *See Brooks*, 393 F.3d at 1382; *see also, e.g.*, *Loctite Corp. v. Ultraseal Ltd.*, 781 F.2d 861, 876 (Fed. Cir. 1985), overruled on other grounds by *Nobelpharma AB v. Implant Innovations, Inc.*, 141 F.3d 1059 (Fed. Cir. 1998); *Handgards, Inc. v. Ethicon Inc.*, 601 F.2d 986, 996 (9th Cir. 1979); *Honeywell Int'l, Inc. v. Universal Avionics Sys. Corp.*, 343 F. Supp. 2d 272 (D. Del. 2004), aff'd, 488 F.3d 982 (Fed. Cir. 2007). This is a remarkable misinterpretation of patent law. It is true that a patent carries a presumption of validity, but that has nothing to do with whether the *assertion* of the patent against a

particular target is valid. Indeed, asking this question does not conflict with patent policy but, rather, helps to ensure that a patent is enforced consistent with patent policy.

The *Brooks* court's invocation of the presumption of patent validity misconstrues the nature of patent law, imparting an artificial significance to patents, which distorts the patent system as well as the other legal domains with which it must interact. This artificial significance, or patent exceptionalism, has allowed patent holders effectively to abuse the patent system. Patent exceptionalism flows, to some extent, from a distorted view of what a patent actually is. The notion of exclusion in patent law is quite different from the notion of exclusion in antitrust law, or in popular discourse. In antitrust law, exclusion, as in exclusion of rivals, connotes an image of occupying a competitive sphere to prevent the incursion of rivals. The patent notion of exclusion is, however, far more subtle. Despite much broad-brush language from courts and commentators, a patent does *not* grant an exclusive right to make, use, or sell a product. *See, e.g.*, Robin Feldman, *Patent and Antitrust: Differing Shades of Meaning,* 13 Va. J.L. & Tech. 5, 8 n.27, 9 n.36 (2008). In fact, a patent does not grant the right to do anything affirmative at all. A patent merely grants the right to exclude others from making, using, or selling the invention, but that right can be overlapping. In other words, all you get is the right to exclude others from standing in the sphere of the invention – as long as they do not have their own rights to be standing in that sphere as well. The

difference is more than one of semantics. The patent system contemplates far less power and control than many people assume. Oblivious to this, courts treat patents as exceptional creatures, endowing them with a power well beyond what is contemplated by the patent system itself.

In a similar vein, courts and commentators often assume that a patent confers a monopoly. This is simply untrue. A patent may give its holder the opportunity to try to carve out space in the market or to find others interested in licensing the patent to do so, but that pursuit rarely succeeds, let alone leads to a monopoly. Historically, the vast majority of patents never create any economic return at all. *See, e.g.*, Mark A. Lemley & Carl Shapiro, *Probabilistic Patents*, 19 J. Econ. Persp. 75, 75 (2005). Translating a patented idea into an actual product usually requires the use of multiple patented inventions, as well as much that is not patented. In the pharmaceutical arena, for example, one must be able to translate the patent into a product that is stable and can be mass-produced, as well as one that is approved by the Food and Drug Administration. In addition, there may be other close substitutes or sufficient cross-market elasticities. This Court has itself recognized that a patent does not necessarily confer a monopoly. *See Ill. Tool Works Inc. v. Indep. Ink, Inc.*, 547 U.S. 28, 45-56 (2006) (holding that a patent by itself is not sufficient to create a presumption of market power for the purposes of a tying claim). A patent is, in short, a remarkably limited right, and its limited nature

reflects the policies inherent in the patent system. The Federal Circuit application of this Court's two-part definition of sham litigation in antitrust cause of actions to § 285 fee shifting ignores the nature of a patent, and the policies underlying the rights it protects.

III. UNDER § 285, COURTS SHOULD BE PERMITTED TO FIND CASES EXCEPTIONAL WHERE PATENT HOLDERS EXPLOIT THE PATENT SYSTEM

The surge of patent magnification and monetization, the rigidity of the Federal Circuit's sham litigation rules, and the rise of patent exceptionalism have created a substantial risk of giving companies a free pass to exploit the patent system. Section 285 was intended to and should give courts the power to police efforts to exploit the system by awarding fees to the prevailing party in exceptional cases. The key to identifying exceptional cases and thereby disrupting these practices lies in acknowledging the difference between the legitimate use of the patent right and the illegitimate use of the patent system.

This Court recently recognized the importance of empowering courts with the discretion to investigate and remedy schemes that may expand patent rights beyond their legal limits by exploiting the patent system. In *F.T.C. v. Actavis, Inc.*, this Court recognized the anticompetitive potential of reverse payment settlements in the context of Hatch-Waxman litigation.

133 S. Ct. 2223, 2237 (2013). Rather than mandate rigid rules, the Court wisely utilized a broad framework, the rule of reason, which the lower courts could structure and develop as appropriate. In so doing, the Court recognized that freedom and flexibility was necessary to allow the courts to analyze adequately the complex interests and considerations at play.

Reverse payments are one of many potentially abusive schemes that could deploy the patent system in a manner that inflates the value and power of an underlying patent right. The lower courts should, similarly, be empowered to utilize § 285 to address other schemes that exploit the patent system. Whether that behavior is in the context of Hatch-Waxman litigation, patent trolling, or other circumstances, courts must be able to separate use of the intellectual property right from use of the intellectual property system, as well as to identify when the intellectual property system is being used in an inappropriate manner.

Section 285 was "made general as to enable the court to prevent a gross injustice to the alleged infringer." *See* S.Rep. No. 1503, 79th Cong., 2d Sess. (1946), *reprinted in* 1946 U.S. Code Congressional Service 1386, 1387. Such an injustice occurs when the patent system is improperly deployed to provide the patentee with benefits beyond those established by the underlying patent right, to the detriment of the defendant, the judiciary, and the patent system itself.

CONCLUSION

Amici urge this Court to interpret § 285 consistent with its intended purpose to deter abuse of the patent system. Courts should have the power to utilize § 285 to remedy schemes that expand patent rights beyond their legal limits by exploiting the patent system. Because the Federal Circuit misconstrued this Court's heightened test for the "sham" exception to the doctrine of immunity in antitrust cases as applying in the patent context, the instant Writ of Certiorari is properly granted for consideration of the issues raised herein.

Respectfully submitted,

ROBIN FELDMAN
Counsel of Record
UNIVERSITY OF CALIFORNIA,
HASTINGS COLLEGE OF THE LAW
200 McAllister Street
San Francisco, CA 94102
(415) 565-4661
feldmanr@uchastings.edu

Counsel for Amici Curiae

December 6, 2013

AMICUS CURIAE BRIEF

No. 12-1184

In The
Supreme Court of the United States

OCTANE FITNESS, LLC,

Petitioner,

v.

ICON HEALTH & FITNESS, INC.,

Respondent.

On Writ Of Certiorari To The United States Court Of Appeals For The Federal Circuit

BRIEF OF THE FOOD MARKETING INSTITUTE AS *AMICUS CURIAE* IN SUPPORT OF PETITIONER

ERIK LIEBERMAN
FOOD MARKETING INSTITUTE
2345 Crystal Drive
Suite 800
Arlington, VA 22202
(202) 452-8884

DAVID A. BALTO
Counsel of Record
MATTHEW C. LANE
LAW OFFICES OF DAVID A. BALTO
1325 G Street, NW
Suite 500
Washington, DC 20005
(202) 789-5424
david.balto@yahoo.com

COCKLE LEGAL BRIEFS (800) 225-6964
WWW.COCKLELEGALBRIEFS.COM

TABLE OF CONTENTS

	Page
TABLE OF AUTHORITIES	iii
INTERESTS OF *AMICUS CURIAE*	1
INTRODUCTION AND SUMMARY OF ARGUMENT	2
ARGUMENT	6
I. UNSCRUPULOUS PATENT HOLDERS EXPLOIT THE PATENT SYSTEM AND CREATE SOCIAL HARMS	6
A. THE HIGH COST OF LITIGATION ALLOWS PATENT HOLDERS TO PROFIT FROM THE PATENT SYSTEM REGARDLESS OF WHETHER THEIR PATENT IS VALID OR INFRINGED	6
B. THE CURRENT FEDERAL CIRCUIT TEST MAKES § 285 VIRTUALLY UNAVAILABLE FOR DEFENDANTS	9
II. MERITLESS SUITS BY PATENT TROLLS POSE A SIGNIFICANT THREAT TO CONSUMER WELFARE	11
A. MERITLESS SUITS HARM END USERS SUCH AS RETAILERS WHOSE COSTS ARE INCREASED AND MUST FOREGO ADVANCES IN TECHNOLOGY THAT WOULD BENEFIT CONSUMERS	12

TABLE OF CONTENTS – Continued

Page

B. THE PROBLEM HAS BECOME SIGNIFICANT ENOUGH TO WARRANT CONGRESSIONAL ATTENTION 14

III. THE FEDERAL CIRCUIT TEST WAS MISAPPROPRIATED FROM THE NOERR-PENNINGTON DOCTRINE WHICH WAS CREATED TO PROTECT COMPLETELY DIFFERENT INTERESTS 16

CONCLUSION 18

TABLE OF AUTHORITIES

Page

CASES

Brooks Mfg. v. Dutailier, Inc., 393 F.3d 1378 (Fed. Cir. 2005) 2, 5, 9, 14, 15

Citizens United v. FEC, 558 U.S. 310 (2009) 17

Eastern R. Presidents Conference v. Noerr Motor Freight, Inc., 365 U.S. 127 (1961) 16

Lumen View Tech. LLC v. Findthebest.com, Inc., 13 Civ. 3599, 2013 U.S. Dist. LEXIS 166852 (S.D.N.Y. Nov. 22, 2013) 7

Prof'l Real Estate Investors v. Columbia Pictures Indus., 508 U.S. 49 (1993) 5, 16, 17

STATUTES AND REGULATIONS

28 U.S.C. § 1927 16

35 U.S.C. § 285 ..... *passim*

F.R.C.P. RULE 11 16

F.R.C.P. RULE 37 16

F.R.A.P. 38 16

TABLE OF AUTHORITIES – Continued

Page

OTHER AUTHORITIES

Comments of American Intellectual Property Law Association to the United States Patent and Trademark Office, Request for Comments on a Patent Small Claims Proceeding in the United States, April 30, 2013, *available at* http://www.uspto.gov/ip/global/patents/comments/aipla_comment_letter_on_small_patent_claims_4-30-2013.pdf 6

Demand Letters and Consumer Protection: Examining Deceptive Practices by Patent Assertion Entities Before the S. Comm. on Commerce, Sci., & Transp. Subcomm. on Consumer Prot., Prod. Safety, and Ins., 113th Cong. 2 (2013) (written testimony of Jon Bruning, Att'y Gen. of the State of Neb.) 12

Demand Letters and Consumer Protection: Examining Deceptive Practices by Patent Assertion Entities Before the S. Comm. on Commerce, Sci., & Transp. Subcomm. on Consumer Prot., Prod. Safety, and Ins., 113th Cong. 3 (2013) (written testimony of Lary Sinewitz, Exec. Vice President of BrandsMart USA) 12, 13

Erik Hovenkamp, Predatory Patent Litigation 8 (Aug. 5, 2013) (unpublished manuscript) (on file with SSRN at http://ssrn.com/abstract=2308115) 8, 9

TABLE OF AUTHORITIES – Continued

Page

Full Calendar Year 2012 Report, PATSTATS.ORG, http://patstats.org/2012_full_year_w._breakdown.html 9

H.R. 3309: Improving the Patent System to Promote American Innovation and Competitiveness Before the H. Comm. on the Judiciary, 119th Cong. 1:21:23 (2013) (testimony of Krish Gupta, Senior Vice President and Deputy General Counsel, EMC Corporation) *available at* http://www.ustream.tv/recorded/40296631 10

Joe Mullin, *FindTheBest destroys "matchmaking" patent, pushes RICO case against troll*, ARS TECHNICA, Nov. 23, 2013, http://arstechnica.com/tech-policy/2013/11/findthebest-destroys-matchmaking-patent-pushes-rico-case-against-troll/ 7

John R. Allison, Mark A. Lemley, & Joshua Walker, *Patent Quality and Settlement Among Repeat Patent Litigants*, 99 Geo. L.J. 677, 686-87 (2011) 8

Matt Levy, *Patent Progress's Guide to Patent Reform Litigation*, PATENT PROGRESS (Nov. 19, 2013), http://www.patentprogress.org/2013/11/19/patent-progresss-guide-to-patent-reform-legislation/ 15

TABLE OF AUTHORITIES – Continued

Page

The Impact of Patent Assertion Entities on Innovation and the Economy Before the H. Comm. on Energy & Commerce Subcomm. on Oversight and Investigations, 113th Cong. 5 (2013) (written testimony of Jamie Richardson, Vice President Gov't & S'holder Relations, White Castle System, Inc.) 14

INTERESTS OF *AMICUS CURIAE*[1]

The Food Marketing Institute ("FMI") is a national trade association representing large, multi-store chains, regional firms and independent operators both in the United States and internationally. FMI conducts programs in public affairs, food safety, research, education and industry relations on behalf of its nearly 1,250 food retail and wholesale member companies in the United States and around the world. FMI's U.S. members operate more than 25,000 retail food stores and almost 22,000 pharmacies with a combined annual sales volume of nearly $650 billion. FMI's retail membership is composed of large multi-store chains, regional firms and independent operators. Its international membership includes 126 companies from more than 65 countries. FMI's nearly 330 associate members include the supplier partners of its retail and wholesale members. FMI is a not-for-profit corporation located in Arlington, Virginia and has no parent companies. No publicly-held company owns a ten percent or greater ownership interest in FMI.

---

[1] No counsel for a party authored this brief in whole or in part, and no such counsel or party made a monetary contribution intended to fund the preparation or submission of this brief. No person other than the *amicus curiae*, or their counsel, made a monetary contribution to its preparation or submission. The parties have filed blanket consents to the filing of *amicus curiae* briefs.

FMI is uniquely situated to provide perspective to the Court regarding the negative impacts of the Federal Circuit's rigid two-part test for determining whether a case is "exceptional" under 35 U.S.C. § 285. The businesses that FMI represents are "end-users" of important technology that reduces costs and benefits consumers. These end users are increasingly targeted by patent trolls who assert weak patents. FMI's members are low-margin operators who often cannot pursue high cost patent suits. These members are forced to settle at prices below the cost of litigation regardless of the probability the asserted patent is valid or infringed. FMI members do not find the likelihood of being awarded attorney's fees under the current test high enough to incentivize them to fight even meritless claims.

INTRODUCTION AND SUMMARY OF ARGUMENT

In 2005, the Federal Circuit inartfully ripped the sham litigation test from the Noerr-Pennington doctrine and transplanted it into a fee shifting law. This Federal Circuit decision in *Brooks Mfg. v. Dutailier, Inc.*, 393 F.3d 1378 (Fed. Cir. 2005) removed the district court's congressionally granted discretion pursuant to 35 U.S.C. § 285 to award reasonable attorney's fees in exceptional cases. The decision also increased the effectiveness of a strategy, called patent trolling, to abuse the patent system by asserting patents regardless if they are valid or infringed, in

order to leverage the high cost of litigation against lower priced settlements. The decision has increased the burden on end users of technology, like retailers, who are targeted by this patent troll strategy because they have little resources for or experience with patent litigation, or the third party's accused technology.

Patent trolls take advantage of the high cost of patent litigation to extort settlements from end users. It is estimated that a patent trial costs between $350,000 to $3,000,000 to reach the end of discovery and between $650,000 and $5,000,000 through trial. These high costs almost always significantly exceed settlement demands. So, in order to prevail against a meritless suit, the end user must spend far more than the offered settlement. Without the opportunity to recover attorney's fees there is no incentive for a patent troll's victim to defend itself in court.

The Federal Circuit's rigid two-part exceptional case test that the case be brought in subjectively bad faith and be objectively baseless sets too high a bar for defendants to rely on for relief. Alleged infringers often find this test to be unsurmountable for at least three reasons. First, patents can be difficult to interpret and usually must go through extensive claim construction proceedings before the boundaries of the patent claims are established, often late in a case. This allows many patent owners to greatly overstate what their patents actually claim while still presenting a question for the court. Second, patents are presumed valid. Finally, it can be nearly impossible to prove bad faith without a "smoking gun." These

aspects of patent law ensure that even the most ridiculous patent infringement claims could pass the Federal Circuits test.

Alleged infringers cannot rely on patent holders to rationally drop litigation they are certain to lose. In a traditional model a plaintiff would weigh their expected outcome of litigation against the costs of litigation when deciding whether to proceed. However, patent trolls have established a strategy of developing a reputation for aggressive litigation regardless of their odds of success or expected damages. This strategy means that alleged infringers cannot rely on patent holders to act rationally during settlement negotiations and must consider their own anticipated costs of litigation when deciding whether to settle.

The patent troll strategy, which remains unchecked by § 285, has had a substantial negative impact on retailers and consumers. Retailers are increasingly receiving demand letters for their use of new technologies and each demand letter costs a significant amount to resolve regardless of its merits. These costs are passed on to consumers either through increased prices or reduced services. The threat of patent litigation has also slowed or stalled adoption of new technologies that would add value to consumers. The problem is significant enough that end users have sought the aid of Congress and Congress has responded with a significant amount of proposed legislation. This legislation includes fee shifting provisions that would provide more clarity to

district court judges than currently exists under § 285.

The countervailing interests against an overly burdensome test for an award of attorney's fees under § 285 makes the Federal Circuit's adoption of the sham litigation test troubling. With no explanation, and little fanfare, the Federal Circuit in *Brooks Mfg.* transplanted a doctrine that has a long and storied history of careful balancing of fundamental rights into an unrelated body of law. The Noerr-Pennington doctrine was founded on the rights to political activity and the First Amendment right to petition the government. The sham litigation exception was carefully crafted to only include those cases where a plaintiff abuses the doctrine's immunity by disguising their illegal activity as an exercise of First Amendment rights. The bar established in *Prof'l Real Estate Investors v. Columbia Pictures Indus.*, 508 U.S. 49 (1993) is purposefully high because the rights affected are so great. Section 285 does not impact these rights in any way. The Federal Circuit wrongfully applied *Prof'l Real Estate* without examining the context behind the decision, and in doing so, robbed the district courts of their congressionally assigned discretion.

End users desperately need the protection of § 285 in order to fight meritless suits by patent trolls. The Federal Circuit's erroneous decision in *Brooks Mfg.* robs district court judges of the discretion to provide end users the protection that they need.

ARGUMENT

I. UNSCRUPULOUS PATENT HOLDERS EXPLOIT THE PATENT SYSTEM AND CREATE SOCIAL HARMS

The American patent system has been a boon to innovation and helped establish the United States as a global technology leader. However, no system is without its flaws. When exploited, these flaws hinder innovation, increase costs, and slow the adoption of new technologies. The Federal Circuit's rigid and hard to meet two-part test for defendants to recover under § 285 has entrenched one of these flaws, increasing the viability of using otherwise low value or worthless patents to hold up innocent companies, and retailers in particular.

A. THE HIGH COST OF LITIGATION ALLOWS PATENT HOLDERS TO PROFIT FROM THE PATENT SYSTEM REGARDLESS OF WHETHER THEIR PATENT IS VALID OR INFRINGED

The Achilles heel of the American patent system is the incredibly high cost of litigation. The American Intellectual Property Law Association estimates that the cost of litigation ranges from $350,000 to $3,000,000 to reach the end of discovery and from $650,000 to $5,000,000 to try a case.[2] These high costs

---

[2] Comments of American Intellectual Property Law Association to the United States Patent and Trademark Office, Request

(Continued on following page)

create a market for otherwise low value or worthless patents. A patent owner is in the position to offer an attractive deal compared to the cost of a defendant winning a patent trial. FindTheBest.com provides a typical example. They were threatened with a patent of extremely questionable validity. The patent troll offered them a choice between an extremely expensive patent trial and a $50,000 settlement offer.[3] Irrationally, FindTheBest.com chose to go to trial and spent $200,000 to invalidate the patent troll's patent.[4] Fortunately, the patent was invalidated early in litigation on Section 101 grounds, saving FindTheBest.com from having to enter into a costly discovery process. *Lumen View Tech. LLC v. Findthebest.com, Inc.*, 13 Civ. 3599, 2013 U.S. Dist. LEXIS 166852, at **34-37 (S.D.N.Y. Nov. 22, 2013).

While the high cost of litigation discourages defendants from mounting a substantive defense, it encourages litigation by patent plaintiffs. Typically, we would expect a defendant to only consider a threat to litigate credible when the probability of success times the anticipated damages minus the plaintiff's

---

for Comments on a Patent Small Claims Proceeding in the United States, April 30, 2013, *available at* http://www.uspto.gov/ip/global/patents/comments/aipla_comment_letter_on_small_patent_claims_4-30-2013.pdf.

[3] Joe Mullin, *FindTheBest destroys "matchmaking" patent, pushes RICO case against troll*, ARS TECHNICA, Nov. 23, 2013, http://arstechnica.com/tech-policy/2013/11/findthebest-destroys-matchmaking-patent-pushes-rico-case-against-troll/.

[4] *Id.*

cost of litigation is greater than zero.[5] If this value is below zero a defendant would not accept any settlement offers because the plaintiff's value of the suit is negative. However, if the plaintiff develops a reputation of litigating even negative value cases, then the defendant cannot rely on the plaintiff acting rationally during negotiations. A defendant faced with an irrational plaintiff will be forced to accept any settlement offer that is less than the defendants cost of litigation plus the probability of plaintiff prevailing times the expected damages.[6] It is worth noting that this formula produces significant values even when the probability of success or expected damages is zero. Indeed, a study has shown that cases involving frequently litigated patents are only successful ten percent of the time.[7]

This patent troll strategy creates social costs. The strategy incentivizes frivolous litigation which is a drain on practicing entities' resources.[8] Practicing entities are also encouraged to file applications for low quality patents because of their increased value in secondary markets. These patents, which compound

---

[5] Erik Hovenkamp, Predatory Patent Litigation 8 (Aug. 5, 2013) (unpublished manuscript) (on file with SSRN at http://ssrn.com/abstract=2308115).

[6] *Id.* at 16.

[7] John R. Allison, Mark A. Lemley, & Joshua Walker, *Patent Quality and Settlement Among Repeat Patent Litigants*, 99 Geo. L.J. 677, 686-87 (2011).

[8] Hovenkamp, *supra* note 5, at 17.

the problem, would otherwise not be worth filing. Finally, the patent trolling strategy has the overall effect of decreasing innovation by expanding patent thickets.[9] Companies that successfully innovate increase their risk of being targeted by patent trolls who can use old patents to hold that success hostage for easy payouts. End users who adopt new technology increase their risk of being sued by patent trolls capitalizing on their inability to afford patent litigation.

B. THE CURRENT FEDERAL CIRCUIT TEST MAKES § 285 VIRTUALLY UNAVAILABLE FOR DEFENDANTS

The Federal Circuit test established in *Brooks Mfg. v. Dutailier, Inc.*, 393 F.3d 1378 (Fed. Cir. 2005), for § 285 sets the bar for recovery high enough that it does not factor into an accused infringer's decision-making process when deciding whether to mount a defense. Attorney's fees were awarded in only 15 of the 2,917 cases decided in 2012.[10] In a real world example, Krish Gupta of EMC Corporation testified before the Senate that a patent troll sued on a number of products and made unreasonable discovery requests about a month before discovery was set to

---

[9] *Id.* at 17-18.

[10] *Full Calendar Year 2012 Report*, PATSTATS.ORG, http://patstats.org/2012_full_year_w._breakdown.html.

close.[11] EMC Corporation had to produce these discovery documents at great expense.[12] Meanwhile, the patent troll fought against discovery requests by EMC Corporation that when delivered showed that the patent troll had already licensed the patent to an upstream manufacturer.[13] EMC Corporation was covered under this license.[14] EMC sought to recover attorney's fees and costs but were denied.[15] Judgments such as these discourage defendants from fighting claims and encourage settlements out of court regardless of the strength of the claims.

Alleged infringers often find the Federal Circuit's test to be unsurmountable for several reasons. It is difficult to meet the objective prong because patents can be difficult to interpret and often must go through extensive claim construction proceedings before the boundaries of the patent claims are established. This allows many patent owners to greatly overstate what their patents actually claim while still presenting a question for the court. Also, a patent's presumption of validity must be overcome by a

---

[11] *H.R. 3309: Improving the Patent System to Promote American Innovation and Competitiveness Before the H. Comm. on the Judiciary*, 119th Cong. 1:21:23 (2013) (testimony of Krish Gupta, Senior Vice President and Deputy General Counsel, EMC Corporation) *available at* http://www.ustream.tv/recorded/40296631.

[12] *Id.*

[13] *Id.*

[14] *Id.*

[15] *Id.*

defendant. These aspects of patent law generate a substantial amount of work even in clear cases, making it difficult for a district court to declare a case to be objectively baseless. Finally, it can be nearly impossible to prove bad faith or inequitable conduct without a "smoking gun" because the uncertainties of patent law will almost always give the plaintiff a good faith excuse for pursuing court action.

The Federal Circuit's rigid test puts alleged infringers at a disadvantage by not permitting district courts to consider factors more important in deciding whether a case is extraordinary. These factors include whether the plaintiff's expected litigation outcome is negative, whether the plaintiff pursued the case irrationally, whether the plaintiff's goals were to generate costs for the defendant as leverage, and whether the plaintiff used the case to obtain a settlement based on the costs of defense instead of the value of the underlying patent.

II. MERITLESS SUITS BY PATENT TROLLS POSE A SIGNIFICANT THREAT TO CONSUMER WELFARE

Meritless suits by patent trolls have a negative impact on consumer welfare without any corresponding benefit. Patent trolls "typically lack any intention to develop the underlying technology, improve upon

it, or bring it to market."[16] Instead, patent trolls simply look to profit off the adoption of technology by end users *ex post* at significant cost.

A. MERITLESS SUITS HARM END USERS SUCH AS RETAILERS WHOSE COSTS ARE INCREASED AND MUST FOREGO ADVANCES IN TECHNOLOGY THAT WOULD BENEFIT CONSUMERS

Patent trolls are increasingly targeting end users because the end users' lack of resources, relevant technical knowledge, and legal expertise makes them easy prey for meritless suits.[17] Retailers, who often operate on low margins, are particularly vulnerable to patent troll demands. "Many retailers do not . . . employ legal counsel in-house, let alone a highly specialized patent attorney."[18] These low margins mean that any extra costs, whether they are costs to

---

[16] *Demand Letters and Consumer Protection: Examining Deceptive Practices by Patent Assertion Entities Before the S. Comm. on Commerce, Sci., & Transp. Subcomm. on Consumer Prot.*, Prod. Safety, and Ins., 113th Cong. 2 (2013) (written testimony of Jon Bruning, Att'y Gen. of the State of Neb.).

[17] *Demand Letters and Consumer Protection: Examining Deceptive Practices by Patent Assertion Entities Before the S. Comm. on Commerce, Sci., & Transp. Subcomm. on Consumer Prot.*, Prod. Safety, and Ins., 113th Cong. 3 (2013) (written testimony of Lary Sinewitz, Exec. Vice President of BrandsMart USA).

[18] *Id.*

settle or costs to litigate, cannot be easily absorbed and must be passed on to the consumer either through increased prices or reduced services.

Retailers are so vulnerable to patent troll suits that they can be forced into settlements without even infringing a patent. For example, BrandsMart USA received a two paragraph letter claiming infringement based on "technology that enables debit cards and gift cards to read and process information via the magnetic strip on the back of the card."[19] BrandsMart USA consulted a patent attorney and discovered they used technology different from that asserted.[20] The patent troll refused to drop their demand when informed of this and instead lowered their settlement offer.[21] BrandsMart eventually paid five figures for the patent troll to go away and another five figures in legal fees for the trouble.[22] This transaction occurred entirely outside of the court system because the threat of legal fees unrecoupable by § 285 was too great.

Meritless suits not only increase costs to consumers, but decrease the service provided to them as well. For example, White Castle testified before the House of Representatives that it will be limiting it's usage of QR codes and hyperlinks, as well as passing up

---

[19] *Id.* at 2.

[20] *Id.*

[21] *Id.*

[22] *Id.*

creative web designs due to patent troll threats.[23] White Castle has also stated that it is considering going away with digital menu boards "despite the potential business efficiencies they create for our operators and customers by allowing us to provide real-time up-to-date information about our latest products, promotions, and offering."[24]

These are the very harms Congress sought to avoid when they gave district courts the discretion to award attorney's fees in exceptional cases that abuse the patent system. The Federal Circuit's decision in *Brooks Mfg.* excises this congressionally granted discretion and substitutes it with its own judgment on what an exceptional case should be. As a result, companies cannot afford to risk litigation even when they are certain to prevail.

B. THE PROBLEM HAS BECOME SIGNIFICANT ENOUGH TO WARRANT CONGRESSIONAL ATTENTION

Retailers have been affected by patent trolls to such an extent that they have reached out to

---

[23] *The Impact of Patent Assertion Entities on Innovation and the Economy Before the H. Comm. on Energy & Commerce Subcomm. on Oversight and Investigations*, 113th Cong. 5 (2013) (written testimony of Jamie Richardson, Vice President Gov't & S'holder Relations, White Castle System, Inc.).

[24] *Id.* at 5-6.

Congress for help.[25] Congress has responded by conducting hearings including those by the Senate Commerce, Science & Transportation Committee and the House Energy & Commerce Committee.[26] There have also been 11 bills introduced to the current congressional session looking to alleviate the problem of patent trolls.[27] Four, including the Innovation Act, deal with the problem of patent trolls by introducing new language addressing the payment of attorney's fees.

In deciding this case, the Supreme Court should defer to Congress' constitutionally assigned role and presumed competence in the law making realm. The Supreme Court should reject the Federal Circuit's rigid two-part test established in *Brooks* and return discretion to the district court judges. If more clarity is needed to interpret § 285, then the Supreme Court should call on Congress to finish the task it has already begun; to redraft fee shifting standards in patent law cases.

---

[25] For example, the Stop Bad Patents campaign (seen at stopbadpatents.com), which was sponsored by the Food Marketing Institute, National Retail Federation, and the National Restaurant Association, placed targeted ads in several states urging people to contact their Congressman and urge them to stop patent trolls.

[26] *See supra* notes 16, 17, 23.

[27] For summaries of the bills currently before Congress *see* Matt Levy, *Patent Progress's Guide to Patent Reform Litigation*, PATENT PROGRESS (Nov. 19, 2013), http://www.patentprogress.org/2013/11/19/patent-progresss-guide-to-patent-reform-legislation/.

III. THE FEDERAL CIRCUIT TEST WAS MISAPPROPRIATED FROM THE NOERR-PENNINGTON DOCTRINE WHICH WAS CREATED TO PROTECT COMPLETELY DIFFERENT INTERESTS

The Noerr-Pennington doctrine is based substantially on the bill of rights. In *Noerr* the Supreme Court stated "[t]he right of petition is one of the freedoms protected by the Bill of Rights, and we cannot, of course, lightly impute to Congress [that the Sherman Act intended] to invade these freedoms." *Eastern R. Presidents Conference v. Noerr Motor Freight, Inc.*, 365 U.S. 127, 138 (1961). This Court has since reiterated that the Noerr-Pennington doctrine is based on the reasoning that the Sherman Act does not punish political activity nor invade "the First Amendment right to petition." *Prof'l Real Estate Investors v. Columbia Pictures Indus.*, 508 U.S. 49, 56 (1993). Thus, it is undisputed that the doctrine is rooted in fundamental rights and protects these rights by preventing these activities from being declared illegal.

The shifting of attorney's fees does not impact the rights to political activity or to petition the government, nor does it declare such activity to be illegal. If it did, all fee shifting powers of the court would only be available when the litigation is shown to be a sham.[28] The only impact fee shifting has on First

---

[28] *E.g.*, F.R.C.P. Rule 11; F.R.C.P Rule 37; 28 U.S.C. § 1927; F.R.A.P. 38; and the inherent powers of the court.

Amendment rights is to increase the costs of those rights, and this court has held that cost is not a factor in First Amendment considerations. *Citizens United v. FEC*, 558 U.S. 310, 350 (2009). Section 285 has no relation to the concerns and interests that brought about the Noerr-Pennington doctrine.

The adoption of the ruling in *Professional Real Estate* by the Federal Circuit in *Brooks* was an improper misapplication of an unrelated law. The Noerr-Pennington doctrine and the sham litigation exception represent a careful balancing of competing fundamental interests. The fact that this balancing was difficult is apparent in Justice Steven's concurrence in judgment which states "I would not, however, use this easy case as a vehicle for announcing a rule that may govern the decision of difficult cases, some of which may involve abuse of the judicial process." *Prof'l Real Estate Investors*, *supra*, at 76. When fundamental rights are not at stake the balance clearly weighs in favor of the Congressional intent for district court judges to have discretion to award attorney's fees in exceptional cases.

CONCLUSION

Because of the clear disregard for legislative intent, the immediate harm to end users and consumers, and the pervasive effect the Federal Circuit's ruling will have encouraging meritless patent suits, the judgment of the Court of Appeals should be reversed.

Respectfully submitted,

ERIK LIEBERMAN
FOOD MARKETING INSTITUTE
2345 Crystal Drive
Suite 800
Arlington, VA 22202
(202) 452-8884

DAVID A. BALTO
Counsel of Record
MATTHEW C. LANE
LAW OFFICES OF DAVID A. BALTO
1325 G Street, NW
Suite 500
Washington, DC 20005
(202) 789-5424
david.balto@yahoo.com

AMICUS CURIAE BRIEF

RECORD
AND
BRIEFS

Supreme Court, U.S.
FILED
DEC 9 - 2013
OFFICE OF THE CLERK

Nos. 12-1163 & 12-1184

In the
Supreme Court of the United States

HIGHMARK INC.,
Petitioner,
v.
ALLCARE HEALTH MANAGEMENT SYSTEMS, INC.,
Respondent.

OCTANE FITNESS, LLC,
Petitioner,
v.
ICON HEALTH & FITNESS, INC.,
Respondent.

On Writs of Certiorari to the United States Court of Appeals for the Federal Circuit

BRIEF FOR *AMICI CURIAE* GOOGLE INC., CISCO SYSTEMS, INC., FACEBOOK, INC., HTC CORP., INTEL CORPORATION, LINKEDIN CORP., MOTOROLA MOBILITY LLC, NETFLIX, NEWEGG INC., RACKSPACE HOSTING, INC., SALESFORCE.COM, INC., T-MOBILE USA, INC., VERIZON COMMUNICATIONS INC., AND VIZIO, INC., IN SUPPORT OF NEITHER PARTY

PAUL D. CLEMENT
Counsel of Record
D. ZACHARY HUDSON
BANCROFT PLLC
1919 M Street NW, Suite 470
Washington, DC 20036
(202) 234-0090
pclement@bancroftpllc.com
Counsel for Amici Curiae

December 9, 2013

Library of Congress
Law Library

CORPORATE DISCLOSURE STATEMENT

Google Inc. has no parent corporation and no publicly traded corporation owns 10% or more of its stock.

Cisco Systems, Inc. has no parent corporation and no publicly traded corporation owns 10% or more of its stock.

Facebook, Inc. has no parent corporation and no publicly traded corporation owns 10% or more of its stock.

HTC Corp. has no parent corporation and no publicly traded corporation owns 10% or more of its stock.

Intel Corporation has no parent corporation and no publicly traded corporation owns 10% or more of its stock.

LinkedIn Corp. has no parent corporation and no publicly traded corporation owns 10% or more of its stock.

Motorola Mobility LLC is owned by Google Inc.

Netflix has no parent corporation and no publicly traded corporation owns 10% or more of its stock.

Newegg Inc. has no parent corporation and no publicly traded corporation owns 10% or more of its stock.

Rackspace Hosting, Inc. has no parent corporation and no publicly traded corporation owns 10% or more of its stock.

salesforce.com, inc. has no parent corporation and no publicly traded corporation owns 10% or more of its stock.

T-Mobile USA, Inc. is a wholly-owned subsidiary of T-Mobile US, Inc. T-Mobile Global Holding GmbH ("Holding"), a German entity, owns more than 10% of T-Mobile US's shares, which are publicly traded. Holding is a wholly-owned subsidiary of T-Mobile Global Zwischenholding GmbH ("Global"), a German entity. Global is a wholly-owned subsidiary of Deutsche Telekom AG, a German entity.

Verizon Communications Inc. has no parent corporation and no publicly traded corporation owns 10% or more of its stock.

VIZIO, Inc. has no parent corporation and the only publicly held company that owns 10% or more of VIZIO's stock is AmTRAN Technology Co., Ltd.

TABLE OF CONTENTS

CORPORATE DISCLOSURE STATEMENT i
TABLE OF AUTHORITIES iv
STATEMENT OF INTEREST 1
SUMMARY OF ARGUMENT 1
ARGUMENT 4
I. The Federal Circuit Has Made It Far Too Difficult For Alleged Infringers To Recover Attorneys' Fees In Exceptional Cases. 4
A. Federal Circuit Precedent Unduly Limits the Universe of Exceptional Cases 6
B. Subjective Bad Faith and Objective Unreasonableness Each Provide Independent Grounds for an Exceptional Case Finding 10
C. Current Federal Circuit Case Law Tips the Scales in Favor of Patentees, Ignoring the Text of § 285 and This Court's Precedent. 15
D. Federal Circuit § 285 Precedent Encourages Frivolous Patent Litigation. .. 18
II. When An Exceptional Case Determination Is Based On The Objective Reasonableness Of A Claim Or Defense, That Determination Is A Question Of Law Reviewable *De Novo* 21
III. The Standard Of Review This Court Adopts For Exceptional Case Determinations Should Not Impact The Standard Of Review For Willful Infringement Findings. 29
CONCLUSION 33

TABLE OF AUTHORITIES

Cases

ADM Corp. v. Speedmaster Packaging Corp.,
525 F.2d 662 (3d Cir. 1975) 14

Bard Peripheral Vascular, Inc.
v. W.L. Gore & Assocs., Inc.,
670 F.3d 1171 (Fed. Cir. 2012) 27, 33

Bard Peripheral Vascular, Inc.
v. W.L. Gore & Assocs., Inc.,
682 F.3d 1003 (Fed. Cir. 2012) 30, 31

Bill Johnson's Rests., Inc. v. NLRB,
461 U.S. 731 (1983) 12

Bridgeport Music, Inc.
v. Rhyme Syndicate Music,
376 F.3d 615 (6th Cir. 2004) 13

Bridgeport Music, Inc. v. WB Music Corp.,
520 F.3d 588 (6th Cir. 2008) 9

Bridgmon v. Array Sys. Corp.,
325 F.3d 572 (5th Cir. 2003) 13

Brooks Furniture Mfg., Inc.
v. Dutailier Int'l, Inc.,
393 F.3d 1378 (Fed. Cir. 2005) 4, 5, 22, 28

Champion v. Outlook Nashville, Inc.,
380 F.3d 893 (6th Cir. 2004) 24

Christianburg Garment Co. v. EEOC,
434 U.S. 412 (1978) 11

Cloaninger ex rel. Estate of Cloaninger
v. McDevitt,
555 F.3d 324 (4th Cir. 2009) 24

Colortronic Reinhard & Co., K.G. v. Plastic Controls, Inc., 668 F.2d 1 (1st Cir. 1981) 14

Colston v. Barnhart, 146 F.3d 282 (5th Cir. 1998) 24

Cooter & Gell v. Hartmax Corp., 496 U.S. 384 (1990) 28, 29

Curley v. Klem, 499 F.3d 199 (3d Cir. 2007) 24

Cybor Corp. v. FAS Techs., Inc., 138 F.3d 1448 (Fed. Cir. 1998) 23

Deyerle v. Wright Mfg. Co., 496 F.2d 45 (6th Cir. 1974) 15

Diamond Star Bldg. Corp. v. Freed, 30 F.3d 503 (4th Cir. 1994) 13, 25

Dominant Semiconductors Sdn. Bhd. v. OSRAM GmbH, 524 F.3d 1254 (Fed. Cir. 2008) 16

DuBuit v. Harwell Enters., Inc., 540 F.2d 690 (4th Cir. 1976) 14

E. R.R. Presidents Conference v. Noerr Motor Freight, Inc., 365 U.S. 127 (1961) 12

eBay Inc. v. MercExchange, L.L.C., 547 U.S. 388 (2006) 11, 18, 25

Engleman v. Deputy Murray, 546 F.3d 944 (8th Cir. 2008) 24

Eon-Net LP v. Flagstar Bancorp., 653 F.3d 1314 (Fed. Cir. 2011) 5, 6, 10

Eudy
v. Motor-Guide, Herschede Hall Clock Co.,
651 F.2d 299 (5th Cir. 1981) 15

F.D. Rich Co.
v. United States ex rel. Indus. Lumber Co.,
417 U.S. 116 (1974) 11, 32

FM Indus., Inc. v. Citicorp Credit Servs., Inc.,
614 F.3d 335 (7th Cir. 2010) 8

Fogerty v. Fantasy, Inc.,
510 U.S. 517 (1994) ..... *passim*

Forest Labs., Inc. v. Abbott Labs.,
339 F.3d 1324 (Fed. Cir. 2003) 22

Fox Film Corp. v. Doyal,
286 U.S. 123 (1932) 7

García-Goyco
v. Law Envtl. Consultants, Inc.,
428 F.3d 14 (1st Cir. 2005) 13

Gonzales v. Duran,
590 F.3d 855 (10th Cir. 2009) 24

Halliburton Co. v. Dow Chem. Co.,
514 F.2d 377 (10th Cir. 1975) 15

Hensley v. Eckerhart,
461 U.S. 424 (1983) 6

i4i Ltd. P'ship v. Microsoft Corp.,
598 F.3d 831 (Fed. Cir. 2010) 27

ICU Med., Inc. v. Alaris Med. Sys., Inc.,
558 F.3d 1368 (Fed. Cir. 2009) 27

iLor, LLC v. Google, Inc.,
631 F.3d 1372 (Fed. Cir. 2011) 31

In re Seagate Tech., LLC,
497 F.3d 1360 (Fed. Cir. 2007) 30

JCW Invs., Inc. v. Novelty, Inc.,
509 F.3d 339 (7th Cir. 2007) 13, 14

Johnson v. City of Fort Lauderdale, Fla.,
126 F.3d 1372 (11th Cir. 1997) 24

Kahn v. Dynamics Corp. of Am.,
508 F.2d 939 (2d Cir. 1974) 14

Latin Am. Music Co. v. Am. Soc'y of Composers, Authors & Publishers (ASCAP),
629 F.3d 262 (1st Cir. 2010) 14

Lazare Kaplan Int'l, Inc. v. Photoscribe Techs., Inc.,
628 F.3d 1359 (Fed. Cir. 2010) 27

Lennon v. Miller,
66 F.3d 416 (2d Cir. 1995) 24

Lieb v. Topstone Indus., Inc.,
788 F.2d 151 (3d Cir. 1986) 6, 13, 18, 25

Lighting Ballast Control LLC v. Philips Elecs. N. Am. Corp.,
500 F. App'x 951 (Fed. Cir. 2013) 23

Loctite Corp. v. Fel-Pro, Inc.,
667 F.2d 577 (7th Cir. 1981) 15

MarcTec, LLC v. Johnson & Johnson,
664 F.3d 907 (Fed. Cir. 2012) 16, 17, 27

Markman v. Westview Instruments, Inc.,
517 U.S. 370 (1996) 29

Mary Ellen Enters., Inc. v. Camex, Inc.,
68 F.3d 1065 (8th Cir. 1995) 14

Matthew Bender & Co. v. W. Publ'g Co.,
240 F.3d 116 (2d Cir. 2001) 13

Maurice A. Garbell, Inc. v. Boeing Co.,
546 F.2d 297 (9th Cir. 1976) 15

Medtronic Navigation, Inc. v. BrainLAB Medizinische Computersysteme GmbH,
603 F.3d 943 (Fed. Cir. 2010) 16

Merck & Co. v. Teva Pharm. USA, Inc.,
395 F.3d 1364 (Fed. Cir. 2005) 23

Messerschmidt v. Millender,
132 S. Ct. 1235 (2012) 24

Meyer Intellectual Props. Ltd. v. Bodum, Inc.,
690 F.3d 1354 (Fed. Cir. 2012) 27

Miller v. Fenton,
474 U.S. 104 (1985) 26

MiTek Holdings, Inc. v. Arce Eng'g Co.,
198 F.3d 840 (11th Cir. 1999) 14

Monolithic Power Sys., Inc. v. O2 Micro Int'l Ltd.,
726 F.2d 1359 (Fed. Cir. 2013) 27

Old Reliable Wholesale, Inc. v. Cornell Corp.,
635 F.3d 539 (Fed. Cir. 2011) 5, 10

Palladium Music, Inc. v. EatSleepMusic, Inc.,
398 F.3d 1193 (10th Cir. 2005) 14

Pearson v. Callahan,
555 U.S. 223 (2009) 24

Perfect 10, Inc. v. CCBill LLC,
488 F.3d 1102 (9th Cir. 2007) 14

Pierce v. Underwood,
487 U.S. 552 (1988) 25, 26, 33

Pitt v. District of Columbia,
491 F.3d 494 (D.C. Cir. 2007) 24

Positive Black Talk Inc.
v. Cash Money Records Inc.,
394 F.3d 357 (5th Cir. 2004) 9

Powell v. Home Depot U.S.A., Inc.,
663 F.3d 1221 (Fed. Cir. 2011) 27

Prof'l Real Estate Investors, Inc.
v. Columbia Pictures Indus., Inc.,
508 U.S. 49 (1993) 11, 12, 25

Raylon, LLC
v. Complus Data Innovations, Inc.,
700 F.3d 1361 (Fed. Cir. 2012) 33

Riccardo v. Rausch,
375 F.3d 521 (7th Cir. 2004) 24

Rodriguez
v. Maricopa Cnty. Comty. Coll. Dist.,
605 F.3d 703 (9th Cir. 2010) 24

Rosciszewski v. Arete Assocs., Inc.,
1 F.3d 225 (4th Cir. 1993) 14

Scott v. Harris,
550 U.S. 372 (2007) 24

Sitrick v. Dreamworks, LLC,
516 F.3d 993 (Fed. Cir. 2008) 23

Slip Track Sys., Inc. v. Metal-Lite, Inc.,
304 F.3d 1256 (Fed. Cir. 2002) 23

Sony Corp. of Am.
v. Universal City Studios, Inc.
464 U.S. 417 (1984) 7

Square Liner 360°, Inc. v. Chisum,
691 F.2d 362 (8th Cir. 1982) 15

Takeda Chem. Indus., Ltd. v. Mylan Labs, Inc.,
549 F.3d 1381 (Fed. Cir. 2008) 27

The Appollon,
22 U.S. 362 (1824) 11

United States v. Garzon,
119 F.3d 1446 (10th Cir. 1997) 25

United States v. Nerber,
222 F.3d 597 (9th Cir. 2000) 25

United States v. Paramount Pictures, Inc.,
334 U.S. 131 (1948) 7

United States v. Welliver,
976 F.2d 1148 (8th Cir. 1992) 25

Vaughan v. Atkinson,
369 U.S. 527 (1962) 11, 32

Wedgetail Ltd. v. Huddleston Deluxe, Inc.,
576 F.3d 1302 (Fed. Cir. 2009) 22

Wheaton and Donaldson v. Peters & Grigg,
33 U.S. 591 (1834) 7

Wilson v. City of Boston,
421 F.3d 45 (1st Cir. 2005) 24

Young v. Lumenis, Inc.,
492 F.3d 1336 (Fed. Cir. 2007) 23

Constitutional Provision & Statutes

U.S. Const. art. 1, § 8, cl. 8 7

17 U.S.C. § 505 6

35 U.S.C. § 284 30

35 U.S.C. § 285 ..... *passim*

Other Authorities

John R. Allison et al., *Patent Quality and Settlement Among Repeat Patent Litigants*, 99 Geo. L.J. 677 (2011) 20

Colleen Chien, *Patent Trolls by the Numbers*, Patently-O (Mar. 14, 2013), http://www.patentlyo.com/patent/2013/03/chien-patent-trolls.html 19

Colleen Chien, *Startups and Patent Trolls*, Santa Clara Law Digital Commons (2012) 20

Executive Office of the President, *Patent Assertion and U.S. Innovation* (June 4, 2013) 20, 21

Google, BlackBerry, Earthlink & Red Hat, *Comments to the Federal Trade Commission and U.S. Department of Justice on Patent Assertion Entities* (Apr. 5, 2013) 21

Sara Jeruss et al., *The AIA 500 Expanded: The Effects of Patent Monetization Entities* (UC Hastings Research Paper No. 45, 2013) 18

Sara Jeruss et al., *The America Invents Act 500: Effects of Patent Monetization Entities on US Litigation*, 11 Duke L. & Tech. Rev. 357 (2012) 20

Litigations Over Time, PatentFreedom.com (Aug. 6, 2013), https://www.patentfreedom.com/about-npes/litigations/ 19

Ranganath Sudarshan, *Nuisance-Value Patent Suits: An Economic Model and Proposal*, 25 Santa Clara Computer & High Tech L.J. 159 (2008) 20

Trends in Awards of Attorneys' Fees under 35 U.S.C. § 285 between 2003-2005 and 2010-2012, LexMachina.com (Dec. 9, 2013), https://lexmachina.com/2013/12/trends-in-awards-of-attorneys-fees-under-35-u-s-c-%C2%A7-285-between-2003-2005-and-2010-2012/ 15, 16

U.S. Gov't Accountability Office, GAO-13-465, Intellectual Property: Assessing Factors That Affect Patent Infringement Litigation Could Help Improve Patent Quality (2013), http://www.gao.gov/assets/660/657103.pdf 19

STATEMENT OF INTEREST[1]

Amici Google, Cisco Systems, Facebook, HTC, Intel, LinkedIn, Motorola Mobility, Netflix, Newegg, Rackspace, salesforce.com, T-Mobile, Verizon, and Vizio are leading providers of high-technology products and services and leaders in their respective fields. Having obtained patents based on their own research and development efforts, and also having spent considerable resources defending themselves against hundreds of meritless infringement claims, *amici* support a balanced patent system that discourages both infringement and meritless allegations of infringement. *Amici* believe that a construction of 35 U.S.C. § 285 that allows alleged infringers to recover fees when patentees abuse the patent system and make unwarranted infringement allegations, and a standard of review in § 285 cases that appropriately distinguishes between questions of law and fact, is critical to that balance.

SUMMARY OF ARGUMENT

Congress provided broad authority to courts to award attorneys' fees in "exceptional cases." 35 U.S.C. § 285. Despite that broad authorization, the Federal Circuit has created limits on fees and pro-plaintiff presumptions that have no basis in the statutory text. While the Federal Circuit has

---

[1] Pursuant to Supreme Court Rule 37.6, *amici curiae* state that no counsel for any party authored this brief in whole or in part and that no entity or person, aside from *amici curiae* and their counsel, made any monetary contribution toward the preparation or submission of this brief. Pursuant to Supreme Court Rule 37.3, counsel of record for all parties have consented to this filing in letters on file with the Clerk's office.

correctly recognized that an exceptional case finding may be appropriate under a variety of circumstances, it has purported to limit fees to "only" those circumstances it has identified and refused to assess a patentee's conduct as a whole when conducting exceptional case analysis. In particular, the Federal Circuit has required *both* subjective bad faith *and* objectively unreasonable infringement allegations before awarding attorneys' fees against patentees absent fraud or litigation misconduct. Subjective bad faith, of course, is notoriously difficult to prove. Worse still, the Federal Circuit has adopted a presumption that patentees allege infringement in good faith without a countervailing presumption that alleged infringers defend patent cases in good faith. And, in some cases, that court has applied a standard for objective unreasonableness that is almost impossible to meet. The combined effect of these rules is to put a thumb on the scale in favor of patentees despite Congress' decision to make attorneys' fees equally available to prevailing plaintiffs and defendants.

In addressing the question presented in *Octane Fitness v. Icon Health and Fitness*, No. 12-1184, this Court should correct these errors. This Court should make clear that there is not an exclusive list of factors that can make a case exceptional under § 285. The factors identified by the Federal Circuit to date—including factors such as fraud in procuring the patent, lodging frivolous filings, conduct violating Rule 11, bringing a claim in subjective bad faith, and advancing objectively baseless legal theories—are appropriately viewed as a list of nonexhaustive factors, which may be supplemented in future cases,

that can each provide an independent basis for an exceptional case finding. Along the same lines, this Court should underscore that when no individual factor by itself supports an exceptional case finding, these factors should be considered together and not treated as silos that trigger fees only if at least one is filled to the top. Cases that are not exceptional based on only one of these factors may nonetheless be exceptional when considered in light of a party's overall conduct. Relatedly, this Court should reject the Federal Circuit's insistence that fees are appropriate only when both subjective bad faith and objective unreasonableness are shown, and make clear that a patentee should not benefit from a presumption of good faith when fees are at issue, or a test for objective unreasonableness that insulates patentees from any risk of fees for pursuing meritless claims. Providing guidance of this sort to the Federal Circuit will not only bring § 285 case law in closer alignment with this Court's precedents, but also deter some of the worst practices of patent assertion entities.

Separate from the question of the appropriate standard for making an exceptional case finding, in answering the question presented in *Highmark Inc. v. Allcare Management Systems, Inc.*, No. 12-1163, this Court should hold that when an exceptional case determination turns on the objective reasonableness of a claim of alleged infringement or a defense to infringement, the district court's conclusion regarding that objective factor involves consideration of a question of law subject to *de novo* review. Particularly in light of the treatment of objective determinations in other areas of law, there is a

fundamental disconnect between an objective standard and deferential review. As long as objective unreasonableness is a component of the § 285 standard for awarding fees, that objective component should be reviewed *de novo*.

Finally, if this Court holds that all aspects of a § 285 fee determination—including objective reasonableness—are to be reviewed under a deferential standard, it should make clear that its conclusion does not extend to the separate and important standard of review for assessing willful infringement. The Federal Circuit has recently clarified that the objective component of the willfulness determination is reviewed *de novo*. If this Court were to find that all aspects of attorneys' fee awards are reviewed deferentially, it should make clear that its conclusion depends on factors unique to the attorneys' fees context, and would not extend to other contexts.

ARGUMENT

I. The Federal Circuit Has Made It Far Too Difficult For Alleged Infringers To Recover Attorneys' Fees In Exceptional Cases.

Section 285 provides that "[t]he court in exceptional cases may award reasonable attorney fees to the prevailing party." 35 U.S.C. § 285. Elaborating that standard, the Federal Circuit has developed a list of circumstances that can warrant an exceptional case finding. "[F]raud or inequitable conduct in procuring the patent" can justify such a finding. *Brooks Furniture Mfg., Inc. v. Dutailier Int'l, Inc.*, 393 F.3d 1378, 1381 (Fed. Cir. 2005). "[L]odging frivolous filings and engaging in vexatious or

unjustified litigation" can also make a case exceptional, *Eon-Net LP v. Flagstar Bancorp.*, 653 F.3d 1314, 1324 (Fed. Cir. 2011), as can unethical or unprofessional conduct, violations of Rule 11, or willful infringement. *See Brooks*, 393 F.3d at 1381; *Old Reliable Wholesale, Inc. v. Cornell Corp.*, 635 F.3d 539, 543-44 (Fed. Cir. 2011). Nonetheless, the Federal Circuit has artificially narrowed the circumstances in which fees may be awarded. "Absent litigation misconduct or misconduct in securing the patent, sanctions under § 285 may be imposed against the patentee *only* if *both* (1) the patentee brought the litigation in bad faith; *and* (2) the litigation is objectively baseless." *Eon-Net LP*, 653 F.3d at 1324 (emphasis added).

There is no basis for this artificial constriction of the circumstances in which fees may be awarded to prevailing parties in exceptional cases, nor anything to suggest that the Federal Circuit has exhaustively identified all the circumstances in which fees are appropriate. Nor is there any statutory basis for requiring both subjective bad faith and objective unreasonableness. The Federal Circuit has combined this narrowed view of § 285 with presumptions and legal tests that make it very difficult to hold a patentee responsible for the substantial attorneys' fees necessitated by infringement assertions that are as aggressive as they are meritless. This Court needs to even the scales and deter unjustified patent assertions and defenses alike.

A. Federal Circuit Precedent Unduly Limits the Universe of Exceptional Cases.

There is no justification in the text of § 285 or relevant precedent for limiting the constellation of exceptional cases to "only" those circumstances already identified by the Federal Circuit. *Eon-Net LP*, 653 F.3d at 1324. This Court effectively recognized as much in addressing the closely analogous attorneys' fees provision in the Copyright Act. In *Fogerty v. Fantasy, Inc.*, 510 U.S. 517 (1994), this Court defined the scope of 17 U.S.C. § 505, which states that "the court may ... award a reasonable attorney's fee to the prevailing party as part of the costs" in copyright infringement cases. In doing so, the Court held that "'[t]here is no precise rule or formula for making these determinations,' but instead equitable discretion should be exercised 'in light of the considerations we have identified.'" *Fogerty*, 510 U.S. at 534 (quoting *Hensley v. Eckerhart*, 461 U.S. 424, 436-37 (1983)). The Court then noted with approval a list of "nonexclusive factors to guide courts' discretion," including "'frivolousness, motivation, objective unreasonableness (both in the factual and in the legal components of the case) and the need in particular circumstances to advance considerations of compensation and deterrence.'" *Id.* at 534 n.19 (quoting *Lieb v. Topstone Indus., Inc.*, 788 F.2d 151, 156 (3d Cir. 1986)).

Fogerty's warning that "'[t]here is no precise rule or formula for making'" attorneys' fees determinations in copyright cases, and blessing of a

list of "nonexclusive factors," *id.* at 534 & n.19, should inform the proper approach to fees under the Patent Act. *Fogerty* itself pointed out "that the federal fee-shifting statutes" in the patent and copyright fields are "closely related" and noted that the Patent Act "contain[s] language similar to that of § 505, with the added proviso that fees are only to be awarded in 'exceptional cases.'" *Id.* at 525 n.12. Even apart from the similarity in the underlying statutory text, *Fogerty*'s guidance is clearly relevant. Congress regulates copyrights and patents pursuant to the same source of constitutional authority—its mandate to "promote the Progress of Science and the useful Arts, by securing for limited Times to Authors and Inventors the exclusive Right to their respective Writings and Discoveries." U.S. Const. art. 1, § 8, cl. 8. Although the two bodies of law are "not identical twins," it is often appropriate to apply copyright doctrine in the patent context and vice versa because of the constitutional and "historic kinship between patent law and copyright law." *Sony Corp. of Am. v. Universal City Studios, Inc.* 464 U.S. 417, 439 & n.19 (1984); *see United States v. Paramount Pictures, Inc.*, 334 U.S. 131, 158 (1948); *Fox Film Corp. v. Doyal*, 286 U.S. 123, 131 (1932); *Wheaton and Donaldson v. Peters & Grigg*, 33 U.S. 591, 657-58 (1834).

Accordingly, this Court should make clear that "'[t]here is no precise rule or formula for'" determining whether a case is exceptional under § 285. *Fogerty*, 510 U.S. at 534. Nothing in § 285's text limits the circumstances under which a case may be found exceptional. The factors that the Federal Circuit has identified to date—fraud or inequitable conduct in procuring the patent, lodging frivolous

filings and engaging in vexatious and unjustified litigation, conduct violating Rule 11, willful infringement, bringing a claim in subjective bad faith, and advancing objectively baseless legal theories—are useful as a list of "nonexclusive factors." *Id.* at 534 & n.19. But the Federal Circuit is wrong to suggest that those factors exhaustively cover the proverbial waterfront. Additional factors identified in copyright cases, but not by the Federal Circuit—such as "advanc[ing] considerations of compensation and deterrence," *id.*—may be germane to exceptional case deliberations in a specific patent case. And there is also room for the consideration of other factors, such as continuing to pursue infringement allegations after the lack of merit has become apparent, opposing a litigation stay pending review of the patents-in-suit by the Patent Office, or making an outrageous damages demand that infects the framing and conduct (and unnecessarily increases the costs) of the litigation. *C.f. FM Indus., Inc. v. Citicorp Credit Servs., Inc.*, 614 F.3d 335, 340 (7th Cir. 2010) (concluding that a $15 billion damages demand in a copyright case, "a stupendous figure that led defendants to generate far more paper, and endure higher legal bills, than any plausible claim would have warranted" "richly deserve[d] the label vexatious").

To be sure, circumstances of this sort could be characterized as individual species of bad faith or litigation misconduct (although courts generally have not viewed them as such) and thus could be shoehorned under existing Federal Circuit precedent. But reminding the Federal Circuit that limiting the attributes that can make a case exceptional is

inconsistent with the relevant statutory language and this Court's precedent will ensure that such cases are not deemed unexceptional simply because they do not neatly fall within one of the Federal Circuit's pre-defined categories.[2]

By the same token, this Court should stress that when none of the factors identified by the Federal Circuit supports an exceptional case finding on its own, those factors—and whatever other factors might be relevant in a given case—should be analyzed in concert, not as mutually exclusive and collectively exhaustive factors. There is a real danger that in applying existing Federal Circuit precedent, district courts will focus on individual strands of exceptional case precedent and miss a pattern of misconduct rendering the case as a whole exceptional. A

---

[2] *Amici*'s discussion of copyright precedent is not meant to suggest that the standards for awarding fees in copyright and patent cases should be identical. As this Court recognized in *Fogerty*, the relevant provisions of the Copyright and Patent Acts use different language, and that textual difference may warrant a different substantive standard. For example, some courts have held that "[t]he grant of fees and costs 'is the rule rather than the exception'" in copyright cases, and that attorneys' fees "'should be awarded routinely.'" *Bridgeport Music, Inc. v. WB Music Corp.*, 520 F.3d 588, 592 (6th Cir. 2008) (quoting *Positive Black Talk Inc. v. Cash Money Records Inc.*, 394 F.3d 357, 380 (5th Cir. 2004)). Such a presumption, even if appropriate in copyright cases, may be inconsistent with § 285's "exceptional case" language. But this Court's observations that "'[t]here is no precise rule or formula for'" awarding such fees, *Fogerty*, 510 U.S. at 534, that the use of a list of "nonexclusive factors" is appropriate, *id.* at 534 n.19, and (as discussed *infra*) that "[p]revailing plaintiffs and prevailing defendants are to be treated alike," *id.* at 534—should inform the standard for awarding attorneys' fees under § 285.

litigant's conduct in procuring a patent should not be viewed as hermetically sealed off from a litigant's bad faith, vexatious litigation practices, or unreasonable legal theories. It may be that, in a given case, none of the individual factors identified by the Federal Circuit considered in isolation makes a case exceptional, but that the factors considered in total make the exceptional nature of the case clear.

B. Subjective Bad Faith and Objective Unreasonableness Each Provide Independent Grounds for an Exceptional Case Finding.

Not only has the Federal Circuit adopted a siloed and circumscribed view of the relevant exceptional case factors, it has held that two of those factors must both be present before either can support an exceptional case finding. *See, e.g.*, *Eon-Net LP*, 653 F.3d at 1324 ("sanctions under § 285 may be imposed against the patentee only if *both* (1) the patentee brought the litigation in bad faith; *and* (2) the litigation is objectively baseless" (emphasis added)). The Federal Circuit has unequivocally stated that "subjective considerations of bad faith are irrelevant if the challenged claims or defenses are not objectively baseless," and that objective unreasonableness without subjective bad faith is similarly insufficient. *Old Reliable*, 635 F.3d at 547 n.4. There is no basis in precedent, statutory text, or common sense for this rule.

The Federal Circuit's conclusion that "subjective considerations of bad faith" cannot alone support an award of attorneys' fees is irreconcilable with this Court's case law, not to mention nearly two centuries

of legal practice. Even apart from a statutory fee-shifting provision like § 285, this Court has "long recognized that attorneys' fees may be awarded to a successful party when his opponent has acted in bad faith." *F.D. Rich Co. v. United States ex rel. Indus. Lumber Co.*, 417 U.S. 116, 129 (1974) (citing *Vaughan v. Atkinson*, 369 U.S. 527, 530 (1962) (describing the "allowance of counsel fees" as "part of the historic equity jurisdiction of the federal courts" (citing *The Appollon*, 22 U.S. 362, 379 (1824)))); *Christianburg Garment Co. v. EEOC*, 434 U.S. 412, 419 (1978) ("under the American common-law rule attorney's fees may be awarded against a party who has proceeded in bad faith"). This Court underscored in *eBay* that patent law is not a breed apart; bedrock equitable principles apply with the same "force to disputes arising under the Patent Act" as they do to all other disputes. *eBay Inc. v. MercExchange, L.L.C.*, 547 U.S. 388, 391 (2006).

A statutory fee-shifting provision, like § 285, expands the authority to shift fees; it can hardly be read to restrict the historic authority of courts to award fees for bad faith conduct. There is certainly nothing in § 285's text that so much as hints that an exceptionally egregious instance of bad faith would not render a case "exceptional."

It is no surprise then that the Federal Circuit did not derive its conjunctive test from § 285's text. Instead, the Federal Circuit borrowed the standard from this Court's decision in *Professional Real Estate Investors, Inc. v. Columbia Pictures Industries, Inc.*, 508 U.S. 49 (1993) ("*PRE*"), addressing the scope of the "sham" exception to the doctrine of antitrust

immunity. In *PRE*, this Court held that a cause of action had to be both objectively baseless and brought in subjective bad faith for the sham exception to apply. *See id.* at 57. But that demanding standard reflects both the important First Amendment interests at stake in petitioning the government "'with respect to the passage or enforcement of laws,'" and the distinct chilling effect of treble damages. *Id.* at 58 (quoting *E. R.R. Presidents Conference v. Noerr Motor Freight, Inc.*, 365 U.S. 127, 139 (1961)). Neither concern translates to this context. The broader First Amendment concerns implicated by efforts to make petitioning activity part and parcel of an antitrust conspiracy are not triggered by ordinary bad faith litigation. *See, e.g., Bill Johnson's Rests., Inc. v. NLRB*, 461 U.S. 731, 743 (1983) ("baseless litigation is not immunized by the First Amendment right to petition"). And the prospect of paying attorneys' fees directly traceable to bad faith or objectively unreasonable legal theories has nothing like the chilling effect associated with treble damages.

In all events, the Federal Circuit's conjunctive standard has little to recommend it as a matter of common sense. While courts sometimes favor an objective test to avoid difficult inquiries into subjective bad faith, the Federal Circuit's conjunctive test requires such a subjective inquiry even when an objective test is readily satisfied. Conversely, in a case where a court can make a finding of subjective bad faith, no public policy supports withholding attorneys' fees if the underlying claims are very weak without crossing the threshold into objective unreasonableness. Indeed, a case of extreme bad

faith and very weak but not quite objectively unreasonable claims may be more deserving of attorneys' fees than a case that involves less egregious bad faith and objectively unreasonable claims. The Federal Circuit's conjunctive test heavily skews the inquiry against awarding fees in favor of the prevailing defendant falsely accused of infringement. While such a skewed test makes sense in a context like *PRE*, it is a complete misfit for a facially-neutral attorneys' fees provision designed to shift fees to prevailing plaintiffs and defendants alike.

A disjunctive consideration of subjective bad faith and objective unreasonableness as potentially independent bases for fee-shifting is consistent with the copyright rule and pre-Federal Circuit patent precedent. While the factors considered in awarding attorneys' fees in copyright cases vary somewhat from Circuit to Circuit, the courts of appeals uniformly recognize "objective unreasonableness" as to the "legal components of the case" as a factor that can justify the grant of attorneys' fees. *Lieb*, 788 F.2d at 156; *see, e.g.*, *García–Goyco v. Law Envtl. Consultants, Inc.*, 428 F.3d 14, 20 (1st Cir. 2005) ("'objectively weak'" claims can support an award of fees); *Matthew Bender & Co. v. W. Publ'g Co.*, 240 F.3d 116, 121 (2d Cir. 2001) ("'objective unreasonableness'" supports an award of fees); *Diamond Star Bldg. Corp. v. Freed*, 30 F.3d 503, 506 (4th Cir. 1994) (same); *Bridgmon v. Array Sys. Corp.*, 325 F.3d 572, 578 n.9 (5th Cir. 2003) (same); *Bridgeport Music, Inc. v. Rhyme Syndicate Music*, 376 F.3d 615, 626 (6th Cir. 2004) (same); *JCW Invs., Inc. v. Novelty, Inc.*, 509 F.3d 339, 342 (7th Cir. 2007)

(same); *Mary Ellen Enters., Inc. v. Camex, Inc.*, 68 F.3d 1065, 1072 (8th Cir. 1995) (same); *Perfect 10, Inc. v. CCBill LLC*, 488 F.3d 1102, 1120 (9th Cir. 2007) (same); *Palladium Music, Inc. v. EatSleepMusic, Inc.*, 398 F.3d 1193, 1200 (10th Cir. 2005) (same); *MiTek Holdings, Inc. v. Arce Eng'g Co.*, 198 F.3d 840, 842 (11th Cir. 1999) (same). This Court cited that same factor with approval in *Fogerty*. *See* 510 U.S. at 534 n.19. And these courts make no mention of a concomitant bad faith requirement. In fact, many of them expressly disclaim such a requirement. *See, e.g., Latin Am. Music Co. v. Am. Soc'y of Composers, Authors & Publishers (ASCAP)*, 629 F.3d 262, 263 (1st Cir. 2010) (showing of "bad faith is not required"); *Rosciszewski v. Arete Assocs., Inc.*, 1 F.3d 225, 234 (4th Cir. 1993) (absence of "bad faith" not dispositive); *JCW Invs.*, 509 F.3d at 342 (showing of "bad faith is not required"); *MiTek Holdings*, 198 F.3d at 842 (same).

Pre-Federal Circuit § 285 precedent likewise recognized that bad faith alone can support an award of fees. *See, e.g., Colortronic Reinhard & Co., K.G. v. Plastic Controls, Inc.*, 668 F.2d 1, 8 (1st Cir. 1981) ("Attorneys' fees are normally awarded under section 285" where there is "strong evidence of ... bad faith on the part of the losing party."); *Kahn v. Dynamics Corp. of Am.*, 508 F.2d 939, 942 (2d Cir. 1974) (litigating in "bad faith" can support an exceptional case finding); *ADM Corp. v. Speedmaster Packaging Corp.*, 525 F.2d 662, 664 (3d Cir. 1975) (same); *DuBuit v. Harwell Enters., Inc.*, 540 F.2d 690, 694 (4th Cir. 1976) (same); *Eudy v. Motor-Guide, Herschede Hall Clock Co.*, 651 F.2d 299, 305-06 (5th

Cir. 1981) (same); *Deyerle v. Wright Mfg. Co.*, 496 F.2d 45, 54-55 (6th Cir. 1974) (same); *Loctite Corp. v. Fel-Pro, Inc.*, 667 F.2d 577, 584 (7th Cir. 1981) (same); *Square Liner 360°, Inc. v. Chisum*, 691 F.2d 362, 379 (8th Cir. 1982) (same); *Maurice A. Garbell, Inc. v. Boeing Co.*, 546 F.2d 297, 300 (9th Cir. 1976) (a "finding of bad faith is an adequate foundation for deciding that [a] case is exceptional with the meaning of 35 U.S.C. § 285"); *Halliburton Co. v. Dow Chem. Co.*, 514 F.2d 377, 381 (10th Cir. 1975) (litigating in "bad faith" can support an exceptional case finding).

In short, the Federal Circuit's conjunctive rule has no basis in precedent, text, or common sense. This Court should make clear it has no proper place in interpreting § 285.

C. Current Federal Circuit Case Law Tips the Scales in Favor of Patentees, Ignoring the Text of § 285 and This Court's Precedent.

Even beyond unnecessarily requiring both subjective bad faith and objective unreasonableness to support an exceptional case finding, the Federal Circuit has made it unduly difficult for alleged infringers to establish those factors.[3] First, with

---

[3] Patent fees under § 285 were awarded only 23 times (excluding awards in default judgments) between January 1, 2010, and December 31, 2012. When instances of fees being granted due to willfulness or inequitable conduct are removed from this set of cases, fees have only been awarded 6 times during this time period, highlighting the extreme difficulty in satisfying the Federal Circuit's two-part test. *See Trends in Awards of Attorneys' Fees under 35 U.S.C. § 285 between 2003-2005 and 2010-2012*, LexMachina.com (Dec. 9, 2013),

respect to subjective bad faith, the Federal Circuit has adopted "a presumption that an assertion of infringement of a duly granted patent is made in good faith," which makes it very difficult for alleged infringers to establish bad faith. *Medtronic Navigation, Inc. v. BrainLAB Medizinische Computersysteme GmbH*, 603 F.3d 943, 954 (Fed. Cir. 2010). Second, while the Federal Circuit has at times suggested that the "objective[] baseless[ness]" prong of its subjective-objective test requires an assessment of whether a "'reasonable litigant'" could "'expect success on the merits,'" *Dominant Semiconductors Sdn. Bhd. v. OSRAM GmbH*, 524 F.3d 1254, 1260 (Fed. Cir. 2008), it has also applied a higher standard which requires an alleged infringer to establish that a patentee's case has "'no objective foundation,'" *MarcTec, LLC v. Johnson & Johnson*, 664 F.3d 907, 916 (Fed. Cir. 2012).

These standards force alleged infringers to meet a far higher burden than patentees to obtain fees and thus cannot be squared with § 285's text or this Court's precedent. In *Fogerty*, this Court emphasized that when it comes to a grant of attorneys' fees in copyright cases, "[p]revailing plaintiffs and prevailing defendants are to be treated alike." 510 U.S. at 534. The Court explained that "[t]he statutory language ... gives no hint that successful plaintiffs are to be treated differently from successful defendants," and that "[t]he legislative history of § 505 provides no support for treating prevailing

---

https://lexmachina.com/2013/12/trends-in-awards-of-attorneys-fees-under-35-u-s-c-%C2%A7-285-between-2003-2005-and-2010-2012/.

plaintiffs and defendants differently with respect to the recovery of attorney's fees." *Id.* at 522-23.

The same is true of § 285. The provision's text does not distinguish between prevailing plaintiffs and defendants; it is neutral when it comes to patentees and alleged infringers. Indeed, this Court recognized as much in *Fogerty*. *See* 510 U.S. at 525 n.12 ("the federal fee-shifting statutes in the patent and trademark fields, which are more closely related to that of copyright, support a party-neutral approach"); *id.* ("Consistent with the party-neutral language, courts have generally awarded attorney's fees in an evenhanded manner based on the same criteria.").

The Federal Circuit's good faith presumption ensures that patentees have the high ground in clashes over attorneys' fees. No similar presumption protects alleged infringers. And the *MarcTec* standard for objective unreasonableness skews matters even further. Even when an infringement case is based on a truly specious legal theory, it may be impossible for an alleged infringer to establish that the patentee's case has "'no objective foundation.'" *MarcTec*, 664 F.3d at 916. Further, because the standard requires the entire case to lack an objective foundation, patentees can defeat a request for fees if some aspects of their claims have merit, even if the case overall did not. It should be sufficient to demonstrate that a patentee lacks an objectively reasonable prospect of prevailing on his overall claims, even if there is some merit to certain

portions of them.[4]

D. Federal Circuit § 285 Precedent Encourages Frivolous Patent Litigation.

The current patent law landscape makes direction from this Court on attorneys' fees in patent cases absolutely critical. Patent litigation is changing, and not for the better. There has been an explosion in cases alleging patent infringement in the last few years—nearly twice as many infringement suits were filed between January 2011 and December 2012 than were filed between January 2007 and December 2008. *See* Sara Jeruss et al., *The AIA 500 Expanded: The Effects of Patent Monetization Entities* app. A (UC Hastings Research Paper No. 45, 2013). This doubling of suits is not because defendants—most of whom innovate and own substantial patent portfolios—have suddenly become twice as careless about respecting intellectual property rights. Instead, what has changed is not the nature of the accused infringers, but the nature and tactics of the plaintiffs.

As Justice Kennedy presciently explained in his concurrence in *eBay*, 547 U.S. at 396 (Kennedy, J., concurring), "[a]n industry has developed in which firms use patents not as a basis for producing and selling goods but, instead, primarily for obtaining

---

[4] Viewing the question in terms of "objective reasonableness" as opposed to "no objective foundation" is also consistent with the copyright law. *See, e.g.*, *Fogerty*, 510 U.S. at 534 n.19 ("'objective unreasonableness ... in the legal components of the case'" can support an award of fees (quoting *Lieb*, 788 F.2d at 156)).

licensing fees." This industry has flourished in the seven years since *eBay*. Although there may be room for disagreement about what constitutes a patent assertion entity, or PAE, there is no serious dispute that suits filed by PAEs now dominate the patent docket of the federal courts. Between the year *eBay* was decided and 2011, the number of defendants sued by PAEs quadrupled. *Litigations Over Time*, PatentFreedom.com (Aug. 6, 2013), https://www.patentfreedom.com/about-npes/litigations/; *see also* U.S. Gov't Accountability Office, GAO-13-465, Intellectual Property: Assessing Factors That Affect Patent Infringement Litigation Could Help Improve Patent Quality 18-19 (2013), http://www.gao.gov/assets/660/657103.pdf (reporting that the number of defendants sued by PAEs grew from 834 in 2007 to 3,401 in 2011). PAEs now file a majority of all patent infringement suits. *See* Colleen Chien, *Patent Trolls by the Numbers*, Patently-O (Mar. 14, 2013), http://www.patentlyo.com/patent/2013/03/chien-patent-trolls.html.

The increase in PAE suits is not attributable to increased innovation by these entities. The rapid escalation in PAE infringement suits is a function of the business model employed by PAEs. While innovative companies practicing their own patents have built-in disincentives to litigate, such as the potential required disclosure of confidential and trade secret information, and can face negative consequences from unsuccessful litigation, litigation is the business of PAEs. As the White House has recognized, many of these entities routinely file "nuisance suits" based on the assertion of broad and ambiguous patents in an effort to extort the payment

of "licensing fees" or an undeserved settlement. *See* Executive Office of the President, *Patent Assertion and U.S. Innovation* 4 (June 4, 2013). Unfortunately, nuisance suits of this sort "are a daily fact of life for most corporate legal departments," Ranganath Sudarshan, *Nuisance-Value Patent Suits: An Economic Model and Proposal*, 25 Santa Clara Computer & High Tech L.J. 159, 160 (2008), and more often than not these suits are brought against small or medium size defendants such as retailers, grocery stores, and hotels, that are more likely to settle rather than litigate, *see* Sara Jeruss et al., *The America Invents Act 500: Effects of Patent Monetization Entities on US Litigation*, 11 Duke L. & Tech. Rev. 357 (2012); Colleen Chien, *Startups and Patent Trolls*, Santa Clara Law Digital Commons 1-2 (2012) (55% of defendants in PAE suits make under $10 million per year). These suits are designed to leverage the difference between the costs necessary to litigate and the costs of settlement, and generally succeed. Infringement suits filed by PAEs settle 89.6% of the time. John R. Allison et al., *Patent Quality and Settlement Among Repeat Patent Litigants*, 99 Geo. L.J. 677, 694 (2011).[5]

Moreover, patentees that practice their patents face the risk of countersuits and often settle patent disputes through cross-licenses, which "remove blocking positions, facilitate the dissemination of technology, reduce costs by reducing risk and

---

[5] At the same time, when PAEs are forced to litigate a claim to conclusion, they succeed only 8% of the time—one-fifth as often as companies that own and practice their patents. John Allison et al., 99 Geo. L. J. at 693-94.

uncertainty and foster innovation." Google, BlackBerry, Earthlink & Red Hat, *Comments to the Federal Trade Commission and U.S. Department of Justice on Patent Assertion Entities* 11-12 (Apr. 5, 2013). PAEs, on the other hand, are "invulnerable to counter-claims of patent infringement," as they do not make or sell any products. Executive Office of the President, *supra*, at 4.

The growing prevalence of PAE nuisance suits underscores the necessity of a flexible and even-handed approach to exceptional case analysis under 35 U.S.C. § 285. The possibility of an exceptional case finding provides an obvious disincentive for the assertion of dubious patents in hopes that the gap between the defendant's cost of litigation and its cost of settlement will drive settlements and avoid any final determination of the patent's validity. Indeed, since the defendant's relatively high litigation costs are what helps fuel this business model, the possibility of shifting those costs when the defendant prevails creates both appropriate disincentives and the possibility of just deserts. Thus, eliminating the Federal Circuit's thumb on the scale in favor of patentees will not only improve the standard for awarding fees but help rebalance litigation incentives that have produced an explosion of patent litigation.

II. When An Exceptional Case Determination Is Based On The Objective Reasonableness Of A Claim Or Defense, That Determination Is A Question Of Law Reviewable *De Novo*.

As long as objective reasonableness is part of the exceptional case analysis—whether as a stand-alone basis for awarding fees or a component of a two-part

test—that determination should be reviewed *de novo* on appeal.

Under current Federal Circuit precedent, the determination whether to award attorneys' fees is a two-step process. *See, e.g.*, *Wedgetail Ltd. v. Huddleston Deluxe, Inc.*, 576 F.3d 1302, 1304 (Fed. Cir. 2009). First, a court must decide whether a case is "exceptional." *Forest Labs., Inc. v. Abbott Labs.*, 339 F.3d 1324, 1327 (Fed. Cir. 2003). Second, if the case is found exceptional, a court must decide whether to award fees. *Id.* at 1328. This two-part standard tracks the statutory language. *See* 35 U.S.C. § 285 ("The court in exceptional cases may award reasonable attorney fees to the prevailing party.").

Many aspects of a district court's decision to grant or deny attorneys' fees pursuant to § 285 should be reviewed under a deferential standard. As discussed in Part I, the Federal Circuit has already identified a number of circumstances that can support an exceptional case finding: "fraud or inequitable conduct in procuring the patent, misconduct during litigation, vexatious or unjustified litigation, [and] conduct that violates Fed. R. Civ. P. 11" can all support such a finding. *Brooks*, 393 F.3d at 1381. When a district court's exceptional case finding turns on one of those factors, that decision is appropriately reviewed deferentially. The same is true of a bad faith finding and the ultimate decision whether to award fees in the wake of an exceptional case finding, and if so how much to award. But an objective reasonableness determination is different. As long as that determination is a component of a

court's decision to shift fees, the objective reasonableness determination should be treated as a question of law and reviewed *de novo*.

Many of the legal issues that will inform a district court's exceptional case determination based on objective unreasonableness are themselves questions of law. When fees are awarded because of an objectively unreasonable assertion of infringement, that is frequently because the patentee's claim construction lacks merit, and claim construction is a question of law.[6] *See Cybor Corp. v. FAS Techs., Inc.*, 138 F.3d 1448, 1456 (Fed. Cir. 1998) (en banc). And many of the invalidity arguments typically advanced by alleged infringers also involve questions of law. *See, e.g., Merck & Co. v. Teva Pharm. USA, Inc.*, 395 F.3d 1364, 1369 (Fed. Cir. 2005) (obviousness); *Sitrick v. Dreamworks, LLC*, 516 F.3d 993, 999 (Fed. Cir. 2008) (enablement); *Young v. Lumenis, Inc.*, 492 F.3d 1336, 1344 (Fed. Cir. 2007) (definiteness); *Slip Track Sys., Inc. v. Metal-Lite, Inc.*, 304 F.3d 1256, 1262 (Fed. Cir. 2002) (conception). It makes little sense to review a determination that turns on questions of law as anything other than a question of law.

Moreover, questions that require objective assessment are frequently treated as questions of law in other areas. Under the doctrine of qualified immunity, government officials are shielded "'from liability for civil damages insofar as their conduct

---

[6] The Federal Circuit is currently revisiting the claim construction standard of review en banc in *Lighting Ballast Control LLC v. Philips Electronics North America Corp.*, 500 F. App'x 951 (Fed. Cir. 2013).

does not violate clearly established ... rights of which a reasonable person would have known.'" *Pearson v. Callahan*, 555 U.S. 223, 231 (2009). This Court recently reaffirmed that the "reasonable person" portion of the qualified immunity inquiry is based on "objective reasonableness," *Messerschmidt v. Millender*, 132 S. Ct. 1235, 1244-45 (2012), and the Court has suggested that the "objective reasonableness" inquiry is a question of law. *See Scott v. Harris*, 550 U.S. 372, 381 n.8 (2007); *Pitt v. District of Columbia*, 491 F.3d 494, 509-10 (D.C. Cir. 2007) ("whether an objectively reasonable officer would have believed his conduct to be lawful, in light of clearly established law" is a question of law). The courts of appeals recognize that qualified immunity's "objectively reasonable" inquiry requires consideration of a question of law.[7]

Similarly, whether an individual has a "reasonable expectation" of privacy for Fourth Amendment purposes is decided under a subjective-objective test, and the objective component of that test is also regularly treated as a question of law.

---

[7] *See, e.g., Wilson v. City of Boston*, 421 F.3d 45, 53 n.10 (1st Cir. 2005); *Lennon v. Miller*, 66 F.3d 416, 424 (2d Cir. 1995); *Curley v. Klem*, 499 F.3d 199, 211 (3d Cir. 2007); *Cloaninger ex rel. Estate of Cloaninger v. McDevitt*, 555 F.3d 324, 333 (4th Cir. 2009); *Colston v. Barnhart*, 146 F.3d 282, 285 n.2 (5th Cir. 1998); *Champion v. Outlook Nashville, Inc.*, 380 F.3d 893, 900-01 (6th Cir. 2004); *Riccardo v. Rausch*, 375 F.3d 521, 526 (7th Cir. 2004); *Engleman v. Deputy Murray*, 546 F.3d 944, 946-47 (8th Cir. 2008); *Rodriguez v. Maricopa Cnty. Comty. Coll. Dist.*, 605 F.3d 703, 707 (9th Cir. 2010); *Gonzales v. Duran*, 590 F.3d 855, 864 (10th Cir. 2009); *Johnson v. City of Fort Lauderdale, Fla.*, 126 F.3d 1372, 1378 n.7 (11th Cir. 1997).

United States v. Nerber, 222 F.3d 597, 599 (9th Cir. 2000) ("Whether a citizen's expectation of privacy was objectively reasonable is a question of law reviewed de novo."); *United States v. Garzon*, 119 F.3d 1446, 1449 (10th Cir. 1997) ("[A] determination of whether the defendant retained an objectively reasonable expectation of privacy ... is a question of law that we review *de novo*."); *United States v. Welliver*, 976 F.2d 1148, 1151 (8th Cir. 1992) (Whether a "subjective expectation" of privacy "is objectively reasonable" is "a question of law."). And the objective component of the *Noerr-Pennington* sham litigation test is a question of law as well. *See PRE*, 508 U.S. at 59. That objective questions are viewed as questions of law subject to *de novo* review outside patent law strongly counsels in favor of such treatment here. *Cf. eBay*, 547 U.S. at 391 ("These familiar principles apply with equal force to disputes arising under the Patent Act.").[8]

Pierce v. Underwood, 487 U.S. 552 (1988), which applied a deferential standard to fees awarded under the Equal Access to Justice Act ("EAJA"), does not suggest a different result. There, the Court identified several factors to be considered in deciding the appropriate standard of appellate review. First, the Court noted that in some instances, "the decision 'has turned on a determination that, as a matter of

---

[8] Subjecting an exceptional case determination based on objective unreasonableness to *de novo* review is also consistent with the practice of at least some of the courts of appeals in copyright cases. *See, e.g., Diamond Star*, 30 F.3d at 506 (if a fee award is based "'on a legal precept, our review is plenary'"); *Lieb*, 788 F.2d at 154 (same).

the sound administration of justice, one judicial actor is better positioned than another to decide the issue in question.'" *Id.* at 559-60 (quoting *Miller v. Fenton*, 474 U.S. 104, 114 (1985)). Second, the Court pointed to concerns about whether too searching a standard of review would result in an unnecessary expenditure of scarce appellate resources. *Id.* at 560. Third, the Court recognized the importance of giving the district court the necessary flexibility to resolve questions concerning "'multifarious, fleeting, special, narrow facts that utterly resist generalization.'" *Id.* at 561-62. Finally, the Court explained that when a district court's treatment of an issue has substantial consequences—monetary and otherwise—that issue should likely be "reviewed more intensively." *Id.* at 563.

All of the *Pierce* factors counsel in favor of *de novo* review when the objective reasonableness of a patent law claim or defense is at issue. While not uniquely qualified to define the scope of § 285, the Federal Circuit is undoubtedly "better positioned" than the district courts to decide whether a particular infringement claim or defense is objectively unreasonable. The Federal Circuit's relative expertise in patent cases is its *raison d'etre*, and this expertise is reinforced by the reality that the Federal Circuit reviews a steady stream of patent cases, whereas most district courts handle patent cases only episodically. Second, the difference in appellate resources used to review a patent claim or defense under a deferential or *de novo* standard as to its objective reasonableness is likely minimal (if any difference exists at all). Appeals of awards or denials of attorneys' fees almost always accompany, or follow

directly on the heels of, a related merits appeal. *See, e.g.*, *Meyer Intellectual Props. Ltd. v. Bodum, Inc.*, 690 F.3d 1354 (Fed. Cir. 2012); *Bard Peripheral Vascular, Inc. v. W.L. Gore & Assocs., Inc.*, 670 F.3d 1171 (Fed. Cir. 2012), *vacated in part on reh'g en banc*, 476 F. App'x 747; *i4i Ltd. P'ship v. Microsoft Corp.*, 598 F.3d 831 (Fed. Cir. 2010); *ICU Med., Inc. v. Alaris Med. Sys., Inc.*, 558 F.3d 1368 (Fed. Cir. 2009). Thus the Federal Circuit will be obligated to conduct a searching review of the theories of infringement and relevant defenses irrespective of the § 285 standard. And *de novo* review of whether claims and defenses are objectively reasonable in no way limits the flexibility of a district court in addressing "multifarious, fleeting" conduct. As already discussed, discretionary judgments about litigation misconduct should be subjected to deferential review on appeal, but objective reasonableness determinations are different. Finally, lest there be any doubt, the stakes are high—often tens of millions of dollars—in patent cases involving attorneys' fees, and orders of magnitude higher than in the EAJA cases at issue in *Pierce*.[9] Accordingly, any argument that *Pierce* mandates deferential review of exceptional case determinations based on objectively unreasonable

---

[9] *See, e.g.*, *Bard*, 670 F.3d at 1178 ($19 million); *MarcTec*, 664 F.3d at 922 ($4.6 million); *Lazare Kaplan Int'l, Inc. v. Photoscribe Techs., Inc.*, 628 F.3d 1359, 1366 (Fed. Cir. 2010) ($6 million); *Takeda Chem. Indus., Ltd. v. Mylan Labs, Inc.*, 549 F.3d 1381, 1385 (Fed. Cir. 2008) ($16.8 million); *Powell v. Home Depot U.S.A., Inc.*, 663 F.3d 1221, 1228 (Fed. Cir. 2011) ($2.8 million); *Monolithic Power Sys., Inc. v. O2 Micro Int'l Ltd.*, 726 F.2d 1359, 1365 (Fed. Cir. 2013) ($8.4 million).

claims or defenses is exactly backwards.

The Court's decision in *Cooter & Gell v. Hartmax Corp.*, 496 U.S. 384 (1990), does not command a different result. *Cooter* held that "an appellate court should apply an abuse-of-discretion standard in reviewing all aspects of a district court's Rule 11 determination." *Id.* at 405. But the *Cooter* Court's reasoning for deferring to district courts' Rule 11 determinations is inapplicable to attorneys' fee awards based on objectively unreasonable claims and defenses in patent cases. The *Cooter* Court noted the "difficulty of distinguishing between legal and factual issues" "in the Rule 11 context." *Id.* at 401. Distinguishing between issues of fact and law under the appropriate § 285 standard is not difficult at all. Questions that run to the objective reasonableness of a claim or defense should be viewed as questions of law. The remaining potential reasons for deeming a case exceptional, such as "fraud or inequitable conduct in procuring the patent, misconduct during litigation, [and] vexatious or unjustified litigation," *Brooks*, 393 F.3d at 1381, the ultimate decision whether to award fees, and how much to award, can all be treated as questions subject to deferential review.

The *Cooter* Court also stated that deferential review of Rule 11 sanctions was warranted because "[t]he district court is best acquainted with the local bar's litigation practices and thus best situated to determine when a sanction is warranted to serve Rule 11's goal of specific and general deterrence." 496 U.S. at 404. That concern is addressed under the appropriate § 285 standard by subjecting fee awards

flowing from general litigation misconduct to deferential review. And, unlike Rule 11, the objective component of an exceptional case determination is an area where the Federal Circuit's "review of whether a legal position was reasonable" actually "is []likely to establish clear guidelines for lower courts" and "clarify the underlying principles of law." *Id.* at 405. Except in the rare cases where this Court opts to get involved, the Federal Circuit has a congressionally-granted monopoly on judicial standard setting in patent law. *See Markman v. Westview Instruments, Inc.*, 517 U.S. 370, 390 (1996) ("Congress created the Court of Appeals for the Federal Circuit as an exclusive appellate court for patent cases, observing that increased uniformity would strengthen the United States patent system in such a way as to foster technological growth and industrial innovation." (citation and internal quotation marks omitted)). Questions about the objective unreasonableness of a claim or defense will inform not only future litigation choices and fee determinations, but also the law of claim construction and patent validity more broadly.[10]

III. The Standard Of Review This Court Adopts For Exceptional Case Determinations Should Not Impact The Standard Of Review For Willful Infringement Findings.

No matter what standard or standard of review

---

[10] *Cooter* also reviewed the *Pierce* factors and concluded that those factors counseled in favor of abuse-of-discretion review of Rule 11 findings. As explained, the *Pierce* factors decisively counsel in favor of *de novo* review of the objective reasonableness of a claim or defense in patent cases.

the Court adopts for exceptional case determinations and attorneys' fee awards under § 285, it should make plain that its holding does not implicate the distinct and critical question of the standard of review for enhanced damages due to willful infringement under 35 U.S.C. § 284. The Federal Circuit recently has helpfully clarified that the objective component of a willful infringement finding should be reviewed *de novo*. *See Bard Peripheral Vascular, Inc. v. W.L. Gore & Assocs., Inc.*, 682 F.3d 1003, 1005 (Fed. Cir. 2012). Whatever this Court decides about the § 285 questions, it should make clear that it has no necessary consequence for the standard of review in the distinct willful infringement context. Indeed, a decision that inadvertently caused the Federal Circuit to reconsider *Bard* could exacerbate the litigation incentives of PAEs and further tilt the playing field in favor of patentees.

A finding of willful infringement can have financial consequences that go well beyond a shifting of fees. *See* 35 U.S.C. § 284 ("the court may increase the damages up to three times the amount found or assessed"). To establish willful infringement, a patentee must establish "that the infringer acted despite an objectively high likelihood that its actions constituted infringement of a valid patent." *In re Seagate Tech., LLC*, 497 F.3d 1360, 1371 (Fed. Cir. 2007) (en banc). Once that "threshold objective standard is satisfied, the patentee must also demonstrate that this objectively-defined risk ... was either known or so obvious that it should have been known to the accused infringer." *Id.* In recognition of the fact that "the court is in the best position" to

make the "threshold determination of objective recklessness," the Federal Circuit in *Bard* helpfully clarified that the objective prong of the willful infringement test "is best decided by the judge as a question of law subject to *de novo* review." *Bard*, 682 F.3d at 1006-07; *see id.* at 1008 ("[T]he ultimate question of whether a reasonable person would have considered there to be a high likelihood of infringement of a valid patent should always be decided as a matter of law by the judge.").

This Court should thus be explicit that any ruling on the appropriate standard or standard of review for § 285 fees should not be interpreted to apply in the arena of willful infringement. Absent direction from this Court, there is a very real danger that the Federal Circuit will translate this Court's holding in *Highmark* to the very different trebled damages/willful infringement context. The Federal Circuit has held that "the standard for showing objective baselessness for purposes of § 285" is "'identical to the objective recklessness standard for enhanced damages ... against an accused infringer for § 284 willful infringement actions.'" *Bard*, 682 F.3d at 1007 (quoting *iLor, LLC v. Google, Inc.*, 631 F.3d 1372, 1377 (Fed. Cir. 2011)). And the Federal Circuit cited *Bard* in its decision in *Highmark*. *See* Pet. App. 9a.

If this Court holds that all components of a § 285 fee determination—including objective reasonableness—are to be reviewed under a deferential standard, the Court should make clear that its reasoning turns on the uniquely discretionary nature of attorneys' fees

determinations and has no necessary consequences for the very different treble damages context of § 284. As discussed, legal doctrines that turn on objective assessments are typically treated as questions of law and subject to *de novo* review. If there is any basis to depart from that general rule in the fee-shifting context, it would necessarily flow from the notion that a fee-shifting determination is inherently discretionary and within the district court's equitable powers. *See, e.g.*, *F.D. Rich*, 417 U.S. at 130 (the Court has "long recognized that attorneys' fees may be awarded to a successful party when his opponent has acted in bad faith"); *Vaughan*, 369 U.S. at 530 (the "allowance of counsel fees" is "'part of the historic equity jurisdiction of the federal courts'"). If the Court were to reach that conclusion, it should make clear that its reasoning does not extend to other contexts, including the willfulness context. After all, district courts do not have the discretion to treble damages as they see fit in the absence of a statutory provision endowing them with that extraordinary power.

Equally important, the textual sources, functions, and practical consequences of attorneys' fees and trebling damages are not the same. Attorneys' fees and willful infringement sanctions often serve very different ends and have highly disparate effects. While the treble damages that follow a willful infringement finding are meant to serve a punitive function and raise distinct concerns about overdeterring legitimate conduct, § 285's primary aim is to "compensat[e] ... the prevailing party for its monetary outlays in the prosecution or defense of the suit." *Raylon, LLC v. Complus Data*

Innovations, Inc., 700 F.3d 1361, 1373 (Fed. Cir. 2012) (Reyna, J., concurring). Furthermore, while there are eye-popping figures involved in attorneys' fees litigation in patent cases, those figures often pale in comparison with treble damages figures, which can reach into the hundreds of millions. *See, e.g.*, *Bard*, 670 F.3d at 1178 (district court awarded $185 million for willful infringement). And, as this Court noted in *Pierce*, when a district court's disposition of an issue has substantial monetary consequences, that issue should be "reviewed more intensively." 487 U.S. at 563.

CONCLUSION

For the reasons set forth above, in *Octane Fitness*, this Court should hold that when district courts conduct exceptional case analysis under 35 U.S.C. § 285: (1) there is no precise formula for determining what constitutes an exceptional case; (2) in the absence of a single factor that supports an exceptional case finding, courts should assess whether a litigant's conduct viewed in its entirety makes a case exceptional; (3) bringing a suit in subjective bad faith and lodging an objectively unreasonable infringement allegation each can individually warrant an exceptional case finding; (4) patentees do not benefit from a presumption that infringement allegations are made in good faith; and (5) an alleged infringer need only show that a patentee's claims had no reasonable prospect of success—as opposed to "no objective foundation"—when arguing that a patentee's conduct makes a case exceptional.

In *Highmark*, this Court should hold that when an exceptional case determination is based on the objective reasonableness of a claim or defense, that determination is a question of law reviewable *de novo*. In the alternative, if this Court holds that all components of a § 285 fee determination are to be reviewed under a deferential standard, the Court should make clear that its reasoning does not extend beyond the unique context of attorneys' fees determinations.

Respectfully submitted,

PAUL D. CLEMENT
Counsel of Record
D. ZACHARY HUDSON
BANCROFT PLLC
1919 M Street NW
Suite 470
Washington, DC 20036
(202) 234-0090
pclement@bancroftpllc.com

Counsel for Amici Curiae

December 9, 2013

AMICUS CURIAE BRIEF

RECORD AND BRIEFS

Supreme Court, U.S.
FILED
DEC - 9 2013
OFFICE OF THE CLERK

No. 12-1184

IN THE

Supreme Court of the United States

OCTANE FITNESS, LLC,

Petitioner,

v.

ICON HEALTH & FITNESS, INC.,

Respondent.

On Writ of Certiorari to the United States Court of Appeals for the Federal Circuit

BRIEF OF THE INTELLECTUAL PROPERTY LAW ASSOCIATION OF CHICAGO AS AMICUS CURIAE IN SUPPORT OF NEITHER PARTY

JOHN M. AUGUSTYN*
JEFFREY B. BURGAN
LEYDIG, VOIT & MAYER, LTD.
TWO PRUDENTIAL PLAZA
180 N. STETSON AVE.
SUITE 4900
CHICAGO, IL 60601
(312) 616-5600
JAUGUSTYN@LEYDIG.COM

BRENT A. HAWKINS,
PRESIDENT
THE INTELLECTUAL
PROPERTY LAW
ASSOCIATION OF CHICAGO
P.O. BOX 472
CHICAGO, IL 60690
(312) 984-7764

Of Counsel:
CHARLES W. SHIFLEY
BANNER & WITCOFF, LTD.
10 SOUTH WACKER DRIVE
SUITE 3000
CHICAGO, IL 60606
(312) 463-5000

December 9, 2013 * Counsel of Record

Library of Congress
Law Library

TABLE OF CONTENTS

Page

TABLE OF AUTHORITIES iv

INTEREST OF AMICUS CURIAE 1

SUMMARY OF ARGUMENT 2

ARGUMENT 3

I. A PARTY-NEUTRAL, EXCEPTIONAL CASE STANDARD WOULD BENEFIT PATENTEES, ACCUSED INFRINGERS AND THE PUBLIC 3

II. THE FEDERAL CIRCUIT HAS FAILED TO ARTICULATE A CONSISTENT STANDARD FOR ASSESSING WHETHER A CASE IS EXCEPTIONAL IN THE ABSENCE OF INEQUITABLE CONDUCT OR LITIGATION MISCONDUCT 6

A. HISTORY OF 35 U.S.C. § 285 7

B. THE FEDERAL CIRCUIT APPLIES AN OBJECTIVE/OBJECTIVE STANDARD IN SOME CASES 8

C. THE FEDERAL CIRCUIT APPLIES A SUBJECTIVE/OBJECTIVE STANDARD IN OTHER CASES 10

D. PREVAILING ACCUSED INFRINGERS ARE SUBJECT TO THE HIGHER BURDEN OF THE SUBJECTIVE/OBJECTIVE STANDARD 13

III. DISTRICT COURTS HAVE DEVELOPED AN INCOMPATIBLE AND INEQUITABLE BODY OF LAW DUE TO A LACK OF A CONSISTENT STANDARD 16

IV. THE LEGISLATIVE HISTORY AND CASE LAW RELATING TO SECTION 285 ESTABLISH THAT PREVAILING ACCUSED INFRINGERS MAY DEMONSTRATE EXCEPTIONALITY UNDER A STANDARD ANALAGOUS TO THAT SET FORTH IN SEAGATE 22

V. COURTS ALREADY EMPLOY A PARTY-NEUTRAL STANDARD TO AWARD ATTORNEY FEES IN COPYRIGHT AND TRADEMARK CONTEXTS 24

A. COPYRIGHT ACTIONS HAVE A PARTY-NEUTRAL STANDARD 24

B. IN TRADEMARK ACTIONS, MANY CIRCUITS APPLY A PARTY-NEUTRAL STANDARD 25

C. SOME CIRCUITS EVEN APPLY A LOWER STANDARD FOR PREVAILING DEFENDANTS IN TRADEMARK ACTIONS 27

VI. A CONSISTENT AND PARTY-NEUTRAL STANDARD FOR AWARDING ATTORNEY FEES TO PREVAILING ACCUSED INFRINGERS SHOULD BE ARTICULATED BEFORE DETERMINING A STANDARD OF REVIEW 28

CONCLUSION 29

TABLE OF AUTHORITIES

Cases

Aromatique, Inc. v. Gold Seal, Inc.,
28 F.3d 863 (8th Cir. 1994) 26

Atmel Corp. v. Authentec, Inc.,
557 F. Supp. 2d 1051 (N.D. Cal. 2008) 18, 19

Auto. Techs. Int'l, Inc. v. Siemens VDO Auto. Corp.,
744 F. Supp. 2d 646 (E.D. Mich. 2010) 17, 18

Baltimore & P. R. Co. v. Jones,
95 U.S. 439 (1877) 10

BIAX Corp. v. NVIDIA Corp.,
No. 09-cv-01257, 2013 WL 1324935 (D. Colo. Mar. 30, 2013), *reconsideration denied*, No. 09-cv-01257, 2013 WL 4051901 (D. Colo. Aug. 12, 2013) 21

Brooks Furniture Mfg., Inc. v. Dutailier Int'l, Inc.,
393 F.3d 1378 (Fed. Cir. 2005) 10, 11, 12, 13, 14, 15, 18, 20, 22, 23, 28

Conopco, Inc. v. Campbell Soup Co.,
95 F.3d 187 (2d Cir. 1996) 26

Eltech Sys. Corp. v. PPG Indus., Inc.,
903 F.2d 805 (Fed. Cir. 1990) 8, 9, 10, 12, 14, 15, 16, 18, 19, 20, 23

Farmer v. Brennan,
511 U.S. 825 (1994) 10

Fogerty v. Fantasy, Inc.,
510 U.S. 517 (1994) 9, 14, 16, 24, 25

Forest Labs., Inc. v. Abbott Labs.,
339 F.3d 1324 (Fed. Cir. 2003) 9, 12

Highmark, Inc. v. Allcare Health Mgmt. Sys., Inc.,
134 S. Ct. 48 (2013).....28

Highmark, Inc. v. Allcare Health Mgmt. Sys., Inc.,
687 F.3d 1300 (Fed. Cir. 2012), *cert. granted*, 134
S. Ct. 48 (U.S. 2013).....15, 23, 29

Highmark, Inc. v. Allcare Health Mgmt. Sys., Inc.,
706 F. Supp. 2d 713 (N.D. Tex. 2010), *order
vacated on reconsideration*, 732 F. Supp. 2d 653
(N.D. Tex. 2010), *aff'd in part, rev'd in part*, 687
F.3d 1300 (Fed. Cir. 2012).....29

IA Labs CA, LLC v. Nintendo Co., Ltd.,
No. 10-833, 2012 WL 1565296 (D. Md. May 1,
2012), *aff'd*, 515 F. App'x 892 (Fed. Cir. 2013) ...21

iLOR, LLC v. Google, Inc.,
631 F.3d 1372 (Fed. Cir. 2011) 14, 15, 17, 18, 20

In re Seagate Techs., LLC,
497 F.3d 1360 (Fed. Cir. 2007) .....
..... 3, 12, 13, 14, 15, 16, 19, 20, 22, 23, 30

Lipscher v. LRP Publ'ns, Inc.,
266 F.3d 1305 (11th Cir. 2001).....26

MarcTec, LLC v. Johnson & Johnson,
664 F.3d 907 (Fed. Cir. 2012) 21

MarcTec, LLC v. Johnson & Johnson,
No. 07-cv-825, 2010 WL 680490 (S.D. Ill. Feb. 23,
2010), *aff'd*, 664 F.3d 907 (Fed. Cir. 2012).... 17, 20

Midtronics, Inc. v. Aurora Performance Prods. LLC,
800 F. Supp. 2d 970 (N.D. Ill. 2011).....20

Modine Mfg. Co. v. Allen Grp. Inc.,
917 F.2d 538 (Fed. Cir. 1990) 12

Motionless Keyboard Co. v. Microsoft Corp.,
No. Civ. 04-180, 2005 WL 1899377 (D. Or. Aug. 5, 2005), *aff'd*, 184 F. App'x 967 (Fed. Cir. 2006) 18, 19

Nat'l Ass'n of Prof'l Baseball Leagues, Inc. v. Very Minor Leagues, Inc.,
223 F.3d 1143 (10th Cir. 2000) 28

Nightingale Home Healthcare v. Anodyne,
626 F. 3d 958 (7th Cir. 2010) 26

Noxell Corp. v. Firehouse No. 1 Bar-B-Que Rest.,
771 F.2d 521 (D.C. Cir. 1985) 27

Prof'l Real Estate Investors v. Columbia Pictures Indus.,
508 U.S. 49 (1993) 10

Raylon, LLC v. Complus Data Innovations, Inc.,
700 F.3d 1361 (Fed. Cir. 2012), *cert. denied*, 134 S. Ct. 94 (2013) 15

Reader's Digest Ass'n, Inc. v. Conservative Digest, Inc.,
821 F.2d 800 (D.C. Cir. 1987) 27

Retail Servs. Inc. v. Freebies Publ'g,
364 F.3d 535 (4th Cir. 2004) 27

Rohm & Haas Co. v. Crystal Chem. Co.,
736 F.2d 688 (Fed. Cir. 1984) 7, 8, 15, 22, 23

S.C. Johnson & Son, Inc. v. Carter-Wallace, Inc.,
781 F.2d 198 (Fed. Cir. 1986) 12

Securacomm Consulting, Inc. v. Securacom Inc.,
224 F.3d 273 (3d Cir. 2000) 26

Stephen W. Boney, Inc. v. Boney Servs., Inc.,
127 F.3d 821 (9th Cir. 1997) 27

Tamko Roofing Prods., Inc. v. Ideal Roofing Co.,
282 F.3d 23 (1st Cir. 2002) 26

Veteran Med. Prods. v. Bionix Dev. Corp.,
No. 1:05-cv-655, 2009 WL 891724 (W.D. Mich.
Mar. 31, 2009) 21

Vistan Corp. v. Fadei, USA, Inc.,
No. C-10-04862, 2013 WL 1345023 (N.D. Cal.
Apr. 2, 2013) 17, 18, 19

Whren v. United States,
517 U.S. 806 (1996) 11

Statutes

15 U.S.C. § 1117(a) 25, 26

17 U.S.C. § 505 24

35 U.S.C. § 273 7

35 U.S.C. § 285 ..... passim

U.S. CONST. art. I, § 8 4

Other Authorities

75 J. Pat. & Trademark Off. Soc'y 161 (1993) 8

S. REP. NO. 79-1503, at 2 (1946), *reprinted in* 1946
U.S. Code Congressional Service 1386, 1387 7

INTEREST OF AMICUS CURIAE

The Intellectual Property Law Association of Chicago ("IPLAC") submits this brief as amicus curiae in support of neither party on the ultimate merits of the case.[1]

Founded in 1884, the Intellectual Property Law Association of Chicago is a voluntary bar association of over 1,000 members who practice in the areas of patents, trademarks, copyrights, trade secrets and the legal issues they present. IPLAC is the country's oldest bar association devoted exclusively to intellectual property matters. In litigation, IPLAC's members are split about equally between plaintiffs and defendants. Its members include attorneys in private and corporate practices before federal bars throughout the United States, as well as the U.S. Patent and Trademark Office and the U.S. Copyright Office. As part of its central

---

[1] Petitioner and respondents each have filed and lodged with the Clerk a letter of consent to the filing of amicus curiae briefs in support of either party or of neither party. Pursuant to Supreme Court Rule 37.6, this brief was not authored, in whole or in part, by counsel to a party, and no monetary contribution to the preparation or submission of this brief was made by any person or entity other than IPLAC or its counsel. After reasonable investigation, IPLAC believes that (a) no member of its Board or Amicus Committee who voted to prepare this brief, or any attorney in the law firm or corporation of such a member, represents a party to this litigation in this matter, (b) no representative of any party to this litigation participated in the authorship of this brief, and (c) no one other than IPLAC, or its members who authored this brief and their law firms or employers, made a monetary contribution to the preparation or submission of this brief.

objectives, IPLAC is dedicated to aiding in the development of intellectual property law, especially in the federal courts.[2]

SUMMARY OF ARGUMENT

Prevailing patent litigants may be entitled to an award of attorney fees if a case is deemed exceptional under 35 U.S.C. § 285. The statute's language is party-neutral. The legislative history surrounding the statute supports this interpretation. The Federal Circuit, in spite of frequent assertions that section 285 is party-neutral, has failed to capture the neutrality of this statute. The standard under which a prevailing accused infringer may seek attorney fees has been effectively raised to require a showing of subjective bad faith on the part of a patentee. No such showing is required by a prevailing patentee to be eligible for attorney fees. The result has been the uneven construction and application of section 285 at both the trial and appellate court levels biased against prevailing accused infringers.

Amicus respectfully requests that this Court provide a consistent and party-neutral standard for applying section 285 to provide guidance to parties to patent litigation where there has been neither inequitable conduct nor litigation misconduct. An appropriate standard would require a prevailing accused infringer to demonstrate (1) the patentee

---

[2] While over 30 federal judges are honorary members of IPLAC, none of them was consulted or participated in any way regarding this brief.

sued despite an objectively high likelihood that the accused infringer's conduct did not constitute patent infringement, and (2) the patentee knew or should have known that the accused infringer's conduct did not constitute patent infringement and/or the patent was invalid.[3] This standard is analogous to the standard set forth in *In re Seagate Technologies, LLC* under which prevailing patentees may be awarded attorney fees based on willful infringement. 497 F.3d 1360, 1371 (Fed. Cir. 2007). Furthermore, this interpretation is consistent with the application of the attorney fee-shifting statutes of copyright and trademark litigation.

ARGUMENT

I. A PARTY-NEUTRAL, EXCEPTIONAL CASE STANDARD WOULD BENEFIT PATENTEES, ACCUSED INFRINGERS AND THE PUBLIC

IPLAC seeks fairness and clarity in the law. This is especially true when it comes to furthering innovation and the high stakes presented in patent litigation. Whether a case may go to trial or be resolved through settlement is often determined by the ability to assess the true value of the case. One factor in assessing that value is the likelihood that

---

[3] The analogous standard that should apply to cases in which the patentee is the prevailing party would require the patentee to demonstrate (1) the accused infringer defended the suit in spite of the objectively high likelihood that the patentee's patent was infringed and/or valid, and (2) the accused infringer knew or should have known that the patentee's patent was infringed and/or valid.

the case would be deemed exceptional and result in an award of attorney fees.

Section 285 makes no distinction between patentees and accused infringers, allowing fees to be awarded to whichever is the prevailing party in "exceptional cases." Fairness, logic, and justice dictate that patentees and accused infringers should be held to an equal standard for an award of attorney fees. This is reflected in the traditional "American Rule," which dictates that each side will pay its own fees. When each side is responsible for its own fees, risks and rewards are generally balanced for each. In exceptional cases, however, when one side may be required to pay the other's fees, a lower standard for one side reduces that side's risk compared to the other.

Beyond just fairness, equal standards for plaintiffs and defendants seeking attorney fees provide for balancing incentives between the two sides. The risks and rewards for each side reflect the relative value that society places on each side. We should not value a patent more highly than we value innovation on the margins of the patent. Similarly, we should not value blind pursuit of an alleged infringer more highly than eliminating an invalid patent that stymies industry.

Patents should encourage innovation. U.S. CONST. art. I, § 8, cl. 8. In exchange for an appropriate disclosure of the invention, a patent owner is granted the right for a limited time to exclude others from making or using the claimed invention. But, the scope of the patent's protection is narrowly circumscribed. A patent owner may not lawfully prevent others from innovating around the

margins of its patent or from using the patent's disclosure as a foundation for further invention.

Society benefits from both the innovation of patent owners and the innovation of others. Both sides should run the same risk of having to pay the other side's attorney fees. A lower standard for one side encourages that side to abuse the system and waste judicial resources by filing law suits or offering defenses with a low probability of success.

If alleged infringers must meet a higher standard than patentees to prove a case is exceptional, patent owners may be encouraged to file marginal lawsuits. Such cases by patentees subject a defendant to the inconvenience and expense of defending an infringement suit. This leads to diminished innovation by others because even if they will not infringe, they may not be able to afford to defend a lawsuit. In this scenario, the courts enable anticompetitive activity by providing incentives for filing suits that harm competition.

From the other perspective, if patentees must meet a higher standard than accused infringers to prove a case is exceptional, potential infringers will be less likely to avoid patents. Patentees may be less likely to file a well-founded lawsuit where they risk paying the defendant's attorney fees besides their own.

The courts and the public benefit from more rational litigation when both patentees and accused infringers run the same risk of paying the opponent's attorney fees and both parties know the standard by which such risk will be judged. A balanced standard encourages both sides to look objectively at the merits of their cases from the beginning. This

encourages settlement and decreases overall litigation costs.

The public also benefits from increased competition if both patentees and accused infringers must meet the same standard to receive attorney fees in an exceptional case. If meritless claims and defenses subject patent owners and accused infringers to the same risk of paying attorney fees, the scope of the patents will become clearer. People will more freely innovate around patents. And as patentees realize the boundaries of their own patents as well as the validity of their patents, they will be encouraged to continue innovation to expand those boundaries.

II. THE FEDERAL CIRCUIT HAS FAILED TO ARTICULATE A CONSISTENT STANDARD FOR ASSESSING WHETHER A CASE IS EXCEPTIONAL IN THE ABSENCE OF INEQUITABLE CONDUCT OR LITIGATION MISCONDUCT

The Federal Circuit has inconsistently described the circumstances under which a case may be found exceptional under 35 U.S.C. § 285. Section 285 provides that "[t]he court in exceptional cases may award reasonable attorney fees to the prevailing

party." 35 U.S.C. § 285.[4] This inconsistency has resulted in an uneven application of section 285 by trial courts to prevailing parties.

A. HISTORY OF 35 U.S.C. § 285

The case law and statutory history surrounding section 285 were interpreted by the Federal Circuit in *Rohm & Haas Co. v. Crystal Chemical Co.* The court, in exploring the statutory origins of section 285, noted that "[p]rior to 1946, the Supreme Court, following the American Rule, had held that the award of attorney fees based upon equitable considerations was not available in patent cases." 736 F.2d 688, 690 (Fed. Cir. 1984). The court noted in 1946 that Congress amended § 4921 of the Revised Statutes to permit the award attorney fees to a prevailing patent litigant at the court's discretion. *Id.* at 690. The court also highlighted that the Senate report pertaining to this revision advised that it applied to both prevailing patentees and prevailing accused infringers, and was "made general so as to enable the court to prevent a gross injustice to an alleged infringer." *Id.* at 690-1 (citing S. REP. NO. 79-1503, at 2 (1946), *reprinted in* 1946 U.S. Code Congressional Service 1386, 1387).

---

[4] 35 U.S.C. § 273 provides a specific example of when a case may be deemed exceptional for the purpose of awarding attorney fees. Under section 273, an accused infringer may defend against infringement by showing prior commercial use. If an accused infringer brings forth this defense, but fails to demonstrate a reasonable basis for asserting the defense, the case is deemed exceptional for the purposes of awarding attorney fees under section 285.

The Patent Act of 1952 codified this attorney fee provision in section 285 and eliminated any mention of "discretion" while inserting the qualifier that courts may award attorney fees in "exceptional cases." *Id.* at 691. The Revision Note to section 285, as restated by its author, posited that the phrase "exceptional cases" was added to the statute to "express the intention of the old statute as shown by its legislative history and as interpreted by the courts." *Id.* (citing 75 J. Pat. & Trademark Off. Soc'y 161, 216 (1993)). From an historical standpoint, section 285 is grounded in notions of fairness and the prevention of "gross injustice" to prevailing parties.

Considering this history, the Federal Circuit found that section 285 allows a court to award attorney fees to a prevailing accused infringer only when it would be "unjust not to do so." *Id.* at 692. The court also noted that "[c]ases awarding attorney fees to prevailing patentees have typically found 'exceptional' circumstances in willful and deliberate infringement by an infringer, or in the prolongation of litigation in bad faith." *Id.* The court, however, did not define "bad faith."

B. THE FEDERAL CIRCUIT APPLIES AN OBJECTIVE/OBJECTIVE STANDARD IN SOME CASES

In *Eltech Systems Corp. v. PPG Industries, Inc.*, the Federal Circuit held that any prevailing party was subject to the same standards for assessing whether the losing party had engaged in bad faith litigation. 903 F.2d 805, 811 (Fed. Cir. 1990). The court also provided definition to "bad faith litigation," at least for a patentee, determining that "[w]here, as here, the patentee is manifestly

unreasonable in assessing infringement, while continuing to assert infringement in court, an inference is proper of bad faith, whether grounded in or denominated wrongful intent, recklessness, or gross negligence." *Id.* This Court, in *Fogerty v. Fantasy, Inc.*, referenced *Eltech* as evidence that section 285 is a party-neutral fee-shifting statute and is treated as such in patent litigation. 510 U.S. 517, 525 n.12 (1994).

The *Eltech* decision was relied on by the Federal Circuit in *Forest Laboratories., Inc. v. Abbott Laboratories* as an example of circumstances that demonstrate bad faith litigation by a patentee. 339 F.3d 1324, 1329-1330 (Fed. Cir. 2003). These cases, read together, direct a trial court to award attorney fees to a prevailing party where, for instance, either party initially asserts or continues to assert positions in a knowingly, recklessly, or grossly negligent manner. This assessment is the same whether the issue is the validity or infringement of the patent.

Implicit in this interpretation is that a losing patentee is subject to a two-part standard to determine whether it litigated in bad faith in view of *Eltech*. First, the patentee's infringement assertion is objectively evaluated for reasonableness. Second, if the claim is objectively unreasonable, the patentee's own conduct in pursuing an unreasonable infringement assertion is evaluated for reasonableness. This second step involves an objective analysis of the patentee's conduct, as *Eltech* held that a patentee's grossly negligent or reckless pursuit of an unreasonable infringement claim was litigating in bad faith. *Eltech*, 903 F.2d at 811.

In *Farmer v. Brennan*, this Court noted that "[t]he civil law generally calls a person reckless who acts or (if the person has a duty to act) fails to act in the face of an unjustifiably high risk of harm that is either known or so obvious that it should be known." 511 U.S. 825, 836 (1994). This Court, in *Baltimore & P. R. Co. v. Jones*, defined negligence as "the failure to do what a reasonable and prudent person would ordinarily have done under the circumstances of the situation, or doing what such a person under the existing circumstances would not have done." 95 U.S. 439, 441-42 (1877) As a finding of recklessness or gross negligence requires a court to compare a patentee's conduct to that of a reasonable person, determining whether a patentee's conduct was reasonable is an objective inquiry under *Eltech*.

C. THE FEDERAL CIRCUIT APPLIES A SUBJECTIVE/OBJECTIVE STANDARD IN OTHER CASES

The Federal Circuit attempted to describe the circumstances in which a prevailing party may recover attorney fees under section 285 in 2005. However, in doing so, the Federal Circuit deviated from *Eltech* by creating a much more exacting, rigid test for determining whether a patentee litigated in bad faith. In *Brooks Furniture Manufacturing, Inc. v. Dutailier International, Inc.*, the Federal Circuit held that "[a]bsent misconduct in conduct of the litigation or in securing the patent, sanctions may be imposed against the patentee only if both (1) the litigation is brought in subjective bad faith, and (2) the litigation is objectively baseless." 393 F.3d 1378, 1381 (Fed. Cir. 2005) (citing *Professional Real Estate Investors v. Columbia Pictures Industries*, 508 U.S. 49, 60-61 (1993)).

The two-part standard articulated in *Brooks Furniture* introduced a subjective inquiry into the analysis of bad faith litigation not previously necessary for a court to award attorney fees to a prevailing accused infringer. This Court has interpreted "subjective intent" as equivalent to the "actual motivations" of an individual. *See Whren v. United States*, 517 U.S. 806, 813 (1996). Read plainly, the *Brooks Furniture* standard significantly increases the burden on a prevailing accused infringer seeking fees. Under *Brooks Furniture*, a prevailing accused infringer must demonstrate not only that the losing patentee's infringement assertion was objectively baseless, but also that the patentee knew or intended this and proceeded with the litigation anyway.

Interpretation of this inquiry is initially perplexing due to the Federal Circuit's reliance on *Professional Real Estate* ("*PRE*"). *PRE* did not involve construing section 285 or even patents. Rather, *PRE* outlined the non-statutory "sham litigation" exception to the *Noerr-Pennington* antitrust immunity doctrine. *PRE*, 508 U.S. at 60-61 ("First, the lawsuit must be objectively baseless...[and if so,] the court should focus on whether the baseless lawsuit conceals an attempt to interfere directly with the business relationships of a competitor through the use of the governmental process." (quotations, citations, and emphasis omitted)). In response to "confusion" by the circuit courts, *PRE* construed under what circumstances filing of a lawsuit could be considered merely an "anticompetitive weapon," instead of a rightful petition to the government for redress of an alleged wrong. *Id.* In *Brooks Furniture*, the Federal Circuit

did not explain why it shoehorned antitrust law regarding sham litigation, with its own precedent and statutory basis, into interpreting how section 285 should apply to prevailing defendants. Given this lack of guidance, district courts have struggled to apply *Brooks Furniture*. (*See infra*, § III).

The creation of the *Brooks Furniture* standard by the Federal Circuit is also confusing in light of the opinion's incorporation of the language from *Eltech* (holding gross negligence or recklessness by a patentee in pursuing an unreasonable assertion of infringement could support a finding of bad faith), through its reliance on *Forest Labs*. *Brooks Furniture*, 508 U.S. at 1381 (citing *Forest Labs.*, 339 F.3d at 1330).

In contrast to the situation for a prevailing accused infringer, for a prevailing patentee, a finding of willful infringement alone has long been a sufficient basis for a trial court to make an exceptional case determination under section 285. *E.g.*, *Modine Mfg. Co. v. Allen Group Inc.*, 917 F.2d 538, 543 (Fed. Cir. 1990) ("An express finding of willful infringement is a sufficient basis for classifying a case as 'exceptional'."). If a trial court finds willful infringement but does not award attorney fees, the court must explain why the case was deemed unexceptional under section 285. *S.C. Johnson & Son, Inc. v. Carter-Wallace, Inc.*, 781 F.2d 198, 201 (Fed. Cir. 1986).

The Federal Circuit subsequently set forth a two-part standard under which prevailing patentees could demonstrate willful infringement in *Seagate*. In *Seagate*, the court held that "to establish willful infringement, a patentee must show by clear and

convincing evidence that the infringer acted despite an objectively high likelihood that its actions constituted infringement of a valid patent." 497 F.3d at 1371 (emphasis added). The court continued:

> The state of mind of the accused infringer is not relevant to this objective inquiry. If this threshold objective standard is satisfied, the patentee must also demonstrate that this objectively-defined risk (determined by the record developed in the infringement proceeding) was either known or so obvious that it should have been known to the accused infringer.

Id.

D. PREVAILING ACCUSED INFRINGERS ARE SUBJECT TO THE HIGHER BURDEN OF THE SUBJECTIVE/OBJECTIVE STANDARD

Both *Brooks Furniture* and *Seagate* provide prevailing patent litigants with means by which fees may be awarded under section 285. Absent litigation misconduct, prevailing patentees can demonstrate willful infringement by an infringer by showing the infringer satisfies the two-part objective standard in *Seagate*. Similarly, absent litigation misconduct or misconduct in securing the patent, prevailing accused infringers can demonstrate that a patentee pursued objectively baseless litigation in subjective bad faith under the two-part standard in *Brooks Furniture*.

The difference in these two standards is that a prevailing accused infringer must demonstrate

subjective bad faith, which, when read plainly, implies that a prevailing accused infringer must show a patentee intended to conduct, or knew it was conducting objectively baseless litigation. A prevailing patentee, however, need only demonstrate an infringer knew or should have known its activities had an objectively high likelihood of infringement. Demonstrating an infringer "should have known" its activities constituted infringement is an objective inquiry tantamount to showing recklessness. *See Seagate*, 497 F.3d at 1371.

Plainly reading the "subjective bad faith" prong of *Brooks Furniture* as requiring intent or knowledge imposes a higher burden on prevailing accused infringers to prove a case exceptional under section 285 as compared to prevailing patentees. Such a reading contravenes the holdings in *Fogerty* and in *Eltech* that section 285 is a party-neutral fee-shifting statute.

Since *Brooks Furniture* and *Seagate*, the Federal Circuit has done little to clarify the meaning of "subjective bad faith" in the context of attorney fees and sanctions. In *iLOR, LLC v. Google, Inc.*, the Federal Circuit stated that the objective baselessness prong for a prevailing accused infringer is identical to the objective recklessness standard for attorney fees that a prevailing patentee must demonstrate under *Seagate*. 631 F.3d 1372, 1377 (Fed. Cir. 2011). While the Federal Circuit clarified that both prevailing patentees and accused infringers can demonstrate objective baselessness in the same, party-neutral way, the court also continued to require that under the test in *Brooks Furniture* "the plaintiff's case must have no objective foundation, and the plaintiff must actually know this." *Id.* The

Federal Circuit continued to maintain that prevailing patentees need only show an infringer "knew or should have known" their conduct had an objectively high risk of infringement. *Id.*

The following year, the Federal Circuit seemingly contradicted itself in *Highmark, Inc. v. Allcare Health Management Systems, Inc.*, holding "[the] same objective/subjective standard applies for both patentees asserting claims of infringement and alleged infringers defending against claims of infringement." 687 F.3d 1300, 1309 (Fed. Cir. 2012), *cert. granted*, 134 S. Ct. 48 (2013). Later in the opinion, the court, citing *Seagate*, held that a claim is brought in subjective bad faith when "the objective unreasonableness of the claim 'was either known or so obvious that it should have been known' by the patentee." *Id.* at 1312.

The irreconcilable language from *iLOR* and *Highmark* embodies the inconsistency of the Federal Circuit's own interpretation of section 285. What is clear is that trial courts, depending on which opinions from the Federal Circuit they rely on, have the latitude to apply an inequitable, harsher standard to prevailing accused infringers in making fee determinations. In a concurring opinion in *Raylon, LLC v. Complus Data Innovations, Inc.*, Judge Reyna noted that "[o]ur cases have not established a precise definition for 'bad faith' in the exceptional case context," and that earlier cases "discuss 'bad faith' as closely aligned with 'a finding of unfairness'." 700 F.3d 1361, 1373-74 (Fed. Cir. 2012), *cert. denied*, 134 S. Ct. 94 (2013). Judge Reyna referenced both *Eltech* and *Rohm & Haas* in his concurrence along with *Brooks Furniture*, which supports IPLAC's view that the jurisprudence

pertaining to attorney fees in the Federal Circuit needs clarification from this Court.

III. DISTRICT COURTS HAVE DEVELOPED AN INCOMPATIBLE AND INEQUITABLE BODY OF LAW DUE TO A LACK OF A CONSISTENT STANDARD

In applying the various standards articulated by the Federal Circuit for determining whether a case is exceptional, the district courts have developed an array of standards. However, these standards vary widely not only amongst themselves but also from the *Seagate* standard for awarding attorney fees to patentees.

As set out by the Federal Circuit in *Eltech* and endorsed by this Court in *Fogerty*, "there is and should be no difference in the standards applicable to patentees and infringers who engage in bad faith litigation" when determining attorney fees motions. *Eltech*, 903 F.2d at 811. The standard for patentees as set out in *Seagate* requires a showing that there was "an objectively high likelihood" that the infringer's conduct constituted patent infringement that "was either known or so obvious that it should have been known to the accused infringer." *In re Seagate*, 497 F.3d at 1371. A review of recent district court decisions awarding or refusing to award attorney fees shows not only that different standards are applied to prevailing parties, but that even among similarly situated accused infringers, standards are applied inconsistently.

The standards articulated in recent district court decisions range from an "exacting standard," requiring that a plaintiff's infringement assertion be

objectively baseless and that the plaintiff actually knew this, to a standard where bringing an objectively baseless suit against an accused infringer is in itself sufficient for a court to deem the case exceptional. *Compare Vistan Corp. v. Fadei, USA, Inc.*, No. C-10-04862, 2013 WL 1345023, at *1 (N.D. Cal. Apr. 2, 2013) (quoting *iLOR*, 631 F.3d at 1377), *rev'd on other grounds*, Nos. 2013-1216, 2013-1217, 2013 WL 6231725 (Fed. Cir. Dec. 3, 2013), *with MarcTec, LLC v. Johnson & Johnson*, No. 07-cv-825, 2010 WL 680490, at *10 (S.D. Ill. Feb. 23, 2010), *aff'd*, 664 F.3d 907 (Fed. Cir. 2012).

Two principles are clear from the district court decisions. First, different standards are being used for similarly situated accused infringers. Second, in many instances, accused infringers are subject to higher standards than patentees seeking fees. Within this diverse range lie a number of differently articulated standards where district courts simply pick and choose language from Federal Circuit opinions to support their decision. These decisions by the district courts illustrate that the district courts have tremendous difficulty grappling with the Federal Circuit precedent.

Some courts, such as the Eastern District of Michigan, in *Automotive Technologies International, Inc. v. Siemens VDO Automotive Corporation*, highlight the lack of a uniform standard under which district courts may deem a case exceptional.

In *Automotive Technologies*, the court awarded attorney fees to an accused infringer while, noting "[t]he Federal Circuit has outlined multiple formulations of what constitutes an exceptional case, and while those formulations can be read to conflict,

the better reading is that there are a number of different ways by which a case may become exceptional for § 285 purposes." 744 F. Supp. 2d 646, 650-51 (E.D. Mich. 2010). These conflicting standards present district courts with the opportunity to choose and apply one of these conflicting standards to a prevailing party.

Other courts ignore the standards articulated in *Eltech* and its progeny completely. In *Atmel Corp. v. Authentec, Inc.*, the Northern District of California declined to award attorney fees under *Brooks Furniture* where the defendant was able to show that "even accepting Plaintiff's proposed claim construction, the accused products do not infringe the patents-in-suit." 557 F. Supp. 2d 1051, 1057 (N.D. Cal. 2008). Despite this finding, the court found the defendant had failed to carry its burden of establishing that the plaintiff acted in subjective bad faith.

In *Motionless Keyboard Co. v. Microsoft Corp.*, the Oregon District Court declined to award attorney fees under *Brooks Furniture*, despite finding the patentee's claims to be objectively baseless, noting the claims "lack[ed] an objectively reasonable basis in law or fact." No. Civ. 04-180, 2005 WL 1899377, at *2 (D. Or. Aug. 5, 2005), *aff'd*, 184 F. App'x 967 (Fed. Cir. 2006). The court would not, however, deem the case exceptional without a showing of bad faith by the patentee in pursuing their claims. *Id.*

In *Vistan Corp. v. Fadei*, the Northern District of California used an "exacting standard" where the "plaintiff's case must have no objective foundation" and "the plaintiff must actually know this." 2013 WL 1345023, at *1 (quoting *iLOR*, 631 F.3d at 1377).

Despite the court's earlier claim construction ruling rejecting the plaintiff's proffered interpretation — and the plaintiff's continued pursuit of the case in spite of the ruling — the defendants did not meet "their high burden to show by clear and convincing evidence [the] suit was brought frivolously." *Id.* at *2. Ultimately, the court concluded there was no evidence of bad faith on the part of the patent owner. *Id.* The use of this exacting standard ignores the tests set out in *Eltech* and *Highmark* by requiring a showing the Plaintiff knew there was no objective foundation as opposed to the "knew or should have known" standard.

Atmel and *Motionless Keyboard* illustrate cases where district courts found that the suits were objectively baseless but refused to deem the cases exceptional because of insufficient evidence of subjective bad faith. These cases illustrate accused infringers being held to unreasonably high standards when compared to the Federal Circuit standard for patentees seeking attorney fees. *Vistan* further supports this position by requiring accused infringers to show that the case had no objective foundation and the patentee actually knew that it had no objective foundation.

The standards set by *Atmel, Motionless Keyboard,* and *Vistan* create a burden for prevailing accused infringers that is almost impossible to overcome. The standard illustrated in these cases is considerably higher than the standard set out in *Seagate.* Take for example *Midtronics, Inc. v. Aurora Performance Products LLC,* where the Northern District of Illinois awarded fees to a patentee upon a showing of objective recklessness. 800 F. Supp. 2d

970 (N.D. Ill. 2011). The *Midtronics* court, citing *Seagate* and *iLOR*, noted it was unnecessary to explore the defendant's state of mind in determining whether attorney fees were appropriate. *Id.* at 974, n.5. This comparison illustrates a clear inequality between prevailing patentees and prevailing accused infringers. A prevailing patentee was granted attorney fees without so much as considering the accused infringer's state of mind while a prevailing accused infringer is forced to establish a patent owner's state of mind.

The different formulations used by courts not only create a confusing body of law, but the decisions are frequently and unfairly adverse to prevailing accused infringers. The result is an imbalance in the treatment of prevailing accused infringers compared to prevailing patentees when determining whether a case is exceptional.

In the few cases where accused infringers have successfully argued that a case was exceptional, courts have not used the subjective bad faith standard promulgated by the Federal Circuit in *Brooks Furniture* and *iLOR*.

For example, in *MarcTec*, the Southern District of Illinois awarded fees to an accused infringer based solely on a finding that the patentee brought a baseless or frivolous suit. 2010 WL 680490, at *10. Relying on *Eltech*, the *MarcTec* court inferred bad faith on the part of the patentee where the patentee unreasonably relied on mischaracterizations of the court's claim construction in pursuing its infringement action. *Id.* at *9-10. The court ignored the *Brooks Furniture* language. Ultimately, the Federal Circuit upheld the award of fees, and failed

to criticize the *MarcTec* district court for its assertion that no explicit showing of subjective bad faith was required. *MarcTec, LLC v. Johnson & Johnson*, 664 F.3d 907, 916-919 (Fed. Cir. 2012).

In other cases where accused infringers have been awarded attorney fees, district courts have purported to require a showing of subjective bad faith but found that this requirement was met through an analysis of objective criteria. These courts found cases exceptional where the patentee knew or should have known the patent was invalid, or where a patentee pursued an infringement claim based on wrongful intent, recklessness, or gross negligence. *See, e.g.*, *BIAX Corp. v. NVIDIA Corp.*, No. 09-cv-01257, 2013 WL 1324935 (D. Colo. Mar. 30, 2013), *reconsideration denied*, No. 09-cv-01257, 2013 WL 4051901 (D. Colo. Aug. 12, 2013); *IA Labs CA, LLC v. Nintendo Co., Ltd.*, No. 10-833, 2012 WL 1565296 (D. Md. May 1, 2012), *aff'd*, 515 F. App'x 892 (Fed. Cir. 2013); *Veteran Med. Prods. v. Bionix Dev. Corp.*, No. 1:05-cv-655, 2009 WL 891724 (W.D. Mich. Mar. 31, 2009).

Because of inconsistent standards, accused infringers face uncertainty in predicting which standard will be employed in their case. Depending on the jurisdiction, the standard for awarding attorney fees may or may not require a showing of subjective bad faith, and the evidence required to show bad faith may also vary. Without direction to the Federal Circuit and the district courts as to a correct and consistent standard for determining whether a case is exceptional, defendants cannot accurately assess the likelihood of recouping fees spent defending a frivolous litigation claim.

IV. THE LEGISLATIVE HISTORY AND CASE LAW RELATING TO SECTION 285 ESTABLISH THAT PREVAILING ACCUSED INFRINGERS MAY DEMONSTRATE EXCEPTIONALITY UNDER A STANDARD ANALAGOUS TO THAT SET FORTH IN SEAGATE

The decisions in *Brooks Furniture* and *Seagate* lead to two possible interpretations of the requirements under section 285: (1) *Brooks Furniture* sets out an exceptional case standard for a prevailing accused infringer that requires showing a subjective element (knowledge or intent) that is not required in the two-part willful infringement standard under *Seagate*; or, (2) the exceptional case standard under *Brooks Furniture* is analogous to the two-part willful infringement standard under *Seagate*, requiring that a prevailing accused infringer demonstrate the patentee's "subjective bad faith" by showing the patentee engaged in knowing, reckless, or grossly negligent behavior in pursing an objectively unreasonable action. Amicus respectfully urges this Court to provide the latter standard of section 285 so that the section is applied to both parties evenhandedly as the case-law and legislative history relating to section 285 suggest.

Amicus respectfully submits that both the legislative history and case law surrounding section 285 strongly support that the standards for bad faith litigation by a patentee and willful infringement should be equivalent and in the form of the standard in *Seagate*. The legislative history of section 285 as outlined by the Federal Circuit in *Rohm & Haas* indicates that section 285 is a broadly-written, party-neutral standard designed to prevent gross injustice

to a prevailing party. 736 F.2d at 691-92. Bad faith conduct by a party is one situation which could render a case exceptional for both prevailing parties. *Id.*

The Federal Circuit held in *Eltech* that the standard for making a bad faith determination was the same for both parties, and that grossly negligent or reckless conduct by a party was sufficient for a trial court to find bad faith. *See* 903 F.2d at 811. Recently, the Federal Circuit held the same standard applies for determining willful infringement or bad faith litigation by a patentee. *Highmark*, 687 F.3d at 1309. If the standards are indeed the same, then interpreting the *Brooks Furniture* standard to require a showing of knowledge or intent on the part of a patentee in pursuing objectively baseless litigation would disregard the evenhandedness of section 285 contemplated by *Rohm & Haas* and *Eltech*.

Prevailing accused infringers cannot experience a party-neutral application of section 285 at the trial court level unless this Court addresses the two-part standard in *Brooks Furniture*, particularly the prong requiring "subjective bad faith." Amicus respectfully submits that the standard for a case to be exceptional should require a prevailing accused infringer demonstrate: (1) the patentee sued in spite of the objectively high likelihood that the accused infringer's conduct did not constitute patent infringement, and (2) the patentee knew or should have known that the accused infringer's conduct did not constitute patent infringement and/or the patent was invalid. Such a standard is analogous to the two-part willful infringement standard in *Seagate* available to prevailing patentees. This standard

would provide prevailing accused infringers the fair opportunity to be reimbursed for the injustice of spending fees to defend against claims with an objectively high likelihood of being meritless.

V. COURTS ALREADY EMPLOY A PARTY-NEUTRAL STANDARD TO AWARD ATTORNEY FEES IN COPYRIGHT AND TRADEMARK CONTEXTS

Copyright and trademark case law both support using a party-neutral standard in determining whether to award attorney fees.

A. COPYRIGHT ACTIONS HAVE A PARTY-NEUTRAL STANDARD

This Court explicitly endorsed a party-neutral standard for awarding attorney fees to prevailing parties in copyright infringement actions. *Fogerty*, 510 U.S. at 534 ("Prevailing plaintiffs and prevailing defendants are to be treated alike."). This Court considered and rejected a "dual standard."

First, the language of the copyright fee-shifting statute, 17 U.S.C. § 505, is neutral: "the court may . . . award a reasonable attorney's fee to the prevailing party as part of the costs." Section 505 provided "no hint" that differential treatment of plaintiffs and defendants was warranted; neither did the legislative history. *Id.* at 522-24. Neutral language and a paucity of legislative history supporting a dual standard aptly describe 35 U.S.C. § 285 as well. (*See supra*, § II.A.) "[F]ee-shifting statutes' similar language is a strong indication that they are to be interpreted alike." *Fogerty*, 510 U.S at 523 (internal quotations omitted). This holds

particularly true when the "goals and objectives" of two underlying Acts are highly similar, as they are here. *See id.* at 524. The *Fogerty* Court even describes section 285 as "closely related" to the copyright fee-shifting statute and "support[ing] a party-neutral approach." *Id.* at 525, n.12.

Second, just as in patent infringement actions, there are no stereotypical plaintiffs and defendants in copyright infringement actions. "Entities which sue for copyright infringement as plaintiffs can run the gamut from corporate behemoths to starving artists; the same is true of prospective copyright infringement defendants." *Id.* at 524 (internal citations omitted).

Therefore, unlike in other fields, there is no strong policy reason to favor plaintiffs over defendants or vice versa in patent litigation. *See, e.g., id.* (endorsing the dual standard in the fee-shifting statute of Title VII of the Civil Rights Act of 1964 because impecunious civil rights plaintiffs require incentive to bring meritorious claims). *Fogerty* supports party-neutral application of 35 U.S.C. § 285.

B. IN TRADEMARK ACTIONS, MANY CIRCUITS APPLY A PARTY-NEUTRAL STANDARD

In the trademark arena, section 1117(a) of the Lanham Act in an identical manner to section 285 of the Patent Act provides, that the "court in exceptional cases may award reasonable attorney fees to the prevailing party." 15 U.S.C. § 1117(a). Six regional circuits (First, Second, Third, Eighth, Ninth and Eleventh) have interpreted the Lanham Act's attorney fee-shifting statute to be party-neutral

in its application. For instance, the Second Circuit held that no case within its circuit "indicates that a different standard [under section 1117(a)] should apply for prevailing plaintiffs and prevailing defendants." *Conopco, Inc. v. Campbell Soup Co.*, 95 F.3d 187, 195 (2d Cir. 1996). That sentiment is echoed by the Third Circuit: "the language of [section 1117(a)] authorizing attorney's fees to the prevailing party in the discretion of the court is the same for defendants as well as plaintiffs." *Securacomm Consulting, Inc. v. Securacom Inc.*, 224 F.3d 273, 280 (3d Cir. 2000).

Two circuits concentrate on a single standard, implicitly indicating its party-neutral nature. In the Eighth Circuit, "an exceptional case within the meaning of [section 1117(a)] is one in which one party's behavior went beyond the pale of acceptable conduct," *Aromatique, Inc. v. Gold Seal, Inc.*, 28 F.3d 863, 877 (8th Cir. 1994), whereas the Eleventh Circuit simply recites its standard, requiring fraudulent or bad faith conduct by the losing party for a prevailing party to be eligible for attorney fees. *See Lipscher v. LRP Publications, Inc.*, 266 F.3d 1305, 1320 (11th Cir. 2001).

Still, other circuits are considered to have a party-neutral standard for awarding attorney fees under section 1117(a). In *Nightingale Home Healthcare v. Anodyne*, the Seventh Circuit noted that the fee-shifting standards used by the First and Ninth Circuits "do not distinguish between prevailing plaintiffs and prevailing defendants." 626 F. 3d 958, 960-1 (7th Cir. 2010) (citing *Tamko Roofing Prods., Inc. v. Ideal Roofing Co.*, 282 F.3d 23, 32 (1st Cir. 2002) and *Stephen W. Boney, Inc. v.*

Boney Services, Inc., 127 F.3d 821, 827 (9th Cir. 1997), respectively).

C. SOME CIRCUITS EVEN APPLY A LOWER STANDARD FOR PREVAILING DEFENDANTS IN TRADEMARK ACTIONS

A few circuit courts (D.C., Fourth and Tenth) apply the trademark fee-shifting statute in a party-sensitive manner, in which the burden of proof for prevailing defendants is *lower* than for prevailing plaintiffs. That situation is the exact opposite of the application of section 285 in some patent cases.

For example, the D.C. Circuit requires "willful or bad faith infringement by the defendant in order to award attorney's fees to the plaintiff...[whereas] a defendant need not show that a plaintiff brought an action in bad faith to obtain attorney's fees." *Reader's Digest Ass'n, Inc. v. Conservative Digest, Inc.*, 821 F.2d 800, 808 (D.C. Cir. 1987) (citing *Noxell Corp. v. Firehouse No. 1 Bar-B-Que Restaurant*, 771 F.2d 521, 526, n.2 (D.C. Cir. 1985). The Fourth Circuit held that while a prevailing plaintiff seeking attorney fees must show "that the defendant acted in bad faith," a prevailing defendant can "qualify for an award of attorney fees upon a showing of something less than bad faith by the plaintiff." *Retail Services Inc. v. Freebies Publishing*, 364 F.3d 535, 550 (4th Cir. 2004) (internal quotations omitted). To find an "exceptional" case, the Tenth Circuit requires plaintiffs to show "defendant's acts of infringement are in bad faith," while a defendant must only show the plaintiff's lawsuit's "lack of any foundation," "the unusually vexatious and oppressive manner in which it is prosecuted," or even "other reasons as well."

Nat'l Ass'n of Prof'l Baseball Leagues, Inc. v. Very Minor Leagues, Inc., 223 F.3d 1143, 1147-8 (10th Cir. 2000).

The state of 35 U.S.C. § 285 jurisprudence, post-*Brooks Furniture*, compels courts in patent actions to do the exact *opposite* of the requirements in the D.C., Fourth and Tenth Circuits for trademark actions. In patent actions, the prevailing defendants, i.e. accused infringers, are required to show subjective bad faith by the patentee but no such showing is required by a prevailing patentee.

To harmonize these disparate approaches toward awarding attorney fees in similar fields of law, and to better align the patent approach with its statutory basis, a consistent, party-neutral standard should be applied in patent cases, as with copyright and trademark cases.

VI. A CONSISTENT AND PARTY-NEUTRAL STANDARD FOR AWARDING ATTORNEY FEES TO PREVAILING ACCUSED INFRINGERS SHOULD BE ARTICULATED BEFORE DETERMINING A STANDARD OF REVIEW

This Court has granted a petition for a writ of certiorari in *Highmark, Inc. v. Allcare Health Management Systems, Inc.* to decide the appropriate standard of review for a decision to grant attorney fees to a prevailing accused infringer. 134 S. Ct. 48 (2013). The district court in *Highmark* awarded attorney fees to the prevailing accused infringer under section 285 after finding the case was objectively baseless and brought in bad faith. 706 F. Supp. 2d 713 (N.D. Tex. 2010), *order vacated on*

reconsideration, 732 F. Supp. 2d 653 (N.D. Tex. 2010), *aff'd in part, rev'd in part*, 687 F.3d 1300 (Fed. Cir. 2012). Upon a *de novo* review, the Federal Circuit partially overturned the decision to award attorney fees. *Highmark*, 687 F.3d 1300 (Fed. Cir. 2012) cert. granted, 134 S. Ct. 48 (U.S. 2013). In overturning the decision to award attorney fees, the Federal Circuit gave no deference to the district court's objective baselessness determination. *Id.* at 1309. The question before this Court in *Highmark* is whether a district court's exceptional case finding under section 285 based is entitled to deference on appeal.

Amicus respectfully urges this court to first articulate a consistent and party-neutral standard to be used in awarding attorney fees to prevailing accused infringers before deciding the appropriate level of review. As shown in this brief, the Federal Circuit and district courts have inconsistently and inequitably articulated multiple standards for whether fees should be awarded to a prevailing accused infringer. Until these inconsistencies are resolved and a single exceptional case standard is articulated, amicus respectfully submits that considering the standard of review to be applied to an attorney fee award may be premature. A clarification as to what showing is required by an accused infringer would be relevant in the determination of how the showing itself would be reviewed—whether it be deferential or *de novo*.

CONCLUSION

For the foregoing reasons, amicus curiae, the Intellectual Property Law Association of Chicago,

urges this Court to establish a consistent and party-neutral standard, analogous to the party-neutral willful infringement standard in *Seagate*, for the determination of when a case is exceptional and thereby eligible for an award of attorney fees to the prevailing party in patent litigation.

Respectfully submitted,

JOHN M. AUGUSTYN*
JEFFREY B. BURGAN
LEYDIG, VOIT & MAYER, LTD.
TWO PRUDENTIAL PLAZA
180 N. STETSON AVE.
SUITE 4900
CHICAGO, IL 60601
(312) 616-5600
JAUGUSTYN@LEYDIG.COM

BRENT A. HAWKINS,
PRESIDENT
THE INTELLECTUAL PROPERTY LAW ASSOCIATION OF CHICAGO
P.O. BOX 472
CHICAGO, IL 60690
(312) 984-7764

Of Counsel:
CHARLES W. SHIFLEY
BANNER & WITCOFF, LTD.
10 SOUTH WACKER DRIVE
SUITE 3000
CHICAGO, IL 60606
(312) 463-5000

Counsel for Amicus Curiae
The Intellectual Property Law Association of Chicago

December 9, 2013

* Counsel of Record

AMICUS CURIAE BRIEF

RECORD AND BRIEFS

No. 12-1184

IN THE

Supreme Court of the United States

OCTANE FITNESS, LLC,

Petitioner,

v.

ICON HEALTH & FITNESS, INC.,

Respondent.

ON WRIT OF CERTIORARI TO THE UNITED STATES COURT OF APPEALS FOR THE FEDERAL CIRCUIT

BRIEF OF INTELLECTUAL PROPERTY OWNERS ASSOCIATION IN SUPPORT OF PETITIONER

Of counsel:

RICHARD F. PHILLIPS,
President
KEVIN H. RHODES,
Chair, Amicus Brief Committee
INTELLECTUAL PROPERTY OWNERS ASSOCIATION
1501 M Street, NW
Suite 1150
Washington, DC 20005
(202) 507-4500

PAUL H. BERGHOFF
Counsel of Record
ERIN R. WOELKER
MCDONNELL BOEHNEN HULBERT & BERGHOFF LLP
300 South Wacker Drive
Chicago, Illinois 60606
(312) 913-0001
berghoff@mbhb.com

Counsel for Amicus Curiae

250481

COUNSEL PRESS
(800) 274-3321 • (800) 359-6859

Library of Congress
Law Library

TABLE OF CONTENTS

Page

TABLE OF CONTENTS i

TABLE OF CITED AUTHORITIES ii

INTEREST OF *AMICUS CURIAE* 1

SUMMARY OF ARGUMENT 2

ARGUMENT 5

I. The Test for Whether a Case is "Exceptional" Under 35 U.S.C. § 285 Should Be Applied Equally To Prevailing Patentees and Prevailing Accused Infringers 5

II. In the Context of Positions Taken in Litigation, Whether a Case is "Exceptional" Under 35 U.S.C. § 285 Should Turn Only on Whether the Position(s) Taken by the Nonprevailing Party Were Objectively Unreasonable, and Not On Any Subjective Intent 7

A. Under Similar Fee-Shifting Statutes Objective Unreasonableness Alone is Sufficient to Award Fees 8

B. Federal Courts Have the Inherent Power to Grant Fees in Cases of Bad Faith Intent 9

CONCLUSION 10

APPENDIX 1a

TABLE OF CITED AUTHORITIES

Page

CASES

Beckman Instruments, Inc. v. LKB Produkter AB, 892 F.2d 1547 (Fed. Cir. 1989) 2

Brooks Furniture Mfg., Inc. v. Dutailier Int'l, Inc., 393 F.3d 1378 (Fed. Cir. 2005) 3, 7

Christiansburg Garment Co. v. EEOC, 434 U.S. 412 (1978) 2, 8, 6

Dominant Semiconductors Sdn. Bhd. v. OSRAM GmbH, 524 F.3d 1254 (Fed. Cir. 2008) 7-8

Eddington v. Fitzmaurice, 29 Ch. Div. 459 (1885) 6

Fogerty v. Fantasy, Inc., 510 U.S. 517 (1994) 6

Golan v. Pingel Enter., Inc., 310 F.3d 1360 (Fed. Cir. 2002) 5, 6

Highmark, Inc. v. Allcare Health Management Systems, Inc., 687 F.3d 1300 (Fed. Cir. 2012) 5

iLOR, LLC v. Google, Inc., 631 F.3d 1372 (Fed. Cir. 2011) 3, 5

Cited Authorities

Page

MarcTec, LLC v. Johnson & Johnson,
664 F.3d 907 (Fed. Cir. 2012) 10

Martin v. Franklin Capital Corp.,
546 U.S. 132 (2005).....9, 11

Newman v. Piggie Park Enterprises,
390 U.S. 400 (1968).....9, 10

Old Reliable Wholesale, Inc. v. Cornell Corp.,
635 F.3d 539 (Fed. Cir. 2011) 3

Professional Real Estate Investors v. Columbia Pictures Industries, Inc.,
508 U.S. 49 (1993).....3

Standard Oil Co. v. American Cyanamid Co.,
774 F.2d 448 (Fed. Cir. 1985) 2-3

U.S. Postal Serv. Bd. of Governors v. Aikens,
460 U.S. 711 (1983).....5

Virtue v. Creamery Package Mfg. Co.,
227 U.S. 8 (1913).....5

STATUTES

17 U.S.C. § 505.....5, 6

35 U.S.C. § 285..... *passim*

Page

OTHER AUTHORITIES

American Intellectual Property Law Association, *Report of the Economic Survey 2013* (2013) 2

6 Moore's Federal Practice 1352 (1966 ed.) 10

INTEREST OF *AMICUS CURIAE*

Amicus curiae Intellectual Property Owners Association (IPO) is a trade association representing companies and individuals in all industries and fields of technology who own or are interested in U.S. intellectual property rights.[1] IPO's membership includes more than 200 companies and a total of over 12,000 individuals who are involved in the association either through their companies or as inventor, author, executive, law firm, or attorney members. Founded in 1972, IPO represents the interests of all owners of intellectual property. IPO regularly represents the interests of its members before Congress and the USPTO and has filed amicus curiae briefs in this Court and other courts on significant issues of intellectual property law. The members of IPO's Board of Directors, which approved the filing of this brief, are listed in the appendix.[2]

IPO submits this brief in support of Petitioner to emphasize the important role that 35 U.S.C. § 285 should play, if properly interpreted and applied, for intellectual property owners in providing disincentives to the assertion and maintenance of baseless claims and defenses in patent litigation.

---

1. No counsel for a party authored this brief in whole or in part, and no such counsel or party made a monetary contribution intended to fund the preparation or submission of this brief. No person other than the *Amicus Curiae* or its counsel made a monetary contribution to its preparation or submission. The parties have consented to the filing of this brief.

2. IPO procedures require approval of positions in briefs by a two-thirds majority of directors present and voting.

SUMMARY OF ARGUMENT

The Patent Act provides that the court in "exceptional cases may award reasonable attorney fees to the prevailing party." 35 U.S.C. § 285. One critical role of fee shifting statutes, such as Section 285, is to prevent abuse of the legal system by providing an incentive for parties to assert and maintain only legitimate claims and defenses.[3] As such, it is important that the bar for fee-shifting not be set too high. And since patent litigation fees and expenses can range from $700,000 to $5 million (or more), it is also important that fee-shifting be handled in a fair and evenhanded manner.[4]

Under Federal Circuit precedent, willful infringement, inequitable conduct before the United States Patent and Trademark Office, misconduct during litigation, vexatious or unjustified litigation, and the bringing or maintenance of a frivolous suit or frivolous arguments are sufficient to form the basis of an exceptional case finding. *Beckman Instruments, Inc. v. LKB Produkter AB*, 892 F.2d 1547, 1551 (Fed. Cir. 1989) (citing *Standard Oil Co. v. American*

---

3. In interpreting the fee-shifting provision of § 706(k) of the Civil Rights Act of 1964, the Court identified "protect[ing] defendants from burdensome litigation having no legal or factual basis" as a legitimate purpose for awarding fees to successful defendants. *Christiansburg Garment Co. v. EEOC*, 434 U.S. 412, 420 (1978). A review of the legislative debates indicated that allowance of awards to defendants would serve "to deter the bringing of lawsuits without foundation," "to discourage frivolous suits," and "to diminish the likelihood of unjustified suits being brought." *Id.* (citations omitted).

4. American Intellectual Property Law Association, *Report of the Economic Survey 2013*, 34 (2013).

Cyanamid Co., 774 F.2d 448, 455 (Fed. Cir. 1985)). This Court has yet to address the types of conduct that rise to the level of an "exceptional case" under Section 285.

At issue in this case is the standard for determining when positions taken by a nonprevailing party in litigation should result in fee shifting under the Patent Act. According to the Federal Circuit, in order to support an exceptional case finding, the position(s) of the sanctioned party must be both (1) objectively unreasonable, and (2) asserted in subjective bad faith. *See, e.g.*, *Brooks Furniture Mfg., Inc. v. Dutailier Int'l, Inc.*, 393 F.3d 1378, 1381 (Fed. Cir. 2005)[5]; *Old Reliable Wholesale, Inc. v. Cornell Corp.*, 635 F.3d 539, 543-44 (Fed. Cir. 2011); *iLOR, LLC v. Google, Inc.*, 631 F.3d 1372, 1377 (Fed. Cir. 2011). IPO believes that the Federal Circuit's requirement

---

5. In establishing this two-part test in *Brooks*, the Federal Circuit found support in *Professional Real Estate Investors v. Columbia Pictures Industries, Inc.*, 508 US 49 (1993). However, the present case is distinguishable from *Professional Real Estate*, which evaluated when a case can be considered a "sham" within meaning of the *Noerr-Pennington* doctrine, which provides immunity from antitrust liability to a party that petitions the government for redress. *Id.* at 56. Sham litigation is characterized as "private action that is not genuinely aimed at procuring favorable government action," as opposed to "a valid effort to influence government action." *Id.* at 58. As such, whether a case is a "sham" under the doctrine requires an inquiry into both "objective baselessness" of the lawsuit and "the litigant's subjective motivation." *Id.* at 60-61. However, the present case does not involve a question of the First Amendment right to petition the government for redress, nor liability for exercising that right as in *Professional Real Estate*. Rather, it is solely a question of payment of legal fees and does not raise the constitutional issues underpinning the *Noerr-Pennington* doctrine.

that a prevailing party prove that its opponent brought its case, or asserted its defenses, in "subjective bad faith" sets the fee-shifting bar too high. Instead, IPO believes that an "exceptional case" for purposes of 35 U.S.C. § 285, when the issue is the litigation positions taken by the nonprevailing party, should require only objective baselessness. IPO believes that the "exceptional case" inquiry should not turn on the subjective intent of the nonprevailing party but should instead focus on whether the position(s) taken by the losing party were objectively baseless or unreasonable.

In addition to setting the threshold for an exceptional case finding at an appropriate level, IPO believes that focusing the inquiry on whether the position(s) taken by the losing party were objectively baseless will ensure that both prevailing patent holders and prevailing accused infringers will be treated consistently, as the language of Section 285 requires. While the Federal Circuit has stated that the requirements for an exceptional case finding are the same for both prevailing patent holders and prevailing accused infringers under its two-part test, IPO believes that this is not the case. In particular, where a prevailing accused infringer requests its attorney's fees on the grounds that the plaintiff brought or maintained a frivolous suit, Federal Circuit law currently presumes that the patent holder brought its claims in good faith. This presumption sets up a one-sided hurdle to prevailing accused infringers seeking recovery of their attorney's fees. Nonprevailing accused infringers, on the other hand, are afforded no such presumption. IPO believes that the standard for "exceptional case" under 35 U.S.C. § 285 should apply equally to prevailing plaintiffs and defendants, as it would if the inquiry were focused on

whether the position(s) taken by the losing party were objectively baseless.

ARGUMENT

I. The Test for Whether a Case is "Exceptional" Under 35 U.S.C. § 285 Should Be Applied Equally To Prevailing Patentees and Prevailing Accused Infringers

In cases of an alleged "frivolous suit," the Federal Circuit's exceptional case test appears to disfavor prevailing defendants. The Federal Circuit has interpreted the law of this Court to recognize "a presumption that an assertion of infringement of a duly granted patent is made in good faith." *Golan v. Pingel Enter., Inc.*, 310 F.3d 1360, 1371 (Fed. Cir. 2002) (citing *Virtue v. Creamery Package Mfg. Co.*, 227 U.S. 8, 37–38 (1913)); *see also Highmark, Inc. v. Allcare Health Management Systems, Inc.*, 687 F.3d 1300, 1309 (Fed. Cir. 2012) (citing *iLOR*, 631 F.3d at 1377). No such presumption of good faith applies to the prevailing accused infringer, however.

This presumption of good faith assertion of a patent by an unsuccessful patent owner, when a prevailing accused infringer is entitled to no such presumption, makes it more difficult for a prevailing accused infringer to recoup its fees under Section 285 in view of the Federal Circuit's two-part test requiring both objective baselessness and subjective bad faith.. Because direct evidence of intent is often absent, "subjective" bad faith or intent is notoriously difficult to prove. *See, e.g., U.S. Postal Serv. Bd. of Governors v. Aikens*, 460 U.S. 711, 716-17 (1983) (direct evidence of discriminatory intent in employment

discrimination cases will "seldom" be available) (citing *Eddington v. Fitzmaurice*, 29 Ch. Div. 459, 483 (1885) (recognizing that "it is very difficult to prove what the state of a man's mind at a particular time")). Nevertheless, the Federal Circuit has held that this presumption can only be overcome by *affirmative* evidence of bad faith. *Golan*, 310 F.3d at 1371. With this presumption in place, prevailing patentees and prevailing defendants do not stand on equal footing with respect to Section 285.

Nothing in the language of 35 U.S.C. § 285 itself nor the legislative history supports a "dual" standard for prevailing plaintiffs and defendants. Section 285 provides only that "prevailing parties" may be awarded fees and makes no distinction between patent holders or accused infringers. Nor does the Act suggest that one class of prevailing parties should be favored over another or that one party should receive the benefit of a legal presumption with regard to fees.

Indeed, interpreting the fee shifting provisions of the Copyright Act, 17 U.S.C. § 505, the Court in *Fogerty v. Fantasy, Inc.*, 510 U.S. 517, 521 (1994) looked to the relevant statutory langauge and found "no hint that successful plaintiffs are to be treated differently from successful defendants." The Court held that prevailing plaintiffs and prevailing defendants must be treated alike in awarding attorney fees under Copyright Act. The Court noted in dicta that the analogous fee shifting provision of Section 285 of the Patent Act also reflects a "party neutral approach": "federal fee-shifting statues in the patent and trademark fields . . . support a party neutral approach." 510 U.S. at 525, n.12.

The fundamental policy underlying the Patent Act—encouraging innovation—also supports an even-handed approach to fee shifting. Strong patent protection and policies supporting the enforcement of patents can drive investment in research and development and assure the capital necessary to bring market new products. Fee shifting to deter the assertion of objectively baseless infringement defenses undoubtedly furthers these interests. On the other hand, the public interest is not served by the assertion of meritless patent rights or frivolous claims of infringement that deter legitimate competition. IPO believes that fee shifting should be equally available to both prevailing patentees and accused infringers alike to strike an appropriate balance between these principles. Courts should be empowered to declare a case to be "exceptional" under Section 285 when the litigation position(s) taken by the losing party were objectively baseless, whether that party be the patent holder or the accused infringer.

II. In the Context of Positions Taken in Litigation, Whether a Case is "Exceptional" Under 35 U.S.C. § 285 Should Turn Only on Whether the Position(s) Taken by the Nonprevailing Party Were Objectively Unreasonable, and Not On Any Subjective Intent

To support a finding of exceptional case in the context of positions taken during litigation, the Federal Circuit currently requires that the nonprevailing party's litigation positions be both: (1) objectively baseless and (2) brought in subjective bad faith. *Brooks Furniture*, 393 F.3d at 1381. To be objectively baseless, "the infringement allegations must be such that no reasonable litigant could reasonably expect success on the merits." *Dominant Semiconductors*

Sdn. Bhd. v. OSRAM GmbH, 524 F.3d 1254, 1260 (Fed. Cir. 2008).

IPO believes that the test for "exceptional case" should be revised to allow for the award of fees where it is shown that the nonprevailing party's litigation positions were "objectively unreasonable," without regard to that party's subjective intent. Section 285's purpose in discouraging frivolous litigation is not being served by a test that is too difficult to meet and thus fails to adequately discourage litigants from asserting or maintaining baseless claims or defenses against competitors. Further, the Federal Circuit's two-part test, having both objective and subjective inquiries, is inconsistent with this Court's interpretation of other similar fee-shifting statutes and largely unnecessary in view of the well-established power of a federal court to award attorneys' fees against a party who has proceeded in bad faith.

A. Under Similar Fee-Shifting Statutes Objective Unreasonableness Alone is Sufficient to Award Fees

In interpreting fee-shifting statutes in other areas of the law, this Court has held that a showing of "objective unreasonableness" is sufficient to shift fees to the prevailing party, without also requiring a showing of bad faith. Of note, in *Christiansburg Garment*, this Court was confronted with the very same issue: is subjective bad faith a prerequisite to an award of attorneys' fees on the basis of meritless litigation? Ultimately, the Court interpreted the fee-shifting provisions of Title VII of the Civil Rights Act to allow a district court to award attorney's fees to a prevailing defendant "upon a finding that the plaintiff's

action was frivolous, unreasonable, or without foundation, even though not brought in subjective bad faith." *Id.* at 421.

Similarly, in *Newman v. Piggie Park Enterprises*, 390 U.S. 400 (1968), this Court held that a "subjective standard" in which a prevailing party should be awarded attorney's fees "only to the extent that the respondents' defenses had been advanced 'for purposes of delay and not in good faith'" did not properly effectuate the purposes of the counsel-fee provision of Title II of the Civil Rights Act. *Id.* at 401 (citations omitted); *see also Martin*, 546 U.S. at 141 (holding that "courts may award attorney's fees under [28 U.S.C.] § 1447(c) only where the removing party lacked an objectively reasonable basis for seeking removal," without referencing any subjective intent requirement).

The fee-shifting provisions of the Patent Act should be interpreted, in accordance with this Court's precedent, to allow for the grant of attorneys' fees to a prevailing party where the opponent asserted or maintained objectively unreasonable positions in litigation, regardless of that party's subjective intent.

B. Federal Courts Have the Inherent Power to Grant Fees in Cases of Bad Faith Intent

Further, in the context of positions taken in litigation, awarding fees under Section 285 only when a nonprevailing party's claims or defenses were brought or maintained in subjective bad faith would render the provisions of 35 U.S.C. § 285 largely unnecessary. If Congress had intended to permit the award of attorneys' fees only where the nonprevailing party acted in bad faith, no statutory provision would have been necessary. It has long been

established that a federal court may award attorneys' fees against a party who has proceeded in bad faith. *See Christainsberg*, 434 U.S. at 419; *Newman*, 390 U.S. at 402, n.4 ("If Congress' objective had been to authorize the assessment of attorneys' fees against defendants who make completely groundless contentions for purposes of delay, no new statutory provision would have been necessary, for it has long been held that a federal court may award counsel fees to a successful plaintiff where a defense has been maintained 'in bad faith, vexatiously, wantonly, or for oppressive reasons.'") (citing 6 Moore's Federal Practice 1352 (1966 ed.)). The Federal Circuit has also held that litigation misconduct alone can support fee shifting under Section 285. *See, e.g., MarcTec, LLC v. Johnson & Johnson*, 664 F.3d 907, 919 (Fed. Cir. 2012) ("[I]t is well-established that litigation misconduct and unprofessional behavior may suffice, by themselves, to make a case exceptional under § 285.") (internal quotations omitted).

Because the courts are independently empowered to award fees where a party asserts contentions in bad faith, requiring a showing of subjective bad faith when the exceptional case inquiry is premised on the losing party's litigation positions is unnecessary.

CONCLUSION

IPO urges the Court to reverse the Federal Circuit's decision below and remove the "subjective bad faith" inquiry from the exceptional case test in evaluating allegedly baseless litigation positions under 35 U.S.C. § 285. In evaluating a prevailing party's request for fees as compensation for the cost to defend against frivolous

claims or defenses, the focus should be on the opposing party's claims or defenses themselves and not on that party's subjective intent in asserting them. *Martin*, 546 U.S. at 141 (In interpreting the statute providing that an order remanding a removed case to state court may require payment of attorney fees incurred as a result of the removal, "the standard for awarding fees should turn on the reasonableness of the removal"). Additionally, the standard for "exceptional case" under Section 285 should be applied the same for all prevailing parties, plaintiffs and defendants alike.

For these reasons, IPO respectfully requests that this Court reverse the Federal Circuit's ruling.

Dated: December 9, 2013

Respectfully Submitted,

Of counsel:

RICHARD F. PHILLIPS,
President
KEVIN H. RHODES,
Chair, Amicus Brief Committee
INTELLECTUAL PROPERTY OWNERS ASSOCIATION
1501 M Street, NW
Suite 1150
Washington, DC
(202) 507-4500

PAUL H. BERGHOFF
Counsel of Record
ERIN R. WOELKER
MCDONNELL BOEHNEN HULBERT & BERGHOFF LLP
300 South Wacker Drive
Chicago, Illinois 60606
(312) 913-0001
berghoff@mbhb.com

Counsel for Amicus Curiae

APPENDIX

APPENDIX[1]

Members of the Board of Directors Intellectual Property Owners Association

Tina M. Chappell
Intel Corp.

Mark Costello
Xerox Corp.

William J. Coughlin
Ford Global Technologies LLC

Robert DeBerardine
Sanofi-Aventis

Gerald L. DePardo
The Travelers Companies, Inc.

Anthony DiBartolomeo
SAP AG

Louis Foreman
Enventys

Scott M. Frank
AT&T

Darryl P. Frickey
Dow Chemical Co.

Bernard J. Graves, Jr.
Eastman Chemical Co.

Krish Gupta
EMC Corporation

Horacio Gutierrez
Microsoft Corp.

Henry Hadad
Bristol-Myers Squibb Co.

Jack E. Haken
Koninklijke Philips N.V.

Jennifer M. Hall
Mars Inc.

Alan W. Hammond
Life Technologies Corp.

Dennis R. Hoerner, Jr.
Monsanto Co.

Carl B. Horton
General Electric Co.

Michael Jaro
Medtronic, Inc.

Philip S. Johnson
Johnson & Johnson

[1]IPO procedures require approval of positions in briefs by a two-thirds majority of directors present and voting.

Appendix

Lisa K. Jorgenson
STMicroelectronics, Inc.

Charles M. Kinzig
GlaxoSmithKline

David J. Koris
Shell International B.V.

Allen Lo
Google Inc.

Timothy F. Loomis
Qualcomm, Inc.

Steven W. Miller
Procter & Gamble Co.

Douglas K. Norman
Eli Lilly and Co.

Elizabeth A. O'Brien
Covidien

Sean O'Brien
United Technologies Corp.

Richard F. Phillips
Exxon Mobil Corp.

Dana Rao
Adobe Systems Inc.

Kevin H. Rhodes
3M Innovative Properties Co.

Mark L. Rodgers
Air Products & Chemicals, Inc.

Curtis Rose
Hewlett-Packard Co.

Matthew Sarboraria
Oracle USA Inc.

Manny Schecter
IBM Corp.

Steven J. Shapiro
Pitney Bowes Inc.

Dennis C. Skarvan
Caterpillar Inc.

Russ Slifer
Micron Technology, Inc.

Terri H. Smith
Motorola Solutions, Inc.

Daniel J. Staudt
Siemens Corp.

Brian K. Stierwalt
ConocoPhillips

Thierry Sueur
Air Liquide

James J. Trussell
BP America, Inc.

Roy Waldron
Pfizer, Inc.

Michael Walker
DuPont

BJ Watrous
Apple Inc.

Stuart L. Watt
Amgen, Inc.

Paul D. Yasger
Abbott Laboratories

Michael Young
Roche, Inc.

AMICUS CURIAE BRIEF

No. 12-1184

RECORD AND BRIEFS

Supreme Court, U.S.
FILED
DEC - 9 2013
OFFICE OF THE CLERK

IN THE

Supreme Court of the United States

OCTANE FITNESS, LLC,

Petitioner,

v.

ICON HEALTH & FITNESS, INC.,

Respondent.

ON WRIT OF CERTIORARI TO THE UNITED STATES COURT OF APPEALS FOR THE FEDERAL CIRCUIT

BRIEF OF NEW YORK INTELLECTUAL PROPERTY LAW ASSOCIATION AS *AMICUS CURIAE* IN SUPPORT OF NEITHER PARTY

ANTHONY F. LO CICERO
President-Elect, NEW YORK INTELLECTUAL PROPERTY LAW ASSOCIATION
CHARLES R. MACEDO*
Co-Chair of Amicus Briefs Committee, NEW YORK INTELLECTUAL PROPERTY LAW ASSOCIATION
AMSTER, ROTHSTEIN & EBENSTEIN LLP
90 Park Avenue
New York, NY 10016
(212) 336-8000
cmacedo@arelaw.com

ROBERT M. ISACKSON
Co-Chair of Amicus Briefs Committee, NEW YORK INTELLECTUAL PROPERTY LAW ASSOCIATION
ORRICK, HERRINGTON & SUTCLIFFE LLP
51 West 52nd Street
New York, NY 10019
(212) 506-5000

Counsel for Amicus Curiae New York Intellectual Property Law Association

Counsel of Record

250658

COUNSEL PRESS
(800) 274-3321 • (800) 359-6859

Library of Congress
Law Library

QUESTION PRESENTED

The Court has agreed to hear two cases this term on the appropriate standard to be applied when determining whether a case is "exceptional" under 35 U.S.C. § 285.

The question presented in *Highmark Inc. v. Allcare Management Systems* (12-1163) is:

> Whether a district court's exceptional-case finding under 35 U.S.C. § 285 (which permits the court to award attorney's fees in exceptional cases), based on its judgment that a suit is objectively baseless, is entitled to deference.

The question presented in *Octane Fitness v. Icon Health and Fitness* (12-1184) is:

> Whether the Federal Circuit's promulgation of a rigid and exclusive two-part test for determining whether a case is "exceptional" under 35 U.S.C. § 285 improperly appropriates a district court's discretionary authority to award attorney fees to prevailing accused infringers in contravention of statutory intent and this Court's precedent, thereby raising the standard for accused infringers (but not patentees) to recoup fees and encouraging patent plaintiffs to bring spurious patent cases to cause competitive harm or coerce unwarranted settlements from defendants.

Although these cases were not consolidated by the Court, NYIPLA is submitting this Amicus Brief in both

cases because it respectfully submits that the answer to each question is dependent, at least in part, on the answer to the other question, with respect to whether unjustified litigation gives rise to an exceptional case.*

---

* The questions posed do not address the jurisprudence supporting other grounds for determining a patent case exceptional, such as willful or intentional infringement, inequitable conduct before the Patent and Trademark Office or other vexatious or malfeasant behavior in the course of litigation. *See, e.g., Multiform Desiccants, Inc. v. Medzam, Ltd.*, 133 F.3d 1473, 1481-82 (Fed. Cir. 1998).

TABLE OF CONTENTS

Page

QUESTION PRESENTED i

TABLE OF CONTENTS..... iii

TABLE OF CITED AUTHORITIES vi

INTEREST OF *AMICUS CURIAE* 1

SUMMARY OF ARGUMENT..... 3

ARGUMENT..... 6

I. GUIDING PRINCIPLES IN FORMULATING AN "EXCEPTIONAL" CASE ANALYSIS 6

A. The standard for declaring a case exceptional should be on parity for both patent holders and accused infringers 7

B. The standard used for Section 285 should not make patent litigation more costly or burdensome 8

C. The award of attorney fees should be limited to "exceptional" cases..... 10

D. The award of attorney fees under Section 285 should not be dictated by the standards for fee awards under other statutes 11

Table of Contents

Page

II. SLIGHTLY LOWER TWO-PART TEST WITH ULTIMATE DISCRETION LEFT TO THE TRIAL COURT.....12

A. The analysis for an "exceptional" case should remain a two-part test.....13

B. The objective prong should be slightly easier to meet, but still subject to *de novo* review.....14

1. Arguments asserted with a low likelihood of success may contribute to an "exceptional" case.....14

2. The objective test should be reviewed *de novo*.....15

C. The subjective prong should focus on the purpose of the arguments made and be subject to review for clear error.....19

1. The subjective test should assess the purpose of the objectively meritless assertions.....19

2. The subjective test should be reviewed for clear error 20

Table of Contents

Page

D. The final decision of whether to award attorney fees in an exceptional case should be left to the discretion of the district court 21

CONCLUSION 23

TABLE OF CITED AUTHORITIES

Page

Cases

Brooke Furniture Mfg. v. Dutailier Int'l, Inc.,
393 F.3d 1378 (Fed. Cir. 2005) 13

Chambers v. NASCO, Inc.,
501 U.S. 32 (1991) 12

Cooter & Gell v. Hartmarx Corp.,
496 U.S. 384 (1990) ..... *passim*

Dominant Semiconductors Sdn. Bhd. v. OSRAM GmbH,
524 F.3d 1254 (Fed. Cir. 2008) 15

Dubil v. Rayford Camp & Co.,
184 F.2d 899 (9th Cir. 1950) 10

eBay Inc. v. MercExchange, L.L.C.,
547 U.S. 388 (2006) 21-22

Fleischmann Distilling Corp. v. Maier Brewing Co.,
386 U.S. 714 (1967) 18

Graham v. John Deere Co. of Kan. City,
383 U.S. 1 (1966) 7

Highmark, Inc. v. Allcare Health Mgmt. Sys.,
687 F.3d 1300 (Fed. Cir. 2012) 15, 19

Cited Authorities

Page

Holmes Grp., Inc. v. Vornado Air Circulation Systems, Inc.,
535 U.S. 826 18

Jacquard Knitting Mach. Co. v. Ordnance Gauge Co.,
213 F.2d 503 (3d Cir. 1954) 11

Markman v. Westview Instruments, Inc.,
517 U.S. 370 (1996) 18

Mathis v. Spears,
857 F.2d 749 (Fed. Cir.1988) 19

Mayo Collaborative Servs. v. Prometheus Labs., Inc.,
132 S. Ct. 1289 (2012) 11

Park-In-Theatres, Inc. v. Perkins,
190 F.2d 137 (9th Cir. Cal. 1951) 10, 11

Pierce v. Underwood,
487 U.S. 552 (1988) 16, 17

Prof'l Real Estate Investors v. Columbia Pictures Indus.,
508 U.S. 49 (1993) 13, 16

Quantum Corp. v. Tandon Corp.,
940 F.2d 642 (Fed. Cir. 1991) 9

Cited Authorities

Page

In re Seagate Tech., LLC,
497 F.3d 1360 (Fed. Cir. 2007) 9, 19

Sun-Tek Ind., Inc. v. Kennedy Sky Lites, Inc.,
929 F.2d 676 (Fed. Cir. 1991).....21

Statutes and Legislative History

28 U.S.C. § 1927.....4, 11

35 U.S.C. § 285..... *passim*

R.S. § 4921 10

S. Rep. No. 79-1503 (1946) 7-8

Rules

Fed. R. Civ. P. 11 ..... *passim*

Fed. R. Civ. P. 52 20

Other Authorities

Abraham Lincoln, *Lecture on "Discoveries, Inventions and Improvements,"* Feb. 22, 1860 7

AIPLA Report of the Economic Survey 2013 8

Intellectual Property and the U.S. Economy: Industries in Focus, Econ. & Statistics Admin. and USPTO (Mar. 2012) 6

INTEREST OF *AMICUS CURIAE*

The New York Intellectual Property Law Association ("NYIPLA" or "Association") respectfully submits this *amicus curiae* brief in support of neither party.[1]

The arguments set forth herein were approved on December 5, 2013 by an absolute majority of the officers and members of the Board of Directors of the NYIPLA, including any officers or directors who did not vote for any reason, including recusal, but do not necessarily reflect the views of a majority of the members of the Association, or of the law or corporate firms with which those members are associated. After reasonable investigation, the NYIPLA believes that no officer or director or member of the Committee on *Amicus* Briefs who voted in favor of filing this brief, nor any attorney associated with any such officer, director or committee member in any law or corporate firm, represents a party in this litigation. Some officers, directors, committee members or associated attorneys may represent entities, including other *amici curiae*, which have an interest in other matters which may be affected by the outcome of this litigation.

---

1. Counsel for Respondent Allcare Health Management Systems, Inc. and Petitioner Highmark, Inc. consented to the filing of an amicus curiae brief in a communication on November 11, 2013. Blanket consent to the filing of *amicus curiae* briefs, in support of either party or of neither party, was received from counsel for Petitioner Octane Fitness and counsel for Respondent Icon Health & Fitness, Inc. in a docket entry dated October 31, 2013. Pursuant to Sup. Ct. R. 37.6, no counsel for a party authored this brief in whole or in part, and no counsel or party made a monetary contribution intended to fund the preparation or submission of this brief. No person other than NYIPLA, its members, or its counsel made a monetary contribution to its preparation or submission.

The NYIPLA is a professional association of approximately 1,300 attorneys whose interests and practices lie in the area of patent, trademark, copyright, trade secret and other intellectual property law. The Association's members include a diverse array of attorneys specializing in patent law, from in-house counsel for businesses that own, enforce and challenge patents, to attorneys in private practice who represent inventors in various proceedings before the United States Patent and Trademark Office ("PTO").

A substantial percentage of the Association's member attorneys participate actively in patent litigation, representing both patent owners and accused infringers. The Association's members also frequently engage in patent licensing matters on their clients' behalf, representing both patent licensors and licensees. The entities served by the Association's members include inventors, entrepreneurs, venture capitalists, businesses, universities, and industry and trade associations.

NYIPLA's interest in this case stems from the influence this case may have on the potential for recovering attorney fees in exceptional cases and the influence that it might have on the litigation activities of patent right holders and owners including but not limited to patent assertion entities (PAEs). In particular, this case may be used as a vehicle for addressing the recent concerns arising in the patent law community and among policymakers and the popular media over litigation initiated by PAEs. However, NYIPLA has an equal concern that this case should not discourage patent rights holders and owners from legitimate assertions of their patent rights, whether the patent rights holders or owners are PAEs or practicing entities.

The activities of NYIPLA members and practitioners depend on the evenly-applied and predictably-construed rights granted under the Patent Act. Thus, NYIPLA sets forth guiding principles and proposed rules to encourage and balance these competing interests.

SUMMARY OF ARGUMENT

I. The NYIPLA appreciates the need for clarification regarding the discretion granted to trial courts in awarding attorney fees to prevailing parties in "exceptional" patent cases. Patents have long been a significant element of the U.S. economy, and there has been a great deal of press recently regarding the practices of enforcing them through litigation. The clear intent behind Section 285 is to provide a fee shifting remedy to prevailing parties when it would be unjust for them to bear the entire burden of their own attorney fees. Section 285 is intended to be impartial and available to any prevailing party as an appropriate remedy in such unwarranted cases. Section 285 should be equally available and applied evenly to both accused infringers and patentees who are an unjustly burdened prevailing party.

The NYIPLA respectfully submits that in order to address the situations in which an exceptional case under Section 285 should be found, and what level of deference to give the district court in making such a finding, the Court should consider the following guiding principles:

A. Patent holders and accused infringers should be treated evenly under Section 285.

B. The award of attorney fees under Section 285 should not lead to or require extensive and burdensome proceedings beyond the resolution of the dispute on the merits.

C. As the statute is currently written, attorney fees are only available in "exceptional" cases and thus should not be awarded in every case.

D. Section 285 provides a fee shifting remedy under the Patent Act that is distinct from sanctions awarded under Rule 11 and costs awarded under 28 U.S.C. § 1927, and thus does not need to apply the same standard.

II. With these guiding principles in mind, NYIPLA respectfully submits that the form of the present test for determining whether a case is "exceptional" under Section 285—a two-part test with an objective and subjective evaluation of the case, followed by a discretionary award by the district court—is an appropriate structure for the analysis, but that the current tests create too high of a bar to meet in order to adequately protect unjustly burdened prevailing parties from misconduct.

The NYIPLA respectfully advocates maintaining the current structure of a two-part test to provide a level playing field for prevailing patent owners and accused infringers—with an objective and subjective prong, after which an award *may* be awarded at the district court's discretion—but lowering the threshold required to meet each prong slightly. Once it is determined that both prongs are met, the ultimate decision—whether to award attorney fees and what the appropriate amount should

be—is, as is presently the case, left to the district court based on the court's observations throughout the course of the trial.

Specifically, the NYIPLA proposes that, in a Section 285 assessment of whether a case is exceptional, the district court consider:

1) Were the asserted claims or defenses *objectively* meritless (absent, *e.g.*, advocacy for a change in the law) such that any reasonable litigant would expect a low likelihood of success on the merits?

and

2) Was the litigant *subjectively* advancing such claims or defenses in the litigation for an improper purpose (*e.g.*, extorting money, prolonging the litigation, or increasing litigation costs)?

Assuming *both* parts of this test are met, the case would then be considered an "exceptional" case and the district court may exercise its discretion to award (or not award) some or all of the prevailing party's reasonable attorney fees.

Under this structure, the NYIPLA proposes that the objective prong be subject to *de novo* review, the subjective test be reviewed for clear error, and the ultimate award of the district court be reviewed for an abuse of discretion. Attorney fees awarded under the proposed test should continue to be available only to prevailing parties (whether alleged infringers or patentees).

ARGUMENT

I. GUIDING PRINCIPLES IN FORMULATING AN "EXCEPTIONAL" CASE ANALYSIS

Patents play a vital role in the economy, in part, by fulfilling their constitutionally-granted purpose of providing an incentive for innovation.[2] Enforcement of this granted "exclusive right" to patented subject matter is an important aspect of the incentive that patents provide. Thus, rules that encourage the enforcement of rightfully granted patents and the elimination of improper ones are useful in achieving the benefits of a functioning patent system. Over the past few years, there has been an increase in press coverage on patent enforcement practices that suggest a need to reconsider the application of Section 285 to address abusive litigation practices.

In evaluating the proper application of Section 285, while balancing the competing goals of compensating unjustly wronged parties and staying within the intent and language of the statute, the NYIPLA sets forth the following guiding principles:

---

2. *See Intellectual Property and the U.S. Economy: Industries in Focus*, Econ. & Statistics Admin. and USPTO (Mar. 2012), www.uspto.gov/news/publications/IP_Report_March_2012.pdf. ("The granting and protection of intellectual property rights is vital to promoting innovation and creativity and is an essential element of our free-enterprise, market-based system.").

A. The standard for declaring a case exceptional should be on parity for both patent holders and accused infringers

The patent statute is intended to be a carefully crafted system that both encourages invention and disclosure, but does not unreasonably foreclose access to such inventions. "The patent system . . . [adds] the fuel of interest to the fire of genius"[3] but that blaze might be smothered if the enforcement of granted patent rights is skewed by the judiciary. Just as a line must be drawn "between the things which are worth to the public the embarrassment of an exclusive patent, and those which are not,"[4] a balance between patent enforcement and defense against accused infringement must be made in the judicial system. In order to induce inventors "to bring forth new knowledge,"[5] patentees must be assured that they can enforce their patent rights without fear of exorbitant fees in the event of mere failure. Moreover, the economy, competition, and the advance of science may be stifled if businesses fear unwarranted and costly patent litigation.

In order to maintain the balance of the patent system, the standard for awarding attorney fees in an exceptional case should be equally available to prevailing patent holders and accused infringers. *See, e.g.*, S. Rep. No. 79-

---

3. Abraham Lincoln, *Lecture on "Discoveries, Inventions and Improvements,"* delivered before the Library Association of Springfield, Illinois, Feb. 22, 1860, *reprinted in* Charles R. Macedo, *The Corporate Insider's Guide to U.S. Patent Practice* 4 (2010).

4. *Graham v. John Deere Co. of Kan. City*, 383 U.S. 1, 9 (1966) (quoting Thomas Jefferson, Letter to Isaac McPherson (Aug. 1813))

5. *Id.*

1503 (1946), *reprinted in* 1946 U.S. Code Cong. Serv. 1386, 1387 (explaining that the predecessor statute of Section 285 "will discourage infringement of a patent by anyone thinking that all he would be required to pay if he loses the suit would be a royalty" but that "[t]he provision is also *made general* so as to enable the court to prevent a gross injustice to an alleged infringer." (emphasis added)). In other words, there should be parity; the same level of burdens and tests should be applied even-handedly, with no bias either way.

B. The standard used for Section 285 should not make patent litigation more costly or burdensome

One of the biggest problems associated with patent litigation is that it costs so much to resolve disputes in court.[6] Over the years, patent litigations have resulted in various satellite litigations on issues such as willful infringement and inequitable conduct, which are independent grounds for finding a patent case exceptional under Section 285. These proceedings have led to increased costs by increasing discovery demands, and requiring additional factual and legal findings outside of the resolution of the primary disputes on the merits of the infringement claim. Such diversions from the real issue are harmful to the patent system as a whole by raising the costs and burdens of patent litigation even higher.

One way to limit costs associated with litigating ancillary disputes, such as whether unwarranted patent

6. According to one study, even patent infringement suits with less than one million dollars at risk have a median litigation cost of $700,000. Report of the Economic Survey 2013, AIPLA 34 (Jul. 2013).

litigation rises to an exceptional case, is to make those issues subject to more predictably applied tests, rather than requiring exhaustive investigation into subjective details. For example, after *In re Seagate*, in which the Federal Circuit required a showing of *objective* recklessness for a finding of willful infringement, the widespread sideshow litigation on willful infringement was curtailed to only the more egregious cases. *In re Seagate Tech., LLC*, 497 F.3d 1360, 1369-71 (Fed. Cir. 2007) (explaining that "[s]ince *Underwater Devices*, we have recognized the practical concerns stemming from our willfulness doctrine," such as the "onerous" bifurcation of trials to avoid prejudice from the waiver of the attorney client privilege (citing to *Quantum Corp. v. Tandon Corp.*, 940 F.2d 642, 643-44 (Fed. Cir. 1991)). While a departure from the current two-part test for evaluating an "exceptional" case may be well intentioned, adopting a rule that spawns more satellite litigation in patent disputes is likely to be more harmful than helpful, by encouraging more baseless and costly litigation.

Thus, the test guiding the analysis of whether a case qualifies as "exceptional" should remain a two-part test, including both an objective and subjective prong, to allow for a predictable application of fees while limiting any additional discovery that might be involved in evaluating the subjective injustice alleged in the case. Because both parts of the test must be met for a case to be "exceptional," the objective test can be used as a threshold test before reaching any subjective issue that might require additional limited discovery.

C. The award of attorney fees should be limited to "exceptional" cases

The role of attorney fees in patent cases to act as a deterrent to baseless or dilatory arguments by the patent holders and infringers alike is important and should be encouraged, but attorney fees should not become run-of-the-mill and ordered against the loser in every case.

As is clear from the statutory language of Section 285, and the legislative history, the award of attorney fees was intended to be limited to cases fitting the definition of "exceptional." Section 285 replaced its predecessor statute on attorney fees, R.S. § 4921, to codify the prevailing practice in the courts and the original statutory intent. *See, e.g.*, Testimony of P.J. Federico Before the House Subcommittee at 108-109 (June 14, 1951)(explaining that the term "exceptional cases" "was picked up from the reports in passing [R.S. § 4921] and the decisions of the courts that have followed that"); *Park-In-Theatres, Inc. v. Perkins*, 190 F.2d 137, 142 (9th Cir. 1951) ("The Reports of House and Senate Committees . . . provided . . . that 'It is not contemplated that the recovery of attorney's fees will become an ordinary thing in patent suits.'" (quoting 1946 U.S. Code Cong. Serv. 1386, 1387)).

In awarding attorney fees under R.S. § 4921, the district courts had been required to state the basis for the award clearly. *See, e.g., Dubil v. Rayford Camp & Co.*, 184 F.2d 899, 903 (9th Cir. 1950). Acceptable grounds for the award included "unfairness or bad faith in the conduct of the losing party . . . which [made] it grossly unjust that the winner of the particular law suit be left to bear the burden of his own counsel fees which prevailing litigants

normally bear." *Park-In-Theatres*, 190 F.2d at 142; *accord Jacquard Knitting Mach. Co. v. Ordnance Gauge Co.*, 213 F.2d 503, 508-509 (3d Cir. 1954).

Thus, with the addition of the "exceptional" case limitation to Section 285, Congress, in response to the interpretation of its predecessor statute on attorney fees, intended the statute to be used to compensate prevailing parties for that level of injustice amounting to an "exceptional" case. Only after a case is determined "exceptional" is the discretion left to the district court as to whether to award attorney fees and in what amount.

D. The award of attorney fees under Section 285 should not be dictated by the standards for fee awards under other statutes

Although Section 285 may overlap with other legal authorities which provide for the grant of attorney fees or monetary penalties for improper conduct in litigation provisions—such as Rule 11 and 28 U.S.C. § 1927—it is a distinct remedy and need not apply the same standard as those provisions. *Cf. Mayo Collaborative Servs. v. Prometheus Labs., Inc.*, 132 S. Ct. 1289, 1303-04 (2012) (explaining that although two statutes might overlap, applying complementary sections instead of another statute "assum[es] that those sections can do work that they are not equipped to do"). Section 285 allows for the award of attorney fees in "exceptional" patent cases, which is not an equivalent to the sanctions specified in Rule 11 for an attorney's failure to conduct a "reasonable inquiry" and verify that specifically identified (and challenged) court filings "are well-grounded in fact, legally tenable, and 'not interposed for any improper purpose.'" *Cooter & Gell v.*

Hartmarx Corp., 496 U.S. 384, 393 (1990) ("*Cooter*"). Nor is Section 285 identical to the penalty under Section 1927 directed to an attorney who "multiplies the proceedings in any case unreasonably and vexatiously." *See Chambers v. NASCO, Inc.*, 501 U.S. 32, 48 (1991) (explaining that "the amendment to § 1927 allowing an assessment of fees against an attorney says nothing about a court's power to assess fees against a party"). While these provisions may cover similar conduct, or the same conduct may run afoul of the different provisions, each was implemented for a different purpose and may not be conflated.

II. SLIGHTLY LOWER TWO-PART TEST WITH ULTIMATE DISCRETION LEFT TO THE TRIAL COURT

A two-part test with objective and subjective prongs is an appropriate approach to guide the district courts in evaluating whether a case is "exceptional." However, the current two-part test is too high of a standard to cover many exceptional cases. Thus, the objective and subjective prongs of the current test should be relaxed while still providing sufficient guidance such that attorney fees will not be available as a rule in every case. The ultimate discretion allowed to the judge to apply such a remedy provides flexibility to ensure that attorney fees in a given case are granted based on unjust litigation claims or defenses that were observably "exceptional" over the course of the litigation.

A. The analysis for an "exceptional" case should remain a two-part test

The two-part test applied below for analyzing whether a case is "exceptional" was adopted by the Federal Circuit in *Brooks Furniture Mfg. v. Dutailier Int'l, Inc.*, 393 F.3d 1378, 1381 (Fed. Cir. 2005) and extracted from this Court's two-part definition of a "sham" litigation in *Prof'l Real Estate Investors v. Columbia Pictures Indus.*, 508 U.S. 49, 60 (1993) ("*PRE*"). In *PRE*, this Court outlined a two-part definition of "sham" litigation in the context of an antitrust violation as (1) an objectively baseless lawsuit "in the sense that no reasonable litigant could realistically expect success on the merits" brought in (2) subjectively bad faith such that it attempts to "interfere *directly* with the business relationships of a competitor." *Id.* (emphasis in original).

In *Brooks Furniture*, the Federal Circuit applied that antitrust standard from *PRE* to help define "exceptional" cases in patent law, such that a case is only considered "exceptional" for a prevailing accused infringer "if both (1) the litigation is brought in subjective bad faith, and (2) the litigation is objectively baseless." 393 F.3d at 1381. However, as this two-part test was originally developed to determine whether to grant immunity from an antitrust claim, it is too rigorous a standard to effectively include the numerous situations under which an "exceptional" patent case might arise.

Thus, the proposed test adopts the rationale of *PRE* to have a two-part test including both subjective and objective prongs, but lowers the threshold of each prong to account for the different standards in an antitrust

action—which impose treble damages in civil cases and can have criminal consequences—and a civil tort action under the patent laws. These lower bars are intended to more appropriately address the differences in the effects and the pertinent evidentiary support for an award of fees for an "exceptional" case under Section 285 as compared to a "sham litigation" that may deprive a party of antitrust immunity. For example, the assertion of exclusionary rights under copyright in just one lawsuit against one party, without more, may provide objectively little proof of anticompetitive behavior. Thus, a high standard for "sham litigation" before removing antitrust immunity corresponds with a possible severe penalty once that immunity is removed. In contrast, meritless arguments made for an improper purpose in one patent lawsuit is a fitting guideline for awarding fees under Section 285 in that particular lawsuit.

B. The objective prong should be slightly easier to meet, but still subject to *de novo* review

1. Arguments asserted with a low likelihood of success may contribute to an "exceptional" case

NYIPLA's proposed test slightly lowers the bars for finding a case "exceptional." For the objective prong, the proposed test changes the required "baselessness" of the merits from:

> "[O]bjectively baseless . . . such that ***no*** reasonable litigant could reasonably ***expect success*** on the merits."

Highmark, Inc. v. Allcare Health Mgmt. Sys., 687 F.3d 1300, 1309 (Fed. Cir. 2012) (quoting *Dominant Semiconductors Sdn. Bhd. v. OSRAM GmbH*, 524 F.3d 1254, 1260 (Fed. Cir. 2008)) (emphasis added).

to:

> Objectively meritless (absent, *e.g.*, advocacy for a change in the law) such that any reasonable litigant would expect a ***low likelihood*** of success on the merits.

Notably, a case that has a low level of merit such that it satisfies the objective prong is not automatically "exceptional." Because both the objective and subjective prongs must be met under this two-part test, a run-of-the-mill case that would allow a patent holder or accused infringer to fairly test the strength of their respective claims or defenses will continue to be ineligible to be named an "exceptional" case. Further, by advocating this test, the NYIPLA does not mean to suggest that any case with less than a 50% chance of success on the merits automatically meets the objective prong. Rather, the likelihood of success on the merits must be sufficiently low objectively, to any reasonable litigant who is not, for example, advocating for a change in the law or not reasonably advocating that the existing law should not apply to the particular facts of the case.

2. The objective test should be reviewed *de novo*

Although NYIPLA proposes using a lower standard for each of the prongs of the two-part objective/subjective

test, because the structure of the proposed test is unchanged from *PRE*, the standards of review for each of the prongs should be maintained. Therefore, the objective prong of the proposed two-part test should be subject to *de novo* review.

As discussed in *PRE*, the objective question of baselessness, or meritlessness in this case, is one of law. *PRE*, 508 U.S. at 63 (using "probable cause" as a proxy for the objective prong, and explaining that where "there is no dispute over the predicate facts of the underlying legal proceeding, a court may decide probable cause as a matter of law"). Two other cases that have been cited in the proceeding to argue that the objective prong should be reviewed under an "abuse of discretion"—*Pierce v. Underwood*, 487 U.S. 552 (1988)("*Pierce*") (analyzing whether the government's litigation position was "substantially justified" under the Equal Access to Justice Act ("EAJA")) and *Cooter* (analyzing sanctions imposed under Rule 11)—are distinguishable from *PRE* and the present cases. Both cases involved the award of fees under different legal authorities and relied heavily on the underlying factual determinations regarding the subjective *judgment* exercised in advancing litigation positions rather than the objective *merit* of those positions themselves.

In *Pierce*, this Court explained that the "substantially justified" analysis relied on facts that might not be conveyed by the record, such as the diligence of the government in forming its argument, leaving the trial court "better positioned" to decide the issue. *Pierce*, 487 U.S at 559-60. Furthermore, this Court explained that allowing *de novo* review of the government's

interpretation of the law *at the time* it formed its litigation position might distort the appellate process for EAJA cases because a reversal on the fee decision could read on the underlying merits of the case and effectively uphold the lower merits decision without a formal appeal on the merits. *Id.* at 560-61. Neither of these concerns applies to the objective prong of an "exceptional" case analysis under Section 285. First, determining the objective merit of an asserted claim or defense does not depend on the litigant's diligence or other facts not in the record. Second, because in an "exceptional" case determination the appellate court is reviewing whether a rejected argument had a sufficiently *"low likelihood"* of success—instead of reviewing whether the government's losing position was nonetheless "substantially justified" as in an EAJA award—there is no risk of undermining any unappealed merits decision.

In *Cooter*, this Court explained that it is especially difficult to distinguish between legal and factual issues in a Rule 11 context because the appeal court cannot examine "purely legal questions, such as whether the attorney's legal argument was correct" but instead must consider "whether a pleading is 'warranted by existing law or a good faith argument' for changing the law ***and*** whether the attorney's conduct violated Rule 11." *Cooter*, 496 U.S. at 399, 401 (emphasis added). Thus, a court reviewing a Rule 11 determination must "consider issues rooted in factual determinations," such as any extenuating circumstances of the case and the competence of the signing attorney. *Id.* at 401-02. Again, the proposed objective prong of an "exceptional" case analysis does not involve such close factual questions, as it is concerned with the objective merits of the asserted claim or defense and not the reasonableness of the litigant's judgment in asserting it.

Additionally, the policy goals of Section 285 lean toward *de novo* review of the objective prong rather than an "abuse-of-discretion." Unlike in *Cooter*, in which the policy goals of Rule 11 were furthered by an "abuse of discretion" standard because "[t]he district court is best acquainted with the local bar's litigation practices," the Federal Circuit, and not the district court, is best positioned to evaluate the merits of a claim or defense asserted in patent litigation. *Cooter*, 496 U.S. at 404. Permitting the Federal Circuit to review the objective prong of the test for an "exceptional" case would encourage a more predictable application of Section 285 for prevailing parties and the uniformity of result for patent cases desired by Congress in creating the Federal Circuit. *See Markman v. Westview Instruments*, 517 U.S. 370, 390 (1996); *Holmes Grp., Inc. v. Vornado Air Circulation Sys.*, 535 U.S. 826, 840 (2002) (Ginsburg, J., concurring) (explaining that, in creating the Federal Circuit, "Congress sought to eliminate forum shopping and to advance uniformity in the interpretation and application of federal patent law"). Although Section 285 is an exception to the "American Rule," it is a limited exception. Leaving room for review by the one specialized patent court fulfills the policy goals of restricting the grant of attorney fees to "exceptional" cases while maintaining consistency such that parties are not "unjustly discouraged" from participation in the action. *Fleischmann Distilling Corp. v. Maier Brewing Co.*, 386 U.S. 714, 718, 720 n.16 (1967) ("In support of the American rule, it has been argued that since litigation is at best uncertain one should not be penalized for merely defending or prosecuting a lawsuit, and that the poor might be unjustly discouraged from instituting actions to vindicate their rights if the penalty for losing included the fees of their opponents' counsel.")

Moreover, *de novo* review allows the appellate court to benefit from the trial judge's reasoned determination of the objective test in the context of the given case, but does so from the perspective of placing that case in the landscape of what is objectively ordinary or exceptional patent litigation.

C. The subjective prong should focus on the purpose of the arguments made and be subject to review for clear error

1. The subjective test should assess the purpose of the objectively meritless assertions

NYIPLA's proposed test also lowers the bar for the subjective prong of the "exceptional" case analysis. The current subjective test is:

> Was the litigation brought in ***subjective bad faith*** due to the "lack of objective foundation [being] 'either ***known or so obvious that it should have been known***' by the party asserting the claim"?

Highmark, Inc., 687 F.3d at 1308-09 (quoting *In re Seagate Tech., LLC*, 497 F.3d 1360, 1371 (Fed. Cir. 2007)) (emphasis added).

The NYIPLA respectfully recommends that this test be changed to:

> Was the litigant subjectively advancing such claims or defenses in the litigation for an

> ***improper purpose*** (*e.g.*, extorting money, prolonging the litigation, or increasing litigation costs)?

This change refocuses the analysis from the bad faith of the non-prevailing party to the broader purpose of its behavior in the course of litigation. By focusing on the entire course of the litigation, any presumptions concerning why the litigation was initiated are moot and the parties are on an even playing field. The more comprehensive characterization of bad faith corresponds to the lower standard of the objective prong and allows for a wider range of "bad behavior" to qualify as bad faith, whether proven by direct evidence or inference from the parties' conduct of record in the case.

2. The subjective test should be reviewed for clear error

The subjective prong of the test, as a question of fact determined based on the intent of the non-prevailing party, should be reviewed for clear error. Fed. R. Civ. P. 52(a)(6).

Although the subjective test is inherently a question of fact, it should not be subject to a high evidentiary standard, in order to limit burdensome ancillary discovery and satellite litigation. Because direct evidence of subjective intent may be difficult or impossible to find, district courts should be permitted to infer subjective intent from indirect and circumstantial evidence to lower the cost and burden for this prong. Still, the subjective improper purpose should be the single most reasonable inference able to be drawn from that evidence.

Even though the subjective prong of the proposed two-part test might be related to the assessment of the objective prong, this subjective test is still a necessary and distinct part of an "exceptional" case analysis. For one, it might be an unacceptable outcome for an equitable remedy such as Section 285 to be applied against an actor who acted in good faith, but was merely unaware that its asserted arguments were meritless. Furthermore, unlike, for example, the EAJA, where the United States can be presumed to be advocating in good faith for the public interest, is no such presumption for a private actor. Instead, Section 285 was enacted to "codify in patent cases the 'bad faith' equitable exception to the American Rule. . . . Recognizing the good faith / bad faith distinction, Congress expressly limited such awards to 'exceptional cases'." *Sun-Tek Indus., Inc. v. Kennedy Sky Lites, Inc.*, 929 F.2d 676, 678 (Fed. Cir. 1991) (quoting *Mathis v. Spears*, 857 F.2d 749, 758 (Fed. Cir.1988). Accordingly, the subjective intent of the non-prevailing party must be included in the analysis of an "exceptional" case, but should be evaluated in a way that does not become so burdensome and costly as to override the underlying policy goals of the statute.

D. The final decision of whether to award attorney fees in an exceptional case should be left to the discretion of the district court

As this Court has made clear, because the statutory language of Section 285 provides that a district court "may" award attorney fees in exceptional cases, the decision to award fees after finding a case "exceptional" should be "an act of equitable discretion by the district court, reviewable on appeal for abuse of discretion." *eBay*

Inc. v. MercExchange, L.L.C., 547 U.S. 388, 391 (2006). In *eBay*, this Court held injunctions under patent law were subject to the same well-established principles of equity in awarding permanent injunctions in other areas of law. *Id.* The applicable test for injunctions consists of a four-factor test; only after all of the elements of the test are met may the court decide, within its discretion, whether to grant or deny injunctive relief. *Id.* This structure for the award of an injunction set out in *eBay* is analogous to the proposed two-part objective/subjective test under which each prong must be met before the court *may* award fees at its discretion.

Because the district court is left with the ultimate discretion of whether to award attorney fees based on the court's observations throughout the course of the litigation, the district court is given the appropriate amount of discretion under the two-part test.

CONCLUSION

The NYIPLA supports a predictably applied two-part objective/ subjective test for the analysis of whether a case is "exceptional" for the purposes of awarding attorney fees under Section 285. After the case is deemed "exceptional," a district court should be left with the discretion to award such fees. For the reasons stated above, the NYIPLA respectfully urges the Court to adopt its proposed test for the determination of an "exceptional" case.

Respectfully submitted,

ANTHONY F. LO CICERO
President-Elect, NEW YORK INTELLECTUAL PROPERTY LAW ASSOCIATION
CHARLES R. MACEDO*
Co-Chair of Amicus Briefs Committee, NEW YORK INTELLECTUAL PROPERTY LAW ASSOCIATION
AMSTER, ROTHSTEIN & EBENSTEIN LLP
90 Park Avenue
New York, NY 10016
(212) 336-8000
cmacedo@arelaw.com

ROBERT M. ISACKSON
Co-Chair of Amicus Briefs Committee, NEW YORK INTELLECTUAL PROPERTY LAW ASSOCIATION
ORRICK, HERRINGTON & SUTCLIFFE LLP
51 West 52nd Street
New York, NY 10019
(212) 506-5000

Counsel for Amicus Curiae
New York Intellectual Property Law Association

**Counsel of Record*

December 9, 2013

AMICUS CURIAE BRIEF

RECORD
AND
BRIEFS

Supreme Court, U.S.
FILED
DEC - 9 2013
OFFICE OF THE CLERK

Nos. 12-1184

In The
Supreme Court of the United States

OCTANE FITNESS, LLC,
Petitioner,

v.

ICON HEALTH & FITNESS, INC.,
Respondent.

On Writ of Certiorari
to the United States Court of Appeals
for the Federal Circuit

BRIEF OF 3M CO., GENERAL ELECTRIC CO., THE PROCTER & GAMBLE COMPANY, AND JOHNSON & JOHNSON AS *AMICI CURIAE* IN SUPPORT OF PETITIONER

Bradford A. Berenson
Richard Rainey
Stephen Shackelford, Jr.
GENERAL ELECTRIC COMPANY
3135 Easton Turnpike
Fairfield, CT 06828
(203) 373-2211

Kevin H. Rhodes
3M INNOVATIVE PROPERTIES COMPANY
P.O. Box 33428
St. Paul, Minnesota 55133
(651) 736-4533

Pratik A. Shah
Counsel of Record
Ruthanne M. Deutsch
Matthew A. Scarola
AKIN GUMP STRAUSS HAUER & FELD LLP
1333 New Hampshire Ave., NW
Washington, DC 20036
(202) 887-4000
pshah@akingump.com

(Counsel continued on inside cover)

WILSON-EPES PRINTING CO., INC. – (202) 789-0096 – WASHINGTON, D. C. 20002

Library of Congress
Law Library

Philip S. Johnson
JOHNSON & JOHNSON
One Johnson & Johnson Plaza
New Brunswick, NJ 08933
(732) 524-2368

Steven W. Miller
THE PROCTER & GAMBLE COMPANY
One Procter & Gamble Plaza
Cincinnati, OH 45202
(513) 983-7327

David M. Stein
AKIN GUMP STRAUSS HAUER & FELD LLP
633 West Fifth Street
Suite 5000
Los Angeles, CA 90071
(213) 254-1200

QUESTION PRESENTED

Whether 35 U.S.C. § 285, which authorizes the award of attorney fees to prevailing parties in "exceptional cases," applies equally to prevailing plaintiffs and prevailing defendants, such that accused infringers can also recover fees when appropriate.

TABLE OF CONTENTS

QUESTION PRESENTED i

INTEREST OF *AMICI CURIAE* 1

INTRODUCTION AND SUMMARY OF ARGUMENT 2

ARGUMENT 4

I. EQUITABLE DISCRETION SHOULD GUIDE FEE AWARDS UNDER SECTION 285 4

II. "NON-PRACTICING ENTITIES" INCLUDE MANY LEGITIMATE, INNOVATIVE PATENT HOLDERS THAT DO NOT ENGAGE IN ABUSIVE LITIGATION TACTICS 6

A. American Innovation Has Long Relied On The Right To License Or Sell Patent Rights 7

B. Many Licensing Fees Are Legitimate and Pro-Innovation, Not Extortionary 10

C. Data Do Not Indicate That Abuses Within The Patent System Are Wholly, Or Even Mostly, Attributable To Any Single Class Of Patent Holders 12

III. EVENHANDED APPLICATION OF 35 U.S.C. § 285 WILL FOSTER A STRONG AND BALANCED PATENT SYSTEM 15

CONCLUSION 17

TABLE OF AUTHORITIES

CASES:

Bonito Boats, Inc. v. Thunder Craft Boats, Inc.,
489 U.S. 141 (1989) 7

Brooks Furniture Mfg., Inc. v. Dutailier Int'l, Inc.,
393 F.3d 1378 (Fed. Cir. 2005) 5

Cooter & Gell v. Hartmarx Corp.,
496 U.S. 384 (1990) 6

Fogerty v. Fantasy, Inc.,
510 U.S. 517 (1994) 4, 6

Grant v. Raymond,
31 U.S. (6 Pet.) 218 (1832) 7

Kewanee Oil Co. v. Bicron Corp.,
416 U.S. 470 (1974) 7

Pfaff v. Wells Elecs., Inc.,
525 U.S. 55 (1998) 7

CONSTITUTION AND STATUTES:

U.S. CONST. Article I, § 8, cl. 8 10

35 U.S.C.
§ 100(d) 8
§ 281 8
§ 285 ..... *passim*

Pub. L. No. 112-29, 125 Stat. 284 (2011) 13

OTHER AUTHORITIES:

American Innovation & Jobs, and Potential Solutions: Hearing Before the H. Subcomm. on Courts, Intellectual Property and the Internet, 113th Cong. (2013) (statement of Philip S. Johnson, Chief Intellectual Property Counsel, Johnson & Johnson, on behalf of the Coalition for 21st Century Patent Reform) 10, 11

Cotropia, Christopher Anthony et al., *Patent Assertion Entities (PAEs) Under the Microscope: An Empirical Investigation of Patent Holders as Litigants* (Illinois Public Law and Legal Theory, Research Paper No. 14-17, 2013) 12, 13, 14

Demand Letters and Consumer Protection: Examining Deceptive Practices by Patent Assertion Entities, Hearing Before the S. Subcomm. on Consumer Protection, Product Safety, and Insurance, 113th Cong. (2013) (statement of Adam Mossoff, Professor of Law, George Mason University School of Law) 8, 9

Lamoreaux, Naomi R. et al., *Patent Alchemy: The Market for Technology in US History*, 87 BUS. HIST. REV. (2013) 8

Letter from American Intellectual Property Law Association to Federal Trade Commission and Department of Justice (April 5, 2013), *Comments on the FTC/DOJ Patent Assertion Entity Activities Workshop*.....6

Mossof, Adam, *The Rise and Fall of the First American Patent Thicket: The Sewing Machine War of the 1850s*, 53 ARIZ. L. REV. 165 (2011) 10

Patent Trolls: Fact or Fiction? Hearing Before the S. Subcomm. On Courts, the Internet, and Intellectual Property, 109th Cong. (2006) (statement of Dean Kamen, President, DEKA Research & Development Corporation) 9

Reader's Digest, *The Charles Goodyear Story*, THE READER'S DIGEST ASSOCIATION, INC. (1958) 9

Risch, Michael, *Patent Troll Myths*, 42 SETON HALL L. REV. 457 (2012).....7

THE INNOVATION ALLIANCE, U.S. GOVERNMENT ACCOUNTABILITY OFFICE STUDY OF LITIGATION BY NON-PRACTICING ENTITIES UNDER SECTION 34 OF THE AMERICA INVENTS ACT: COMMENTS OF THE INNOVATION ALLIANCE (2012). 11, 13

U.S. GOV'T ACCOUNTABILITY OFFICE, GAO-13-465, INTELLECTUAL PROPERTY: ASSESSING FACTORS THAT AFFECT PATENT INFRINGEMENT COULD HELP IMPROVE PATENT QUALITY (Aug. 2013) 13, 14

In The

Supreme Court of the United States

No. 12-1184

OCTANE FITNESS, LLC,
Petitioner,

v.

ICON HEALTH & FITNESS, INC.,
Respondent.

ON WRIT OF CERTIORARI
TO THE UNITED STATES COURT OF APPEALS
FOR THE FEDERAL CIRCUIT

BRIEF OF 3M CO., GENERAL ELECTRIC CO., THE PROCTER & GAMBLE COMPANY, AND JOHNSON & JOHNSON AS *AMICI CURIAE* IN SUPPORT OF PETITIONER

INTEREST OF *AMICI CURIAE*[1]

As established leaders in American innovation and as large patent holders, *Amici* 3M Co., General Electric Co, Johnson & Johnson, and The Procter & Gamble Company ("Companies") have a substantial interest in the proper resolution of the question presented in this case.

[1] This brief is filed with the written consent of all parties through universal letters of consent on file with the Clerk. No counsel for either party authored this brief in whole or in part, nor did any party or other person make a monetary contribution to the brief's preparation or submission.

Amici Companies are among the oldest, most experienced, and most successful innovators in the United States. Together, they spend billions of dollars each year to develop, produce, and market thousands of new products—and employ over a half million people in doing so. To protect these activities, *Amici* Companies file for thousands of U.S. patents every year, and hold thousands more issued to them by the United States Patent & Trademark Office. Because of the nature of their businesses, *Amici* Companies participate extensively in patent litigation as plaintiffs and defendants, as practicing and non-practicing entities, and as patent holders and accused infringers.

It is critical to *Amici* Companies that the litigation playing field is a level one, governed by fair and impartial rules that protect patent rights while deterring abusive litigation practices by any party. *Amici* thus seek an even-handed application of 35 U.S.C. § 285 that will curb abusive patent-litigation conduct—independent of party or practicing-entity status—and support petitioner's proposed "equitable discretion" test.

INTRODUCTION AND SUMMARY OF ARGUMENT

While abusive patent litigation is a serious problem that should be sanctioned to deter similar conduct, it would be a mistake to hold any particular class of patent litigants at fault. Nonetheless, some critics have singled out entities that license patents they do not commercially practice—sometimes called "patent assertion entities" (PAEs), "non-practicing

entities" (NPEs), or most derogatively, "patent trolls"—as the culprits. But *Amici* believe that those truly interested in curbing abusive patent litigation should focus not on broadly labeled classes of litigants, but on litigation misconduct itself.

That is particularly important because non-practicing patentees—such as universities, start-ups, small businesses, and individual inventors—routinely play critically productive roles in fostering innovation and creating economic growth in this country through the invention, pre-commercial development, and licensing of their intellectual property rights to others who are better positioned to commercialize their technical breakthroughs.

To be sure, there are instances (some extremely well-publicized) of patent litigation abuse involving non-practicing patent owners who use the courts in an effort to collect large numbers of nuisance settlements. Yet this problem, in the experience of *Amici* Companies, is no more serious than that created by many infringing defendants who routinely fight off meritorious patent suits by pressing scores of frivolous defenses and counterclaims, and who otherwise rely upon dilatory tactics to force unjust settlements. Accordingly, the focus should be on curbing litigation misconduct wherever it occurs. An evenhanded standard, flexibly applied, allows just that.

Amici Companies thus urge the Court to adopt an evenhanded approach for determining fee awards under 35 U.S.C. § 285 that, in accord with the statutory text, would penalize abusive litigation

conduct independent of party status or label. *Cf. Fogerty v. Fantasy, Inc.*, 510 U.S. 517, 533-534 (1994). Because both plaintiffs and defendants can engage in vexatious litigation—a practice as old as the U.S. patent system itself—the availability of attorney fees should not be weighted towards any particular class of litigant.

ARGUMENT

Amici Companies agree with petitioner that 35 U.S.C. § 285 should be interpreted even-handedly in its application to plaintiffs and defendants. The Companies likewise support petitioner in urging for adoption of a flexible standard that permits "district courts in patent cases to consider traditional equitable factors, guided by the purposes of patent law, in granting fee awards" under Section 285. Pet. Br. 13.

I. EQUITABLE DISCRETION SHOULD GUIDE FEE AWARDS UNDER SECTION 285

Amici Companies believe that the Federal Circuit's test for what constitutes an "exceptional" case under Section 285 has set the bar too high. Fee shifting is invoked too rarely to serve as an effective deterrent against litigation misconduct. The Federal Circuit has interpreted Section 285 as permitting fee shifting only in cases where the culpable conduct of the non-prevailing party fits into one of the specific categories the court has defined as meeting the threshold for an exceptional case: objectively baseless litigation brought in subjective bad faith; willful infringement; inequitable conduct before the

patent office; or Rule 11 abuses and similar material litigation misconduct. *See, e.g., Brooks Furniture Mfg., Inc. v. Dutailier Int'l, Inc.*, 393 F.3d 1378, 1381 (Fed. Cir. 2005). As a result, application of Section 285 has become mechanical and ineffective as a means for district courts to manage and deter litigation misconduct.

The Federal Circuit's Section 285 jurisprudence misses the forest for the trees. By cabining the grounds for finding a case "exceptional" to narrow categories of egregious conduct, the court has lost sight of Section 285's purpose as an exception to the American Rule when, under the totality of the circumstances, equity requires that the prevailing party not bear some or all of the fees it incurred. To be clear, Section 285 plainly makes the awarding of fees the exception, not the rule. But "exceptional" is not synonymous with "almost never." Fee shifting under Section 285 should be available to district courts in practice, not merely on paper, when sound equitable discretion dictates that a non-prevailing party has acted in a manner beyond the bounds of acceptable litigation behavior and should therefore bear the consequences of its actions by paying some or all of its opponent's reasonable litigation expenses.

Amici Companies thus urge the Court to realign the interpretation of Section 285 with traditional principles of equity, as applied in the context of the claims, defenses, and issues arising in patent litigation, and with acceptable norms of litigation conduct. The district courts should be empowered to determine which cases are "exceptional," and whether and in what amount fees should be shifted

upon such a finding, through exercise of their sound equitable discretion based on the totality of the record. By doing so, fee shifting in patent cases will serve the same purposes this Court has indicated it serves in other areas of litigation: a case management tool for courts to discourage certain types of claims or defenses and to sanction misconduct. *See, e.g., Fogerty*, 510 U.S. at 522-525; *Cooter & Gell v. Hartmarx Corp.*, 496 U.S. 384, 393 (1990).

II. "NON-PRACTICING ENTITIES" INCLUDE MANY LEGITIMATE, INNOVATIVE PATENT HOLDERS THAT DO NOT ENGAGE IN ABUSIVE LITIGATION TACTICS

Overreliance on labels such as "trolls," "non-practicing entities," or "patent assertion entities" distracts from the real problem: abusive litigation conduct, whatever its source. Such "broad brush terms" are loosely defined at best, and can "sweep in independent inventors, universities, and technology licensing organizations," without regard to the useful role that such entities play in the patent system.[2]

---

[2] Letter from American Intellectual Property Law Association to Federal Trade Commission and Department of Justice (April 5, 2013), *Comments on the FTC/DOJ Patent Assertion Entity Activities Workshop*, at 1, *available at* http://perma.cc/PF36-U39W?type=pdf.

A. American Innovation Has Long Relied On The Right To License Or Sell Patent Rights.

1. The quid pro quo of the patent system "represents a carefully crafted bargain that encourages both the creation and the public disclosure of new and useful advances in technology, in return for an exclusive monopoly for a limited period of time." *Pfaff v. Wells Elecs., Inc.*, 525 U.S. 55, 63 (1998); *see Bonito Boats, Inc. v. Thunder Craft Boats, Inc.*, 489 U.S. 141, 150-151 (1989) (Patent law embodies "a carefully crafted bargain for encouraging the creation and disclosure of new, useful, and nonobvious advances in technology and design."). This Court has long recognized that the disclosures provided through patents "will stimulate ideas and the eventual development of further significant advances in the art," and that these "additions to the general store of knowledge are of such importance" that they are worth the "high price of *** exclusive use." *Kewanee Oil Co. v. Bicron Corp.*, 416 U.S. 470, 481 (1974); *see also Grant v. Raymond*, 31 U.S. (6 Pet.) 218, 247 (1832).

Our patent system has never required an inventor or patent holder to practice the patent in order to obtain—or retain—the benefits of the freely alienable right to exclude. Disclosure of the invention, not its practice, forms the quid pro quo for patents, and patentees need not practice their inventions to enforce their patents. Michael Risch, *Patent Troll Myths*, 42 SETON HALL L. REV. 457, 499 & n.154 (2012). The Patent Act thus allows patent rights to be protected and enforced in court not only

by the patentee, 35 U.S.C. § 281, but also by successors in title to the patentee, *id.* § 100(d).

2. A thriving secondary market in patent rights has long allowed the American economy to realize the full commercial potential from innovation in all technology sectors. *See, e.g.*, Naomi R. Lamoreaux et al., *Patent Alchemy: The Market for Technology in US History*, 87 BUS. HIST. REV. 3-4 (2013) ("ability to find buyers quickly for patents was an important driver of inventive activity during the late nineteenth and early twentieth centuries"). That makes sense. "Talented inventors can be more productive if they are able to specialize in generating new technological ideas and then transfer the work of commercializing those ideas to others." *Id.* at 4.

Some of our Nation's best and most productive inventors have neither manufactured nor marketed their own inventions. Over sixty percent of the "great inventors" of the Industrial Revolution sold or licensed some or all of their patents. *Patent Alchemy* at 5-6. Thomas Edison, for example, primarily sold and licensed his patents, especially in the early invention-intensive portion of his career, to secure funds for his ongoing research and development. *Id.* at 6. Similarly, "Charles Goodyear, the inventor of vulcanized rubber ***[,] made all of his money by selling the rights to manufacture, license, sell, and use his patented innovation[]"; he "*never* manufactured or sold rubber products."[3]

---

[3] Demand Letters and Consumer Protection: Examining Deceptive Practices by Patent Assertion Entities, Hearing

Independent inventors continue to play a crucial role in the American innovation economy today. When Dean Kamen, a prolific American innovator (*e.g.*, the Segway, the Slingshot water purification system, medical pumps and robotic prosthetic limbs) and recipient of the National Medal of Technology in 2000, realized that he might qualify as a patent "troll," he told Congress why he thought it "maybe a little unfair and dangerous to characterize people that license products as trolls." Kamen explained that dedication to innovation allowed him to take his products "to these giant companies who do what they do well. They have marketing, they have sales, they have distribution, they have infrastructure, and I deliver the solutions to them." As a result, "the public *** win[s], because I c[an] get way more products out to way more people more quickly; and it *** cost[s] the public less because they are taking advantage of this larger infrastructure of my big corporate client."[4]

Before the S. Subcomm. on Consumer Protection, Product Safety, and Insurance, 113th Cong. 4 (2013) (statement of Adam Mossoff, Professor of Law, George Mason University School of Law) (emphasis added); *see also* Reader's Digest, *The Charles Goodyear Story*. THE READER'S DIGEST ASSOCIATION, INC. (1958), *available at* http://www.goodyear.com/corporate/history/history_story.html.

[4] Patent Trolls: Fact or Fiction? Hearing Before the S. Subcomm. On Courts, the Internet, and Intellectual Property, 109th Cong. 30-33 (2006) (statement of Dean Kamen, President, DEKA Research & Development Corporation), *available at* http://commdocs.house.gov/committees/judiciary/hju28201.000/hju28201_0f.htm [http://perma.cc/VCQ8-GD4H].

Kamen's story, like those of Goodyear, Edison, and countless others, shows the patent system working at its best: free alienability of patent property rights allows for division of labor and exercise of comparative advantage in innovation, thereby "promot[ing] the Progress of Science and useful Arts." U.S. CONST. Article I, § 8, cl. 8.

B. Many Licensing Fees Are Legitimate and Pro-Innovation, Not Extortionary.

The U.S. patent system has driven innovation and economic growth since the founding of the Nation. Patent-licensing entities as a group, whether dubbed NPEs, PAEs, or trolls, have often been indispensable in allowing that system to fulfill its potential. *See, e.g.*, Adam Mossoff, *The Rise and Fall of the First American Patent Thicket: The Sewing Machine War of the 1850s*, 53 ARIZ. L. REV. 165, 186-194 (2011) (describing the surge of litigation about the multiple patents involved in the sewing machine and the eventual emergence of a patent "pool" and cross-licensing).

Critics of NPEs as an undifferentiated class seldom consider the pro-competitive value of purchasing access to patented technology, conflating justified payment to non-practicing patentees with payment to settle frivolous lawsuits. American Innovation & Jobs, and Potential Solutions: Hearing Before the H. Subcomm. on Courts, Intellectual Property and the Internet, 113th Cong. 6 (2013) (statement of Philip S. Johnson, Chief Intellectual Property Counsel, Johnson & Johnson, on behalf of

the Coalition for 21st Century Patent Reform). But legitimate payments are made every day to obtain valuable patent rights, including through cross-licensing arrangements. Indeed, many payments to NPEs are "being made to gain commercial access to valuable technologies, not just to buy off frivolous suits." *Id.*[5] Johnson & Johnson, for example, pays hundreds of millions of dollars every year to NPEs—including R&D partners, universities, independent investors, and small businesses—for licenses that the company hopes to incorporate into its products. Only a small percentage of that sum is paid to settle claims believed to be specious.

Moreover, *Amici* Companies, like many similarly situated companies, own patents that they do not currently practice. As explained above, it is often more efficient to license those technologies to others to implement; sometimes it does not make commercial sense for a patent owner to try to commercialize the patent rights. But those intellectual property rights are still valuable, and infringement of those patents, even when not being practiced by the patent holders, still triggers the protections of the patent law. Applying the Patent Act's attorney-fee provision in a manner that winks at potential infringement of patents held but not

---

[5] *See also* The Innovation Alliance, U.S. Government Accountability Office Study of Litigation by Non-Practicing Entities under Section 34 of the America Invents Act: Comments of the Innovation Alliance 18–19 (2012) (hereinafter "Innovation Alliance"), *available at* http://perma.cc/7STH-3LAA?type=pdf.

practiced would substantially undermine the fundamental quid pro quo of the U.S. patent system.

C. Data Do Not Indicate That Abuses Within The Patent System Are Wholly, Or Even Mostly, Attributable To Any Single Class Of Patent Holders.

Amici Companies do not dispute that abusive litigation threatens the vitality of the patent system. Yet there is no consensus that a single class of patent owners is to blame, let alone a consensus driven by data subject to public scrutiny.

Thus, some of the most sweeping contentions, *e.g.*, "that NPEs cost the economy tens of billions of dollars, [are] based upon a *confidential survey* of *defendants*." Christopher Anthony Cotropia et al., *Patent Assertion Entities (PAEs) Under the Microscope: An Empirical Investigation of Patent Holders as Litigants* 4 (Illinois Public Law and Legal Theory, Research Paper No. 14-17, 2013) (emphasis added). Of course, there is no way to assess the reliability of studies based on undisclosed data. Yet, unfortunately, much of our public discourse about "trolls" is plagued by studies that disclose only summary data, fail to distinguish between the myriad types of non-practicing entities, and do not permit peer review. *See id.* at 5 ("While the rhetoric in these studies is often sharp and clear, the same cannot also be said for the disclosures of the underlying data. The studies merely provide summary data to the public, and often do not differentiate among the various types of NPEs.").

Exacerbating the problem is the lack of consensus in the empirical literature on definitional terminology, *see, e.g.*, *id.* at 4 & n.5; Innovation Alliance at 5-10—resulting in the use of epithets that obscure, rather than elucidate, a shared understanding of the issues grounded in analytical examination of litigation practices.

Data from a recent congressionally mandated study further suggest that an oversimplified focus on one particular class of litigant does not capture the complexity of abusive patent litigation. Congress charged the GAO to "study *** the consequences of litigation by non-practicing entities, or by patent assertion entities, related to patent claims." Pub. L. No. 112-29 § 34(a), 125 Stat. 284, 340 (2011). Among other things, Congress required information about "[t]he volume of cases comprising such litigation that are found to be without merit after judicial review[,]" *id.* § 34(b)(2), and "[t]he *** impact of such litigation on the economy of the United States," *id.* § 34(b)(5).

After analyzing the data, which even it did not release publicly, the GAO discovered that "focus on the identity of *** litigant[s] *** may be misplaced." *See* U.S. GOV'T ACCOUNTABILITY OFFICE, GAO-13-465, INTELLECTUAL PROPERTY: ASSESSING FACTORS THAT AFFECT PATENT INFRINGEMENT COULD HELP IMPROVE PATENT QUALITY 45 (Aug. 2013). GAO found that, "[f]rom 2000 to 2010, the number of patent infringement lawsuits fluctuated slightly, and from 2010 to 2011, the number increased about 31 percent." *Id.* at 14. But when GAO compared data from 2007 to 2011, it found *no* statistically significant increase in the percentage of suits brought by NPEs

that "buy patents from others for the purpose of asserting them for profit" (which the report referred to as "patent monetization entities" or "PME[s]"). *Id.* at 2; *see also id.* at 17. The report also concluded that "[o]perating companies brought most of the patent infringement lawsuits from 2007 to 2011[]"—an estimated 68 percent, compared with less than 20 percent filed by PMEs. *Id.* at 17.

The GAO's study is, of course, hardly the definitive and conclusive last word on the subject. There is more work to be done, and more understanding to be gained, by careful analyses that carefully define their terms and disclose their data. *E.g.* Cotropia, et al. at 1 (finding increase in lawsuits filed by non-practicing entities "driven almost entirely [by] a procedural rule change relating to joinder passed with the 2011 patent reform").

One conclusion can be drawn from the state of today's evidence: neither legislative nor judicial decision-makers should reach results based on "data" that may be little more than anecdotes about outlier cases. That is particularly so when such ungrounded empiricism results in an unblinking focus on one particular type of litigant and distracts from the paramount goal of shaping the proper legal standards to tackle abusive litigation tactics employed by *all* types of entities that deal in patents.

III. EVENHANDED APPLICATION OF 35 U.S.C. § 285 WILL FOSTER A STRONG AND BALANCED PATENT SYSTEM

Amici Companies agree with petitioner that this Court should afford district courts the needed flexibility to award attorney fees under 35 U.S.C. § 285 to help deter abusive litigation tactics as Congress intended. This Court should adopt petitioner's "equitable discretion test for defining 'exceptional,'" Pet. Br. 14, and apply it not only evenhandedly to prevailing plaintiffs and defendants alike, but also without regard to status as a practicing or non-practicing entity. Neither party nor patent-practicing status should be factored into the determination of whether a case is "exceptional." Instead, "exceptional" status warranting fees should focus on the specific litigation positions and conduct pressed by the losing party in litigation.

The proof is in the pudding, as this case concededly "does not involve a classic 'troll.'" Pet. Br. 4. Rather, it "involve[s] a larger competitor asserting a non-practiced patent against a smaller competitor" in what petitioner dubs "a troll-like manner." *Id.* But "troll-like manner" is simply shorthand for abusive litigation conduct, which is just as threatening to the patent system and to judicial resources whether committed by plaintiffs or defendants and practicing as well as non-practicing patentees. "Asserting unreasonably weak patent claims and using the cost of litigation as a weapon of coercion is what all abusive patent cases have in common." *Id.* In other words, this case shows why any type of entity—practicing or not, large or small,

plaintiff or defendant—should be subject to an attorney fee award if it engages in abusive litigation.

* * * * *

At bottom, Section 285's text and purposes, consonant with the multifaceted interests protected by the patent law, require a level playing field among potential patent litigants. To be sure, certain non-practicing patent holders engage in abusive litigation practices. But so too can certain practicing entities, whether plaintiffs or defendants. The rules of the game should punish bad patent-litigation conduct committed whenever by whomever. Nothing in Section 285's undifferentiated text or the purposes underlying the Patent Act supports the selective imposition of categorical litigation disadvantages grounded in ill-fitting and misunderstood labels.

CONCLUSION

For the foregoing reasons, the judgment of the court of appeals should be reversed.

Respectfully submitted.

Bradford A. Berenson
Richard Rainey
Stephen Shackelford, Jr.
General Electric Company

Kevin H. Rhodes
3M Innovative Properties Company

Philip S. Johnson
Johnson & Johnson

Steven W. Miller
The Procter & Gamble Company

Pratik A. Shah
Counsel of Record
David M. Stein
Ruthanne M. Deutsch
Matthew A. Scarola
Akin Gump Strauss Hauer & Feld LLP

December 9, 2013

AMICUS CURIAE BRIEF

RECORD
AND
BRIEFS

No. 12-1184

Supreme Court, U.S.
FILED
DEC - 9 2013
OFFICE OF THE CLERK

In The
Supreme Court of the United States

OCTANE FITNESS, LLC,

Petitioner,

v.

ICON HEALTH & FITNESS, INC.,

Respondent.

On Writ Of Certiorari To The United States Court Of Appeals For The Federal Circuit

BRIEF OF *AMICI CURIAE* VERMONT, NEBRASKA, ALABAMA, ALASKA, ARIZONA, ARKANSAS, FLORIDA, GEORGIA, HAWAII, IOWA, INDIANA, KANSAS, LOUISIANA, MAINE, MASSACHUSETTS, MARYLAND, MICHIGAN, MINNESOTA, MISSISSIPPI, MISSOURI, MONTANA, NEW MEXICO, NORTH DAKOTA, OHIO, OREGON, PENNSYLVANIA, SOUTH DAKOTA, UTAH, WASHINGTON AND WYOMING IN SUPPORT OF PETITIONER

WILLIAM H. SORRELL
Vermont Attorney General
BRIDGET ASAY
Counsel of Record
NAOMI SHEFFIELD
Assistant Attorneys General
109 State St.
Montpelier, VT 05609
(802) 828-5500
basay@atg.state.vt.us

JON BRUNING
Nebraska Attorney General
KATHERINE J. SPOHN
Deputy Attorney General
2115 State Capitol Building
Lincoln, NE 68509
(402) 471-2862
katie.spohn@nebraska.gov

[Additional Counsel Listed At End Of Brief]

COCKLE LEGAL BRIEFS (800) 225-6964
WWW.COCKLELEGALBRIEFS.COM

Library of Congress
Law Library

QUESTION PRESENTED

Whether a district court, in exercising its discretion to award attorney fees to prevailing accused patent infringers in "exceptional cases" under Title 35, United States Code, Section 285, should use traditional equitable factors guided by the purposes of patent law to protect legitimate patent interests in reasonable ways rather than the Federal Circuit's rigid test requiring both objective baselessness and subjective bad faith.

TABLE OF CONTENTS

Page

QUESTION PRESENTED i

TABLE OF CONTENTS ii

TABLE OF AUTHORITIES iii

INTEREST OF *AMICI CURIAE* 1

INTRODUCTION AND SUMMARY OF ARGUMENT 3

ARGUMENT 5

I. Current legal standards make it too hard to combat meritless patent infringement claims 5

A. Abusive patent enforcement practices are pervasive and harmful 6

B. The onerous fee-shifting standard for prevailing alleged infringers exacerbates abusive patent practices 18

II. The Court should overrule the Federal Circuit's inflexible two-prong test and adopt a reasonable, evenhanded fee-shifting standard that promotes the goals of the patent system 24

CONCLUSION 29

TABLE OF AUTHORITIES

Page

CASES

Ashcroft v. Iqbal, 556 U.S. 662 (2009) 13

Avocent Huntsville Corp. v. Aten Int'l Co., 552 F.3d 1324 (Fed. Cir. 2008).....12

Bell Atl. Corp. v. Twombly, 550 U.S. 544 (2007) 13

Biosig Instruments, Inc. v. Nautilus, Inc., 715 F.3d 891 (Fed. Cir. 2013).....16

Brooks Furniture Mfg., Inc. v. Dutailier Int'l, Inc., 393 F.3d 1378 (Fed. Cir. 2005).....18

Checkpoint Sys., Inc. v. All-Tag Sec. S.A., 711 F.3d 1341 (Fed. Cir. 2013).....21

Christiansburg Garment Co. v. EEOC, 434 U.S. 412 (1978).....20

Dominant Semiconductors Sdn. Bhd. v. OSRAM GmbH, 524 F.3d 1254 (Fed. Cir. 2008).....18, 26

Eng'g & Inspection Servs., LLC v. IntPar, LLC, 2013 WL 5589737 (E.D. La. Oct. 10, 2013).....13

Eon-Net LP v. Flagstar Bancorp, 653 F.3d 1314 (Fed. Cir. 2011).....23

Exxon Research & Eng'g Co. v. United States, 265 F.3d 1371 (Fed. Cir. 2001).....16

Fogerty v. Fantasy, Inc., 510 U.S. 517 (1994).....11, 20

General Elec. Co. v. Wabash Appliance Corp., 304 U.S. 364 (1938).....16

TABLE OF AUTHORITIES – Continued

Page

General Motors Corp. v. Devex Corp., 461 U.S. 648 (1983) 25

Highmark, Inc. v. Allcare Health Mgmt. Sys., Inc., 706 F. Supp. 2d 713 (N.D. Tex. 2010), *vacated in part*, 732 F. Supp. 2d 653, *rev'd in part*, 687 F.3d 1300 (Fed. Cir. 2012), *cert. granted*, 2013 WL 1217353, 81 USLW 3562, 82 USLW 3177 (U.S. Oct. 01, 2013) 19, 21, 22

iLOR, LLC v. Google, Inc., 631 F.3d 1372 (Fed. Cir. 2011) 19

K-Tech Telecomm., Inc. v. Time Warner Cable, Inc., 714 F.3d 1277 (Fed. Cir. 2013) 14

Lear, Inc. v. Adkins, 395 U.S. 653 (1969) 11

Mathis v. Spears, 857 F.2d 749 (Fed. Cir. 1988) 18

McZeal v. Sprint Nextel Corp., 501 F.3d 1354 (Fed. Cir. 2007) 14

Morton Int'l, Inc. v. Cardinal Chem. Co., 5 F.3d 1464 (Fed. Cir. 1993) 16

Pope Mfg. Co. v. Gormully, 144 U.S. 224 (1892) 25

Precision Links Inc. v. USA Prods. Group, Inc., 527 F. App'x 852 (Fed. Cir. 2013) 21

Raylon, LLC v. Complus Data Innovations, Inc., 700 F.3d 1361 (Fed. Cir. 2012) 19

R+L Carriers, Inc. v. DriverTech LLC (In re Bill of Lading Transmission & Processing Sys. Patent Litig.), 681 F.3d 1323 (Fed. Cir. 2012) 14

TABLE OF AUTHORITIES – Continued

Page

Red Wing Shoe Co. v. Hockerson-Halberstadt, Inc., 148 F.3d 1355 (Fed. Cir. 1998) 12

Redd Group, LLC v. Glass Guru Franchise Sys., Inc., 2013 WL 3462078 (N.D. Cal. July 8, 2013) 15

Ruckelshaus v. Sierra Club, 463 U.S. 680 (1983) 20

In re Seagate Tech., LLC, 497 F.3d 1360 (Fed. Cir. 2007) 19

SHFL Entm't, Inc. v. DigiDeal Corp., 2013 WL 5328437 (D. Nev. Sept. 20, 2013) 14

Silent Drive, Inc. v. Strong Industries, Inc., 326 F.3d 1194 (Fed. Cir. 2003) 12

Sinclair & Carroll Co. v. Interchemical Corp., 325 U.S. 327 (1945) 10

Taurus IP, LLC v. DaimlerChrysler Corp., 726 F.3d 1306 (Fed. Cir. 2013) 21

CONSTITUTIONAL PROVISIONS

U.S. Const. art. I, § 8, cl. 8 24

STATUTES

35 U.S.C. § 112(b) 15

35 U.S.C. § 285 ..... *passim*

TABLE OF AUTHORITIES – Continued

Page

RULES

Fed. R. Civ. P. 11 19

LEGISLATIVE HISTORY

S. Rep. No. 1503 (1946) 18

OTHER AUTHORITIES

John R. Allison *et al.*, *Patent Quality and Settlement Among Repeat Patent Litigants*, 99 Geo. L.J. 677 (2011) 17, 22

Chris Barry *et al.*, PricewaterhouseCoopers, *2012 Patent Litigation Study* (2012) 17

James Bessen & Michael Meurer, *The Direct Costs from NPE Disputes*, 99 Cornell L. Rev. (forthcoming 2014) 8, 9

Emily H. Chen, *Making Abusers Pay: Deterring Patent Litigation by Shifting Attorneys' Fees*, 28 Berkeley Tech. L.J. 351 (2013) 23, 26

Colleen V. Chien, *Turn the Tables on Patent Trolls*, Forbes.com (Aug. 9, 2011), *available at* http://www.forbes.com/sites/ciocentral/2011/08/09/turn-the-tables-on-patent-trolls/ 23

Chester Chuang, *Offensive Venue: The Curious Use of Declaratory Judgment to Forum Shop in Patent Litigation*, 80 Geo. Wash. L. Rev. 1065 (2012) 12

TABLE OF AUTHORITIES – Continued

Page

Dan D'Ambrosio, *Patent Trolls Take on Vermont Businesses*, Burlington Free Press, Nov. 7, 2013 9

Democratic Staff of H. Comm. on Energy and Commerce, 113th Cong., *Memorandum regarding Hearing on "The Impact of Patent Assertion Entities on Innovation and the Economy"* (Nov. 13, 2013) 7

Tom Ewing & Robin Feldman, *The Giants Among Us*, 2012 Stan. Tech. L. Rev. 1 6

Federal Trade Commission, *The Evolving IP Marketplace: Aligning Patent Notice and Remedies with Competition* (2011) 25

Robin Feldman, *Patent Demands and Startup Companies: The View from the Venture Capital Co.*, *available at* http://ssrn.com/abstract_id=2346338 (last visited Dec. 4, 2014) 22

Richard Blakely Glasgow, *Pleading Edge*, Intellectual Property Magazine 40 (Dec. 2012/Jan. 2013) 15

John M. Golden, *"Patent Trolls" and Patent Remedies*, 85 Tex. L. Rev. 2111 (2007) 11

Ilene Knable Gotts & Scott Sher, *The Particular Antitrust Concerns with Patent Acquisitions*, 8 Competition Law Int'l 19 (Aug. 2012) 10

TABLE OF AUTHORITIES – Continued

Page

Drew Hendricks, *Three Measures Small Businesses Should Take to Avoid Patent Trolls*, Forbes.com (Sept. 30, 2013), *available at* http://www.forbes.com/sites/drewhendricks/2013/09/30/3-measures-small-businesses-should-take-to-avoid-patent-trolls/ 9

Paul M. Janicke & L. Ren, *Who Wins Patent Infringement Cases?*, 34 AIPLA Q.J. 1 (Winter 2006) 21, 24

Judicial Business of the United States Courts, *2012 Annual Report of the Director* 17

Megan M. La Belle, *Patent Litigation, Personal Jurisdiction, and Public Good*, 18 Geo. Mason L. Rev. 1 (2010) 11, 28

Timothy B. Lee, *Here's What it Feels Like to be Sued by a Patent Troll*, Washington Post, July 18, 2013 9

Mark A. Lemley, *Where to File Your Patent Case*, 38 AIPLA Q.J. 4 (Fall 2010) 13

Letter from Amazon.com, Inc., AOL Inc., *et al.* to Senator Patrick J. Leahy, *et al.* (July 30, 2013), *available at* http://internetassociation.org/wp-content/uploads/2013/07/Letter-_-73013.pdf 6, 8, 9

Aron Levko *et al.*, PricewaterhouseCoopers, *A Closer Look: 2008 Patent Litigation Study: Damages Awards, Success Rates and Time-to-Trial* (2008) 11

TABLE OF AUTHORITIES – Continued

Page

Brian J. Love & James C. Yoon, *Expanding Patent Law's Customer Suit Exception*, 93 B.U. L. Rev. 1605 (2013) 8

Randall R. Rader *et al.*, *Make Patent Trolls Pay in Court*, N.Y. Times, June 4, 2013 .....7, 10, 26

RPX Corporation, *2012 NPE Activity Report* (2013).....17

David Schwartz, *The Rise of Contingent Fee Representation in Patent Litigation*, 64 Ala. L. Rev. 335 (2012).....7, 8, 23

U.S. Gov't Accountability Office, GAO-13-465, *Assessing Factors That Affect Patent Infringement Litigation Could Help Improve Patent Quality* (2013).....23, 28

Brian T. Yeh, Cong. Research Serv., R42668, *An Overview of the "Patent Trolls" Debate* (2013).....7, 10

INTEREST OF *AMICI CURIAE*

State attorneys general play a central role in protecting consumers and ensuring fair and honest commercial practices. In recent years, patent enforcement practices have become a real and substantial consumer protection problem. Indeed, state attorneys general across the country have received complaints about unfair and deceptive efforts to license and enforce patents.

The fact that businesses targeted by abusive patent enforcement practices have turned to state attorneys general for help is not surprising. In non-legal terms, claims of patent infringement sometimes look like extortionate scams. Patent holders claim that use of common, everyday technology infringes their patents: for example, scanning a document and sending it by email, creating a JPEG image, or using Wi-Fi. Patent holders at times direct their questionable demand letters to unsophisticated small businesses and nonprofits. Demand letters may threaten expensive litigation and seek substantial and unjustified licensing fees. Often the targeted entity – perhaps a coffee shop, a health care provider or a local choir group – knows nothing about patent law. In other cases, the target may be a start-up or small business, and a patent infringement claim – however questionable or baseless – may threaten needed financing or lead to cancelled projects. These targeted entities face an impossible choice: pay an expensive and unwarranted licensing fee or risk financially disastrous litigation. Many pay a licensing fee not because

the claim has merit but because any other option – getting legal advice or risking litigation – is too expensive.

State attorneys general can fight some of these tactics using consumer protection enforcement tools, but these efforts are limited and can only do so much. Businesses need the tools to protect themselves. If they choose to fight back, and possibly litigate, they need to know that the rules will apply evenhandedly and that the overzealous patent holder faces litigation risk too. This case provides an opportunity for the Court to strengthen one crucial tool: the ability of an accused infringer to recover attorneys' fees in a meritless infringement action. The Federal Circuit's standard is unjustifiably stringent and disfavors a party that successfully defends against alleged infringement.

Correcting the Federal Circuit's rigid and unfair standard will not end abusive patent enforcement practices. But it will help. Patent holders should not be able to extort unjustified licensing fees merely because of the high cost of defending patent suits. Allowing a party that defeats an infringement claim a reasonable opportunity to recover fees will make private parties more likely to challenge meritless patent claims. That, in turn, will help reduce these widespread and unfair practices.

INTRODUCTION AND SUMMARY OF ARGUMENT

The high cost of patent litigation unduly burdens businesses. Businesses accused of infringement pay licensing fees and settle cases because the cost is often far less than litigation. Alleged infringers pay even though they believe a patent is invalid or they know they are not infringing. They pay even though the patentee's claim construction is flawed and over-broad. If a patent is invalid or a claim of infringement is unreasonable, the patent system should encourage an accused infringer to challenge the allegations. But the high costs of litigation coupled with the low likelihood of recovering attorneys' fees means there is no benefit to fighting a bad patent or an over-broad assertion. It is less expensive to take a license or reach a settlement.

These distorted incentives have caused a significant increase in meritless patent enforcement actions – both litigation and aggressive and threatening licensing campaigns. Patent holders have little motivation to avoid making weak or meritless claims. Patentees typically only bear their own expenses, and sometimes not even those. And the legal rules in place do not adequately deter baseless claims. Indeed, patent holders can readily profit from making aggressive and indiscriminate claims of patent infringement; so much so, an industry has developed based on this business model.

Correcting the Federal Circuit's mistaken interpretation of 35 U.S.C. § 285, the fee-shifting provision, is essential to deterring baseless patent litigation. The Federal Circuit's standard favors patent holders and makes it too hard for a successful alleged infringer to recover attorneys' fees. That inflexible and unduly demanding standard encourages the indiscriminate assertion of patent claims.

The Court should dispense with both parts (objective baselessness and subjective bad faith) of the Federal Circuit's rigid two-prong test. Instead, the Court should adopt a fair and reasonable definition of an "exceptional" case under § 285, one that affords a district court discretion to award attorneys' fees based on a range of relevant factors. The relevant inquiry should not be whether the patentee's claims were frivolous, but whether the claims were objectively unreasonable and, given the totality of the circumstances, an award of attorneys' fees is appropriate. Allowing an accused infringer a reasonable opportunity to recover fees will make targets more likely to dispute baseless claims and patent owners less likely to assert them.

ARGUMENT

I. Current legal standards make it too hard to combat meritless patent infringement claims.

At one level, this case presents a straightforward question of statutory interpretation. Congress directed that in patent cases, a district court "in exceptional cases may award reasonable attorney fees to the prevailing party." 35 U.S.C. § 285. The Federal Circuit's rigid test, which requires clear and convincing proof that a patentee's claims were *both* objectively baseless and brought in subjective bad faith, is not faithful to the statute's text. *See* Pet. Br. 17-29. That alone calls for reversal.

But that understanding of this case, while correct, is incomplete. The exceptional-case standard is part of a larger set of legal rules that govern patent cases. Those rules, unfortunately, are allowing abusive patent enforcement practices to flourish. The costs are felt by businesses, consumers, courts – by everyone, that is, except those who profit from patent trolling.

The Court cannot, of course, even begin to address all of these issues in this one case. But the Court should approach this case with this broader context in mind. It is too easy for patent holders to exploit low-quality patents and extract money from businesses that are very likely not infringing. Addressing the standard for allowing alleged infringers

to recover attorneys' fees is a first step in addressing this larger problem.

A. Abusive patent enforcement practices are pervasive and harmful.

Abusive patent practices are closely linked to a business model known colloquially as "patent trolling." A "patent troll,"[1] or more formally, a "patent assertion entity," does not invent new technology, make or sell products, or provide services to clients. A PAE buys up patents from others and makes money solely by asserting infringement and extracting licensing fees and settlement payments.

Some common strategies drive the licensing and litigation efforts of PAEs:

- They rely on "low-quality" patents, *see* Letter from Amazon.com, Inc., AOL Inc., *et al.* to Senator Patrick J. Leahy, *et al.*, 2 (July 30, 2013),[2] often vague or broadly worded patents that purport to cover technology-related business methods, *id.*
- They form shell corporations that hide the true owner, *see*, *e.g.*, Tom Ewing & Robin Feldman, *The Giants Among Us*,

---

[1] In the classic fairy tale, the troll can extract a toll for crossing the bridge merely because the troll is too large and powerful to fight.

[2] *Available at* http://internetassociation.org/wp-content/uploads/2013/07/Letter-_-73013.pdf

2012 Stan. Tech. L. Rev. 1, 4-8 (network of over 1,000 shells associated with a single PAE "makes it tremendously difficult to detect and trace the company's activities"), and, unlike ordinary market competitors, have no products or services that might be at risk of a counterclaim, *see* Brian T. Yeh, Cong. Research Serv., R42668, *An Overview of the "Patent Trolls" Debate* 13 (2013).

- They have no assets other than the patent and few discoverable documents or witnesses, so they face little litigation risk, *see* Randall R. Rader, Coleen V. Chien & David Hricik, *Make Patent Trolls Pay in Court*, N.Y. Times, June 4, 2013.

- They send letters "to thousands of recipients indiscriminately and appear to target unsophisticated parties who would be unlikely to be involved in a patent dispute," Democratic Staff of H. Comm. on Energy and Commerce, 113th Cong., *Memorandum regarding Hearing on "The Impact of Patent Assertion Entities or. Innovation and the Economy"* (Nov. 13, 2013).

- They may look for targets that are particularly vulnerable and reach early settlements that fund subsequent litigation, *see* David Schwartz, *The Rise of Contingent Fee Representation in Patent Litigation*, 64 Ala. L. Rev. 335, 368-69 (2012).

- They "propose settlement amounts that are lower, often far lower, than the amount that it will cost an accused infringer to defend itself." *Id.* at 370.

- They often target end users of technology rather than manufacturers because "[f]or patent holders whose rights are worth relatively little compared to the costs of litigation . . . serial nuisance filings against resellers or users quickly become more profitable than litigating on the merits against the original manufacturer." Brian J. Love & James C. Yoon, *Expanding Patent Law's Customer Suit Exception*, 93 B.U. L. Rev. 1605, 1613 (2013).

These abusive practices have a real cost. A new study estimates that patent assertions by PAEs cost about $29 billion in 2011. *See* James Bessen & Michael Meurer, *The Direct Costs from NPE Disputes*, 99 Cornell L. Rev. (forthcoming 2014) (manuscript at 41). That figure includes the costs of non-litigated assertions, settlement costs and litigation costs, *id.* at 3-4, 15, but does not account for diverted resources, delays in new products, and loss of market share. *Id.* at 41.

The financial costs of abusive patent enforcement are felt by all types and sizes of businesses. Earlier this year, dozens of large companies called for Congress to adopt patent reform because "[w]asteful and often frivolous litigation is burdening businesses and innovators across America." Amazon Letter, *supra*, at

1. The letter notes the "increasing threat of extortive demands based on low-quality patents." *Id.* at 2.

Smaller businesses are equally hard hit. In fact, fifty-nine percent of companies sued for patent infringement are small and medium businesses. Bessen, *supra*, at 41. Their legal costs typically represent a higher percentage of overall revenues than large business targets. *Id.* For example, MyWebGrocer, a 200-employee business, has faced six or seven threatening letters from patent trolls over the last several years, and paid "well over $100,000 in attorneys' fees." Dan D'Ambrosio, *Patent Trolls Take on Vermont Businesses*, Burlington Free Press, Nov. 7, 2013. The CEO of a five-person e-commerce startup told the Washington Post that after salaries, his largest expense is legal fees related to a patent lawsuit. He called it "the single worst thing to happen to me since I started the company." Timothy B. Lee, *Here's What It Feels Like to be Sued by a Patent Troll*, Washington Post, July 18, 2013.

And it is not just tech companies. Mom-and-pop businesses and non-profit organizations have also been threatened with patent litigation. *See, e.g.*, Drew Hendricks, *Three Measures Small Businesses Should Take to Avoid Patent Trolls*, Forbes.com (Sept. 30, 2013).[3]

---

[3] *Available at* http://www.forbes.com/sites/drewhendricks/2013/09/30/3-measures-small-businesses-should-take-to-avoid-patent-trolls/

PAEs succeed in part because there is so little downside risk to their business model. Their litigation costs and risks are low: discovery demands are not burdensome, lawyers work on contingent fees, and the PAEs do not market their own products or services. *See, e.g.*, Yeh, *supra*, at 13; Rader, *supra* (patent trolls have fewer costs because they have less discoverable documents, witnesses, etc. and they often defer costs through contingent fee arrangements); Ilene Knable Gotts & Scott Sher, *The Particular Antitrust Concerns with Patent Acquisitions*, 8 Competition Law Int'l 19, 36 (Aug. 2012) (non-practicing entities have advantage because they are not "subject to patent counterclaims"). In contrast, businesses targeted with patent infringement claims face substantial risk, even if the patents are dubious or the infringement claims implausible. Just getting a patent lawyer to provide advice may cost as much as the license fee. Litigation costs are overwhelming.

This uneven playing field gives PAEs an unfair advantage. It allows them to extort payments from companies that lack the will or resources necessary to fight. That outcome undermines the purpose of the patent system, which "is not reward of the individual but the advancement of the arts and sciences." *Sinclair & Carroll Co. v. Interchemical Corp.*, 325 U.S. 327, 330-31 (1945).

PAEs operate within a legal framework that facilitates these abusive practices. The high standard for fee-shifting is only one example of a legal standard that unduly favors the patent holder. Other

examples include: (1) the Federal Circuit's test for personal jurisdiction; (2) lenient pleading standards; and (3) the cost of litigating vague and ambiguous patent claims.

Personal jurisdiction. PAEs do not necessarily want to pursue litigation, but instead seek licensing fees based on a *threat* of litigation. PAEs count on the fact that an accused infringer may be willing to pay a licensing fee if the fee is less than the cost of litigation. *See* John M. Golden, *"Patent Trolls" and Patent Remedies*, 85 Tex. L. Rev. 2111, 2126 (2007). Suppose, however, the accused infringer wants to take on the PAE and "clear the air" of infringement charges by filing a declaratory judgment action. That option advances the societal interests of enforcing only *valid* patents against those persons who are *actually* infringing. *See, e.g., Lear, Inc. v. Adkins*, 395 U.S. 653, 670 (1969) (recognizing "the important public interest in permitting full and free competition in the use of ideas which are in reality a part of the public domain"); *Fogerty v. Fantasy, Inc.*, 510 U.S. 517, 527 (1994) ("a successful defense of a copyright infringement action may further the policies of the Copyright Act every bit as much as a successful prosecution of an infringement claim by the holder of a copyright"). Yet it rarely happens. *See* Aron Levko, Vincent Torres & Joseph Teelucksingh, PricewaterhouseCoopers, *A Closer Look: 2008 Patent Litigation Study: Damages Awards, Success Rates and Time-to-Trial* 10 (2008) (less than ten percent of patent cases filed annually are declaratory judgment actions); *see also* Megan M.

La Belle, *Patent Litigation, Personal Jurisdiction, and Public Good*, 18 Geo. Mason L. Rev. 1, 56 (2010) ("[O]f the thousands of patent cases filed in this country each year, declaratory judgment actions represent only a small percentage."). One reason these actions are so uncommon is the Federal Circuit's patent-specific interpretation of the "minimum contacts" test for personal jurisdiction.

Under current law, an accused infringer willing to file a declaratory judgment action against a PAE nearly always has to file in the jurisdiction where the PAE is incorporated or has its principal place of business. The fact that the PAE contacted the infringer, asserted infringement, and demanded a license fee is not enough. *See Avocent Huntsville Corp. v. Aten Int'l Co.*, 552 F.3d 1324, 1333 (Fed. Cir. 2008). The Federal Circuit has acknowledged that demand letters are purposefully directed at the forum and a declaratory judgment action arises out of the letters. *Silent Drive, Inc. v. Strong Indus.*, 326 F.3d 1194, 1202 (Fed. Cir. 2003). Even so, that court has refused to allow for personal jurisdiction in an action for a declaration of non-infringement based solely on the contacts of patent assertion letters. *Red Wing Shoe Co. v. Hockerson-Halberstadt, Inc.*, 148 F.3d 1355, 1360-61 (Fed. Cir. 1998).

This rule leads to troubling results. Because most products are sold in a national market, PAEs are free to forum shop – and they do. *See, e.g.*, Chester Chuang, *Offensive Venue: The Curious Use of Declaratory Judgment to Forum Shop in Patent Litigation*, 80

Geo. Wash. L. Rev. 1065, 1073 (2012) (noting "rampant forum shopping"). PAEs can selectively litigate the validity and enforceability of their patents in jurisdictions that are most favorable to them. *See* Mark A. Lemley, *Where to File Your Patent Case*, 38 AIPLA Q.J. 4, 8-10 (Fall 2010) (noting, for example, that patentees win 55.1% of adjudicated cases in the Northern District of Texas, compared with only 21% in the District of New Jersey). An accused infringer, on the other hand, may have no option other than litigation in a distant forum. Indeed, in one recent case, a PAE not only threatened litigation but sent a draft complaint for a lawsuit in the accused infringer's home district. Yet when the accused infringer responded by filing a declaratory judgment action, the district court dismissed the case for lack of personal jurisdiction. *Eng'g & Inspection Srvs., LLC v. IntPar, LLC*, 2013 WL 5589737 (E.D. La. Oct. 10, 2013).

Pleading standards. The lenient pleading requirements for patent cases make alleging infringement easy. The accused infringer, as a defendant, has little chance of avoiding discovery and substantial litigation costs in these cases, even if the infringement claims are baseless. Patent holders claiming infringement are insulated from the requirements of *Ashcroft v. Iqbal*, 556 U.S. 662 (2009) and *Bell Atl. Corp. v. Twombly*, 550 U.S. 544 (2007) because of Form 18 of the Federal Rules of Civil Procedure. "[T]o the extent any conflict exists between *Twombly* (and its progeny) and the Forms regarding pleadings

requirements, the Forms control." *K-Tech Telecomms., Inc. v. Time Warner Cable, Inc.*, 714 F.3d 1277, 1283 (Fed. Cir. 2013) ("proper use of a form contained in the Appendix of Forms effectively immunizes a claimant from attack regarding the sufficiency of the pleading"); *R+L Carriers, Inc. v. DriverTech LLC (In re Bill of Lading Transmission & Processing Sys. Patent Litig.)*, 681 F.3d 1323, 1334 (Fed. Cir. 2012) (same).

As one Federal Circuit judge has noted, a "bare allegation of literal infringement" complies with the form. *McZeal v. Sprint Nextel Corp.*, 501 F.3d 1354, 1360 (Fed. Cir. 2007) (Dyk, J., concurring in part and dissenting in part), *quoted approvingly in K-Tech*, 714 F.3d at 1283. Consistent with the Federal Circuit's reading of Form 18, an infringement complaint will survive a motion to dismiss if it includes:

> (1) an allegation of jurisdiction; (2) a statement that the plaintiff owns the patent; (3) a statement that defendant has been infringing the patent 'by making, selling, and using [the device] embodying the patent'; (4) a statement that the plaintiff has given the defendant notice of its infringement; and (5) a demand for an injunction and damages.

K-Tech, 714 F.3d at 1283 (quoting *McZeal*, 501 F.3d at 1357). While "an implausible claim for patent infringement rightly should be dismissed," *id.* at 1284, in practice a mere allegation of infringement is enough. *See, e.g., SHFL Entm't, Inc. v. DigiDeal Corp.*, 2013 WL 5328437, at *3 (D. Nev. Sept. 20, 2013) (following *K-Tech*; denying motion to dismiss where plaintiff

"satisfied the requirements of Form 18"); *Redd Group, LLC v. Glass Guru Franchise Sys., Inc.*, 2013 WL 3462078, at *3 (N.D. Cal. July 8, 2013) (following *K-Tech*; denying motion to dismiss where complaint "literally satisfies the requirements" of the form).

This lesser pleading standard makes it difficult for the courts to dispose of baseless allegations of infringement at an early stage, before significant costs are incurred. "While the hurdle to state a claim for direct patent infringement has never been particularly high . . . it is now practically impossible to dispose of a direct infringement case at the motion to dismiss stage." Richard Blakely Glasgow, *Pleading Edge*, Intellectual Property Magazine 40, at 41 (Dec. 2012/Jan. 2013). This puts additional pressure on alleged infringers to settle even weak infringement claims to avoid high-cost litigation. *Id.* ("Given substantial discovery costs, corporate defendants now face the tough decision of whether to settle marginal direct patent infringement claims before discovery or wait and attempt to dispose of those claims at the summary judgment stage, all the while incurring costs around every corner.").

Vague patent claims. Vague and ambiguous patent claims are asserted against companies that must expend significant resources to evaluate whether the claims apply to their technology. Patent claims are invalid as indefinite if they do not "particularly point[ ] out and distinctly claim[ ] the subject matter which the inventor or a joint inventor regards as the invention." 35 U.S.C. § 112(b). This is intended to

"guard against unreasonable advantages to the patentee" by making the inventor "inform the public during the life of the patent of the limits of the monopoly asserted, so that it may be known which features may be safely used or manufactured without a license and which may not." *General Elec. Co. v. Wabash Appliance Corp.*, 304 U.S. 364, 369 (1938) (quotation omitted).

In *Exxon Research & Eng'g Co. v. United States*, 265 F.3d 1371 (Fed. Cir. 2001), the Federal Circuit weakened the indefiniteness requirements. Before *Exxon*, the court required "that the claims at issue [be] sufficiently precise to permit a potential competitor to determine whether or not he is infringing." *See Morton Int'l, Inc. v. Cardinal Chem. Co.*, 5 F.3d 1464, 1470 (Fed. Cir. 1993). Although *Exxon* nominally retained that standard, the court reasoned that a claim is sufficient unless it is "insolubly ambiguous, and no narrowing construction can properly be adopted." *Exxon*, 265 F.3d at 1375; *see also Biosig Instruments, Inc. v. Nautilus, Inc.*, 715 F.3d 891, 898 (Fed. Cir. 2013) ("A claim is indefinite only when it is not amenable to construction or insolubly ambiguous." (quotation omitted)). Thus, "[i]f the meaning of the claim is discernible, even though the task may be formidable and the conclusion may be one over which reasonable persons will disagree, we have held the claim sufficiently clear to avoid invalidity on indefiniteness grounds." *Exxon*, 265 F.3d at 1375. This low bar allows for more ambiguous patent claims. And that, in turn, means that patentees are more likely to

assert infringement based on unreasonably broad and vague claim construction.

In short, distorted financial incentives and a favorable legal climate have nurtured PAEs and facilitated their ability to profit from dubious patents. PAEs brought over sixty percent of the patent enforcement actions filed in 2012. *See* RPX Corporation, *2012 NPE Activity Report* 4 (2013). They prevailed in less than a quarter of the cases heard on the merits. Chris Barry, Ronen Arad, Alex Johnston, Alison Parent, Landan Ansell, and Mike Arnold, PricewaterhouseCoopers, *2012 Patent Litigation Study* 5 (2012) (based on statistics from 1995 through 2011, non-practicing entities (NPEs) have been successful 23% of the time). Another study puts the success rate even lower, finding that non-practicing entities won only 9.2% of cases litigated to judgment. John R. Allison, Mark A. Lemley & Joshua Walker, *Patent Quality and Settlement Among Repeat Patent Litigants*, 99 Geo. L.J. 677, 693-94 (2011). Yet patent trolls continue to prosper – and to file lawsuits. Last year saw the filing of a record 5,189 new patent cases. Judicial Business of the United States Courts, *2012 Annual Report of the Director*, Table C-7;[4] Barry, *supra*, at 6.

---

[4] *Available at* http:www.uscourts.gov/uscourts/Statistics/JudicialBusiness/2012/appendices/C07Sep12.pdf.

B. The onerous fee-shifting standard for prevailing alleged infringers exacerbates abusive patent practices.

Awarding attorneys' fees to the prevailing party in a patent litigation suit deters both "blatant, blind, willful infringement of valid patents" *and* "the equally improper bringing of clearly unwarranted suits on obviously invalid or unenforceable patents." *Mathis v. Spears*, 857 F.2d 749, 754 (Fed. Cir. 1988). The legislative history confirms that Congress intended the fee-shifting provision "to enable the court to prevent a gross injustice to the alleged infringer." S. Rep. No. 1503, 79th Cong., 2d Sess. (1946), *reprinted in* 1946 U.S. Code Congressional Service 1386, 1387.

But it does not usually work that way. An accused infringer that seeks to recover some of the costs of fighting unfounded infringement allegations faces an uphill battle. Absent litigation misconduct or fraud on the Patent and Trademark Office, the accused infringer must show that the patentee's claim was *both* objectively baseless and subjectively made in bad faith. *See Brooks Furniture Mfg., Inc. v. Dutailier Int'l, Inc.*, 393 F.3d 1378, 1381 (Fed. Cir. 2005). That is, the accused infringer must prove first that "no reasonable litigant could reasonably [have] expect[ed] success on the merits." *Dominant Semiconductors Sdn. Bhd. v. OSRAM GmbH*, 524 F.3d 1254, 1260 (Fed. Cir. 2008) (quotation omitted). And after meeting that stringent standard, the accused infringer must further prove "that lack of objective foundation for the claim 'was either known or so

obvious that it should have been known' by the party asserting the claim." *Highmark, Inc. v. Allcare Health Mgmt. Sys., Inc.*, 687 F.3d 1300, 1309 (Fed. Cir. 2012), *cert. granted*, 2013 WL 1217353, 81 USLW 3562, 82 USLW 3177 (U.S. Oct. 01, 2013) (No. 12-1163) (quoting *In re Seagate Tech., LLC*, 497 F.3d 1360, 1371 (Fed. Cir. 2007)). As a practical matter, the standard is little different from the general proscription of Rule 11. *See* Fed. R. Civ. P. 11; *see also Raylon, LLC v. Complus Data Innovations, Inc.*, 700 F.3d 1361, 1368 (Fed. Cir. 2012) (applying the standard used to determine whether a claim was objectively baseless in evaluating Rule 11 sanctions).

The Federal Circuit describes the test as the same for both patentees and alleged infringers. *See Highmark*, 687 F.3d at 1309 ("This same objective/subjective standard applies for both patentees asserting claims of infringement and alleged infringers defending against claims of infringement.") (citing *iLOR, LLC v. Google, Inc.*, 631 F.3d 1372, 1377 (Fed. Cir. 2011)). As petitioner argues, however, that is not the case. *See* Pet. Br. 27-29. The objective part of the test is easier to satisfy for patentees. A successful patentee seeking a fee award must show "that the infringer acted despite an objectively high likelihood that its actions constituted infringement of a valid patent." *In re Seagate*, 497 F.3d at 1371. Proving an objectively "high likelihood" of infringement is not equivalent to proving that a claim of infringement was baseless – to proving, that is, that *no* reasonable litigant could have expected to succeed.

If the standards were truly equivalent, a prevailing accused infringer would have to show that the patentee's infringement claim had an objectively low likelihood of success.

As the Court has explained in the context of copyrights, "[p]revailing plaintiffs and prevailing defendants are to be treated alike" for the purposes of calculating attorneys' fees. *Fogerty*, 510 U.S. at 534-35 ("Because the Court of Appeals erroneously held petitioner, the prevailing defendant, to a more stringent standard than that applicable to a prevailing plaintiff, its judgment is reversed[.]"). The fee-shifting provision in 35 U.S.C. § 285 applies to any prevailing party. Congress adopted a uniform standard and the courts should enforce it in a uniform manner. *See, e.g.*, *Christiansburg Garment Co. v. EEOC*, 434 U.S. 412, 419 (1978) (refusing to assume that Congress intended to "distort" the "fair adversary process" "by giving the private plaintiff substantial incentives to sue, while foreclosing to the defendant the possibility of recovering his expenses in resisting even a groundless action unless he can show that it was brought in bad faith."); *Ruckelshaus v. Sierra Club*, 463 U.S. 680, 691 (1983) ("[S]imilar attorney's fee provisions should be interpreted *pari passu*."). By adopting a standard that disfavors prevailing alleged infringers, the Federal Circuit has effectively re-written the statute.

The inequity in the current standard is not hypothetical. Patent holders are more likely than accused infringers to recover attorneys' fees. *See* Writ. Pet. 30. Indeed, several recent Federal Circuit decisions show

how demanding the current standard is. The Federal Circuit has reversed a district court's finding of objective baselessness, in whole or part, three times in just over a year. *See Highmark*, 687 F.3d 1300; *Precision Links Inc. v. USA Prods. Group, Inc.*, 527 F. App'x 852 (Fed. Cir. 2013); *Checkpoint Sys., Inc. v. All-Tag Sec. S.A.*, 711 F.3d 1341 (Fed. Cir. 2013).[5]

This imbalance matters. Alleged infringers are more likely than patentees to succeed on the merits of a case. The vast majority of patent cases that are litigated to judgment are unsuccessful. Paul M. Janicke & LiLan Ren, *Who Wins Patent Infringement Cases?*, 34 AIPLA Q.J. 1, 5 (Winter 2006). Patent holders file many meritless cases. The accused infringer, however, has little economic incentive to challenge the validity or the scope of the patent.

The difficulty of meeting the standard for fee shifting discourages alleged infringers from challenging patentees even when a challenge is appropriate.[6]

---

[5] The Federal Circuit affirmed a district court's finding of objective baselessness in *Taurus IP, LLC v. DaimlerChrysler Corp.*, 726 F.3d 1306 (Fed. Cir. 2013).

[6] The experience of the petitioner in *Highmark Inc. v. Allcare Management Systems, Inc.*, No. 12-1163, confirms that the Federal Circuit's standard is unduly stringent. Highmark was targeted by a PAE. Following the "patent troll" business model, the PAE threatened expensive litigation and demanded a licensing fee. The district court described the PAE as engaging in "the sort of conduct that gives the term 'patent troll' its negative connotation." *Highmark, Inc. v. Allcare Health Management Systems, Inc.*, 706 F. Supp. 2d 713, 727 n.5 (N.D. Tex.

(Continued on following page)

Alleged infringers settle cases or pay licensing fees for meritless patent claims. *See* Robin Feldman, *Patent Demands and Startup Companies: The View from the Venture Capital Community* 49, *available at* http://ssrn.com/abstract_id=2346338 (quoting one company's spokesperson: "We spent millions to settle pretty much completely spurious claims. The common approach that these 'entities' took was: – make a claim – try to defend it as best they could – eventually offer to settle by observing that it would cost us $3-5 million to fight it and we might lose, vs. the [$]2-3 million they offer to settle initially . . . we'd work to negotiate them down to $1-2 million, hold our nose, and pay.").

Less than twenty percent of patent litigation is resolved by a court on the merits. The vast majority of cases settle before judgment. *See* Allison, *supra*, at 689. The settlement rate is not surprising, given the incredible costs that alleged infringers face. Between 1985 and 2004, alleged infringers paid, on average,

---

2010), *vacated in part*, 732 F. Supp. 2d 653, *rev'd in part*, 687 F.3d 1300 (Fed. Cir. 2012), *cert. granted*, 2013 WL 1217353, 81 USLW 3562, 82 USLW 3177 (U.S. Oct. 01, 2013). The district court found that the PAE "engaged in questionable and, at times, deceitful conduct," *id.*, and pursued "meritless allegations after the lack of merit became apparent," *id.* at 730. Even against this backdrop, the Federal Circuit reversed the district court's fee award in substantial part. 687 F.3d at 1319. In the States' view, given the district court's findings and conclusions, Highmark should prevail even under the Federal Circuit's current standard. In any event, the district court's fee award in *Highmark* should be affirmed under a correct interpretation of the "exceptional case" standard.

$2.46 million in defense-related expenses for patent litigation that went through trial. *See* Emily H. Chen, *Making Abusers Pay: Deterring Patent Litigation by Shifting Attorneys' Fees*, 28 Berkeley Tech. L.J. 351, 357 (2013). Settlement offers or royalty fees are commonly significantly less than litigation expenses. *See, e.g.*, *Eon-Net LP v. Flagstar Bancorp*, 653 F.3d 1314, 1326-27 (Fed. Cir. 2011) (noting that patentee filed suit against over 100 alleged infringers and quickly settled for far less than litigation costs; defendant who did litigate expended $600,000 and avoided paying $25,000-$75,000 in royalties). In fact, the Government Accountability Office has observed that some of the economic literature "suggests that accused infringers have an incentive to settle quickly to avoid the uncertainty of claim construction and high litigation costs." *See* U.S. Gov't Accountability Office, GAO-13-465, *Assessing Factors That Affect Patent Infringement Litigation Could Help Improve Patent Quality* 32 (2013).

On the other hand, the expenses of litigation are not felt as acutely by patentees seeking to enforce their patents because of contingency fee arrangements. *See* Schwartz, *supra*, at 346 (while amount of contingent patent litigation is unknown, "there was widespread agreement that the amount had increased in the last ten years"); *see also* Colleen V. Chien, *Turn the Tables on Patent Trolls*, Forbes, August 9, 2011, *available at* http://www.forbes.com/sites/ciocentral/2011/08/09/turn-the-tables-on-patent-trolls/ (explaining that PAEs "lower their committed capital

by using contingent fee lawyers"). Contingency fee arrangements allow patentees to pursue litigation against alleged infringers at very low costs. That, in turn, drives aggressive and unjustified claims. Many observers have noted that "patentees are too often 'pushing the envelope' in quests for financial return on their investment in patents. They overvalue their patents and assign an unrealistic scope to the language of the patent claims, driven perhaps by what they thought the claims ought to have said." Janicke, *supra*, at 39-40 (footnotes omitted).

The Federal Circuit's fee-shifting standard compounds this problem, by making it too hard for accused infringers to recover attorneys' fees. As explained below, the Court should adopt an evenhanded standard that allows either party, in an appropriate case, to recover after defeating an unreasonable claim.

II. The Court should overrule the Federal Circuit's inflexible two-prong test and adopt a reasonable, evenhanded fee-shifting standard that promotes the goals of the patent system.

Patents are a time-limited monopoly designed to encourage innovation. *See* U.S. Const. art. I, § 8, cl. 8 ("To promote the Progress of Science and useful Arts, by securing for limited times to . . . Inventors the exclusive Right to their respective . . . Discoveries . . . "). This limited monopoly calls for "a proper

balance between exclusivity and competition." Federal Trade Commission, *The Evolving IP Marketplace: Aligning Patent Notice and Remedies with Competition* 1 (2011). The Federal Trade Commission has observed that "[i]nvalid or overbroad patents disrupt that balance by discouraging follow-on innovation, preventing competition, and raising prices through unnecessary licensing and litigation." *Id.*

The Court should construe § 285 in a way that promotes this balance. Making it easier for an accused infringer to recover attorneys' fees in an exceptional case is consistent with the purposes of the patent system. An alleged infringer that stands up to unreasonable allegations of patent infringement should not be left with enormous legal bills. The possibility of recovering fees would provide an incentive for accused infringers to litigate – and even better, the risk of having to pay those fees may deter unreasonable claims in the first place.

This Court has acknowledged that patent litigation has value. In *General Motors Corp. v. Devex Corp.*, 461 U.S. 648 (1983), Justice Stevens explained that "a patent challenge in the courts permits a more informed decision regarding the merits of a particular patent. And, as we have long recognized, 'It is as important to the public that competition should not be repressed by worthless patents, as that the patentee of a really valuable invention should be protected in his monopoly.'" *Id.* at 658 (quoting *Pope Mfg. Co. v. Gormully*, 144 U.S. 224, 234 (1892)) (Stevens, J., concurring).

The chief judge of the Federal Circuit has also acknowledged the risk of weak patent infringement claims, and has noted that they are becoming more prevalent. *See* Rader, *supra*. Chief Judge Rader has encouraged applying 35 U.S.C. § 285 to combat these weak claims, pointing out that lower courts "must look more closely for signs that a patent lawsuit was pursued primarily to take improper advantage of a defendant – that is, using the threat of litigation cost, rather than the merits of a claim, to bully a defendant into settling." *Id.* Signs of this bullying behavior might include suing hundreds of end users rather than the makers of the allegedly infringing product, offering a fraction of defense costs as settlement, or refusing to stop pursuing licenses even after an unfavorable decision. *See id.*

For courts to take Chief Judge Rader's advice and look more closely at the actions and motives of patentees in evaluating attorneys' fee awards, there must be a fair standard for finding a case exceptional. *See* 35 U.S.C. § 285 (providing for discretionary award of attorneys' fees only in exceptional cases). Fee awards cannot be limited to those cases where "no reasonable litigant could reasonably expect success on the merits." *Dominant Semiconductors Sdn. Bhd.*, 524 F.3d at 1260 (quotation omitted). That stringent standard is rarely met, *see* Chen, *supra*, at 362, and is not a useful deterrent. Indeed, the Court should dispense with both the objective baselessness and subjective bad faith standards. Neither requirement is part of the statute. The Federal Circuit has

raised the bar too high. Fee awards are limited to "exceptional" cases, but exceptional does not mean frivolous or brought in bad faith.

The Court should instead hold that district courts have discretion to award fees where the patentee's claim had an objectively low likelihood of success and a fee award is otherwise appropriate. That more flexible standard will allow a district court to consider other equitable factors that support a fee award, including the kind of abusive and bullying practices described by Chief Judge Rader. It will ease the burden on prevailing alleged infringers that seek attorneys' fees, while adhering to the "exceptional" requirement of 35 U.S.C. § 285. Legitimate cases, where patentees reasonably believe that a valid patent has been infringed, will not have an objectively low likelihood of success. These patentees would not be subject to fee-shifting for simply being wrong. However, patentees that enforce broadly with little concern for the validity of the patent or the allegedly infringing conduct will assume the risk of their carelessness. If they choose to bring such exceptional cases, they will bear the financial burden if unsuccessful.

The fee-shifting standard is important not just for motivating alleged infringers to litigate weak patent claims. It matters, as well, to companies that must decide how to respond to patent enforcement letters. There is little data about the licensing arrangements that arise from patent letters, but without question, for every infringement suit filed, many

more demand letters are sent. *See* GAO-13-465, *supra*, at 27 n.51 (of the seventy-nine companies that reported receiving demand letters, two-thirds were never sued). Without a reasonable chance of recovering attorneys' fees, recipients of these letters often agree to licenses before a lawsuit is filed. *See* La Belle, *supra*, at 72 ("In recent years . . . many patent holders . . . have been using cease-and-desist letters to coerce alleged infringers into license agreements rather than to inform others of their patent rights or to urge the cessation of allegedly infringing activity."). The targets often never even evaluate the validity of the patent or the scope of the patentee's claims. There is no good measure of the costs incurred by such unlitigated assertion efforts.

Making attorneys' fees available to prevailing alleged infringers if the patentee's claims have an objectively low likelihood of success will begin to level the playing field. It will deter meritless claims and give accused infringers that choose to litigate some opportunity for redress. Correcting the distorted incentives that facilitate abusive patent enforcement practices will help align parties' interests with the purpose of patent rights – protecting a limited monopoly for valid patents that are enforced in accordance with their claims.

CONCLUSION

Consistent with 35 U.S.C. § 285, a district court should have discretion to award fees to a successful accused infringer if the patent holder's claims had an objectively low likelihood of success and relevant factors make a fee award appropriate.

Respectfully submitted,

WILLIAM H. SORRELL
Vermont Attorney General
BRIDGET ASAY
Counsel of Record
NAOMI SHEFFIELD
Assistant Attorneys General
109 State St.
Montpelier, VT 05609
(802) 828-5500
basay@atg.state.vt.us

JON BRUNING
Nebraska Attorney General
KATHERINE J. SPOHN
Deputy Attorney General
2115 State Capitol Building
Lincoln, NE 68509
(402) 471-2862
katie.spohn@nebraska.gov

[Additional Counsel]

LUTHER STRANGE
Attorney General
STATE OF ALABAMA

SAMUEL S. OLENS
Attorney General
STATE OF GEORGIA

MICHAEL C. GERAGHTY
Attorney General
STATE OF ALASKA

DAVID M. LOUIE
Attorney General
STATE OF HAWAII

THOMAS C. HORNE
Attorney General
STATE OF ARIZONA

TOM MILLER
Attorney General
STATE OF IOWA

DUSTIN M. MCDANIEL
Attorney General
STATE OF ARKANSAS

GREGORY F. ZOELLER
Attorney General
STATE OF INDIANA

PAMELA JO BONDI
Attorney General
STATE OF FLORIDA

DEREK SCHMIDT
Attorney General
STATE OF KANSAS

JAMES D. "BUDDY" CALDWELL
Attorney General
STATE OF LOUISIANA

JANET T. MILLS
Attorney General
STATE OF MAINE

MARTHA COAKLEY
Attorney General
COMMONWEALTH OF MASSACHUSETTS

DOUGLAS F. GANSLER
Attorney General
STATE OF MARYLAND

BILL SCHUETTE
Attorney General
STATE OF MICHIGAN

LORI SWANSON
Attorney General
STATE OF MINNESOTA

JIM HOOD
Attorney General
STATE OF MISSISSIPPI

CHRIS KOSTER
Attorney General
STATE OF MISSOURI

TIMOTHY C. FOX
Attorney General
STATE OF MONTANA

GARY K. KING
Attorney General
STATE OF NEW MEXICO

WAYNE STENEHJEM
Attorney General
STATE OF NORTH DAKOTA

MICHAEL DEWINE
Attorney General
STATE OF OHIO

ELLEN F. ROSENBLUM
Attorney General
STATE OF OREGON

KATHLEEN G. KANE
Attorney General
COMMONWEALTH OF PENNSYLVANIA

MARTY J. JACKLEY
Attorney General
STATE OF SOUTH DAKOTA

BRIAN L. TARBET
Acting Attorney General
STATE OF UTAH

ROBERT W. FERGUSON
Attorney General
STATE OF WASHINGTON

PETER K. MICHAEL
Attorney General
STATE OF WYOMING

Dated: DECEMBER 9, 2013

AMICUS CURIAE BRIEF

RECORD AND BRIEFS

FILED
DEC - 9 2013
OFFICE OF THE CLERK
SUPREME COURT, U.S.

Nos. 12-1184 & 12-1163

IN THE

Supreme Court of the United States

OCTANE FITNESS, LLC,
Petitioner,
v.
ICON HEALTH & FITNESS, INC.,
Respondent.

HIGHMARK INC.,
Petitioner,
v.
ALLCARE HEALTH MANAGEMENT SYSTEMS, INC.,
Respondent.

On Writs of Certiorari to the United States Court of Appeals for the Federal Circuit

BRIEF OF YAHOO! INC., THE NEW YORK TIMES COMPANY, NETAPP, INC., MEDTRONIC, INC., GENERAL MILLS, INC., EMC CORPORATION, AND BOSTON SCIENTIFIC CORPORATION AS *AMICI CURIAE* IN SUPPORT OF PETITIONERS

JOHN M. WHEALAN
4613 Merivale Rd.
Chevy Chase, MD 20815
(202) 994-2195
Counsel for Amici Curiae

KEVIN T. KRAMER
Deputy General Counsel – Intellectual Property
YAHOO! INC.
701 First Ave.
Sunnyvale, CA 94089
Counsel for Yahoo! Inc.

JEFFREY A. LAMKEN
Counsel of Record
MARTIN V. TOTARO
MOLOLAMKEN LLP
The Watergate, Suite 660
600 New Hampshire Ave., NW
Washington, D.C. 20037
(202) 556-2000
jlamken@mololamken.com
Counsel for Amici Curiae

Additional Counsel Listed on Inside Cover

WILSON-EPES PRINTING CO., INC. – (202) 789-0096 – WASHINGTON, D.C. 20002

Library of Congress
Law Library

LUKE DOHMEN
Chief Patent Counsel
BOSTON SCIENTIFIC CORP.
1 Scimed Place
Maple Grove, MN 55311
Counsel for Boston Scientific Corp.

KRISHNENDU GUPTA
Senior Vice President, Deputy General Counsel
EMC CORPORATION
176 South Street
Hopkinton, MA 01748
Counsel for EMC Corp.

CHAD HANSON, PH.D.
Senior Legal Counsel, IP Litigation
MEDTRONIC, INC.
710 Medtronic Parkway
LC300
Minneapolis, MN 55432
Counsel for Medtronic, Inc.

DOUGLAS LUFTMAN
Vice President, Innovation Services & Chief Intellectual Property Counsel
NETAPP, INC.
495 East Java Drive
Sunnyvale, CA 94089
Counsel for NetApp, Inc.

DAVID E. MCCRAW
Vice President & Assistant General Counsel
THE NEW YORK TIMES COMPANY
620 Eighth Avenue
New York, NY 10018
Counsel for The New York Times Company

WILLIAM D. MILLER
Chief Intellectual Property Counsel
GENERAL MILLS, INC.
Number One General Mills Boulevard
Minneapolis, MN 55426
Counsel for General Mills, Inc.

QUESTIONS PRESENTED

The question presented in No. 12-1184 is: Whether the Federal Circuit correctly construed the "exceptional case" standard in 35 U.S.C. § 285 to require both objective baselessness and subjective bad faith.

The question presented in No. 12-1163 is: Whether a district court's finding that a case is "exceptional" for purposes of 35 U.S.C. § 285 is reviewed on appeal de novo or for abuse of discretion.

TABLE OF CONTENTS

	Page
Questions Presented	i
Interest Of *Amici Curiae*	1
Summary Of Argument	3
Argument	5
I. Section 285's Capacious "Exceptional Cases" Standard Encompasses Circumstances Where Fee-Shifting Avoids Injustice Or Inequity	6
A. "Exceptional Cases" Means "Exceptional Cases"—Not Just Cases That Are Both Objectively Baseless And Pursued In Subjective Bad Faith	6
B. Pre-Enactment Practice Makes Clear That § 285 Permits Fee-Shifting As Appropriate To Avoid Injustice Or Inequity	8
C. The Federal Circuit's Current Test Departs From The Standard Applied In Other Circuits And, Until 2005, In The Federal Circuit Itself	11
D. The Federal Circuit's Standard Is Contrary To Systemic Interests	14
II. The Federal Circuit's Standard Creates Inappropriate And Imbalanced Incentives	17
A. The Federal Circuit's Standard Imposes Asymmetrical Burdens That Disfavor Defendants	17

TABLE OF CONTENTS—Continued

Page

B. Flexibility Is Needed To Deter Plaintiffs From Externalizing Costs 21

1. Patent Litigation Is Extraordinarily Costly 21

2. The Federal Circuit's Standard Encourages Marginal Claims And Aggressive Strategies 24

C. This Court Should Restore §285 To Its Intended Scope So That It Can Serve Its Intended Purpose 27

III. District Court Exceptional-Case Determinations Should Be Reviewed For Abuse Of Discretion 29

A. Section 285's Text And History Support Review Under An Abuse-Of-Discretion Standard 29

B. This Court's Precedents Support Abuse-Of-Discretion Review 30

Conclusion 33

Appendix A – List Of *Amici Curiae* 1a

TABLE OF AUTHORITIES

Page(s)

CASES

Abraskin v. *Entrecap Corp.*, 55 F. Supp. 2d 224 (S.D.N.Y. 1999) 27

Algren Watch Findings Co. v. *Kalinsky*, 197 F.2d 69 (2d Cir. 1952) 10, 29

ALPO Petfoods, Inc. v. *Ralston Purina Co.*, 913 F.2d 958 (D.C. Cir. 1990) 32

Arbrook, Inc. v. *Am. Hosp. Supply Corp.*, 645 F.2d 273 (5th Cir. 1981) 12

Alyeska Pipeline Serv. Co. v. *Wilderness Soc'y*, 421 U.S. 240 (1975) 7

Associated Plastics Cos. v. *Gits Molding Corp.*, 182 F.2d 1000 (7th Cir. 1950) 9

Athletic Alts., Inc. v. *Prince Mfg., Inc.*, 73 F.3d 1573 (Fed. Cir. 1996) 22

BASF Corp. v. *Old World Trading Co.*, 41 F.3d 1081 (7th Cir. 1994) 32

BE & K Constr. Co. v. *NLRB*, 536 U.S. 516 (2002) 18

Beckman Instruments, Inc. v. *LKB Produkter AB*, 892 F.2d 1547 (Fed. Cir. 1989) 8

Blonder-Tongue Labs., Inc. v. *Univ. of Ill. Found.*, 402 U.S. 313 (1971) 20

Blue Dane Simmental Corp. v. *Am. Simmental Ass'n*, 178 F.3d 1035 (8th Cir. 1999) 32

Boss Control, Inc. v. *Bombardier Inc.*, 410 F.3d 1372 (Fed. Cir. 2005) 24

Brooks Furniture Mfg., Inc. v. *Dutailier Int'l Inc.*, 393 F.3d 1378 (Fed. Cir. 2005) ... *passim*

TABLE OF AUTHORITIES—Continued

Page(s)

Campbell v. *Spectrum Automation Co.*, 601 F.2d 246 (6th Cir. 1979) 29

Colortronic Reinhard & Co., K.G. v. *Plastic Controls, Inc.*, 668 F.2d 1 (1st Cir. 1981) 12

Conn. Nat'l Bank v. *Germain*, 503 U.S. 249 (1992) 7

Cooter & Gell v. *Hartmarx Corp.*, 496 U.S. 384 (1990) 30, 31

Cybor Corp. v. *FAS Techs., Inc.*, 138 F.3d 1448 (Fed. Cir. 1998) (en banc) 30

Doran v. *Salem Inn, Inc.*, 422 U.S. 922 (1975) 32

eBay Inc. v. *MercExchange, L.L.C.*, 547 U.S. 388 (2006) 13, 23, 26, 29

Eltech Sys. Corp. v. *PPG Indus., Inc.*, 903 F.2d 805 (Fed. Cir. 1990) 8, 13

Eon-Net LP v. *Flagstar Bancorp*, 653 F.3d 1314 (Fed. Cir. 2011) 14

Evans v. *Jeff D.*, 475 U.S. 717 (1986) 32

Farrar v. *Hobby*, 506 U.S. 103 (1992) 7

FilmTec Corp. v. *Hydranautics*, 67 F.3d 931 (Fed. Cir. 1995) 32

Fitzgerald v. *Barnstable Sch. Comm.*, 555 U.S. 246 (2009) 9

Fogerty v. *Fantasy, Inc.*, 510 U.S. 517 (1994) 7, 8, 17, 19

Gall v. *United States*, 552 U.S. 38 (2007) 32

ICU Med., Inc. v. *Alaris Med. Sys., Inc.*, 558 F.3d 1368 (Fed. Cir. 2009) 12

TABLE OF AUTHORITIES—Continued

Page(s)

In re Katz Interactive Call Processing Patent Litig., 639 F.3d 1303 (Fed. Cir. 2011) 25

In re Seagate Tech., LLC, 497 F.3d 1360 (Fed. Cir. 2007) (en banc) 18

Int'l Star Class Yacht Racing Ass'n v. *Tommy Hilfiger, U.S.A., Inc.*, 80 F.3d 749 (2d Cir. 1996) 32

Johnson v. *Jones*, 149 F.3d 494 (6th Cir. 1998) 32

K-Tech Telecomm., Inc. v. *Time Warner Cable, Inc.*, 714 F.3d 1277 (Fed. Cir. 2013) 22

KSR Int'l Co. v. *Teleflex, Inc.*, 550 U.S. 398 (2007) 15, 20

Lear, Inc. v. *Adkins*, 395 U.S. 653 (1969) 20

Mac's Shell Serv., Inc. v. *Shell Oil Prods. Co.*, 559 U.S. 175 (2010) 9

Mach. Corp. of Am. v. *Gullfiber AB*, 774 F.2d 467 (Fed. Cir. 1985) 11, 13

McZeal v. *Sprint Nextel Corp.*, 501 F.3d 1354 (Fed. Cir. 2007) 22

MedImmune, Inc. v. *Genentech, Inc.*, 549 U.S. 118 (2007) 20

Medtronic Navigation, Inc. v. *BrainLAB Medizinische Computersysteme GmbH*, 603 F.3d 943 (Fed. Cir. 2010) 27

Missouri v. *McNeely*, 133 S. Ct. 1552 (2013) 8

Monolithic Power Sys., Inc. v. *O2 Micro Int'l Ltd.*, 726 F.3d 1359 (Fed. Cir. 2013) 14

Nat'l Ass'n of Prof'l Baseball Leagues, Inc. v. *Very Minor Leagues, Inc.*, 223 F.3d 1143 (10th Cir. 2000) 32

TABLE OF AUTHORITIES—Continued

Page(s)

Nat'l Bus. Forms & Printing, Inc. v. *Ford Motor Co.*, 671 F.3d 526 (5th Cir. 2012)..... 32

Newport News Holdings Corp. v. *Virtual City Vision, Inc.*, 650 F.3d 423 (4th Cir. 2011)..... 32

Noxell Corp. v. *Firehouse No. 1 Bar-B-Que Rest.*, 771 F.2d 521 (D.C. Cir. 1985)..... 6

Park-In-Theatres, Inc. v. *Perkins*, 190 F.2d 137 (9th Cir. 1951)..... 10, 13

Phonometrics, Inc. v. *Hospitality Franchise Sys., Inc.*, 203 F.3d 790 (Fed. Cir. 2000)..... 22

Pierce v. *Underwood*, 487 U.S. 552 (1988)..... 31

Prof'l Real Estate Investors, Inc. v. *Columbia Pictures Indus., Inc.*, 508 U.S. 59 (1993)..... 17, 18

Read Corp. v. *Portec, Inc.*, 970 F.2d 816 (Fed. Cir. 1992)..... 8

Schoenhaus v. *Genesco, Inc.*, 351 F. Supp. 2d 320 (E.D. Pa. 2005)..... 22

Scotch Whisky Ass'n v. *Majestic Distilling Co.*, 958 F.2d 594 (4th Cir. 1992)..... 19

Secalt S.A. v. *Wuxi Shenxi Constr. Mach. Co.*, 668 F.3d 677 (9th Cir. 2012)..... 32

Securacomm Consulting, Inc. v. *Securacom Inc.*, 224 F.3d 273 (3d Cir. 2000)..... 32

Shingle Prod. Patents, Inc. v. *Gleason*, 211 F.2d 437 (9th Cir. 1954)..... 12

Specmade Prods., Inc. v. *Barnett*, 354 F.2d 229 (5th Cir. 1966)..... 29

Stillman v. *Edmund Scientific Co.*, 522 F.2d 798 (4th Cir. 1975)..... 12

TABLE OF AUTHORITIES—Continued

Page(s)

Therasense, Inc. v. *Becton, Dickinson & Co.*, 649 F.3d 1276 (Fed. Cir. 2011) (en banc) 16

Tire Kingdom, Inc. v. *Morgan Tire & Auto, Inc.*, 253 F.3d 1332 (11th Cir. 2001) 32

Turchan v. *Cincinnati Milling Mach. Co.*, 208 F.2d 228 (6th Cir. 1953) 10, 29

United States v. *Rodgers*, 461 U.S. 677 (1983) 8, 29

White v. *Regester*, 412 U.S. 755 (1973) 31

CONSTITUTIONAL PROVISIONS, STATUTES, AND RULES

U.S. Const. amend. I 17, 18

15 U.S.C. § 1117 ..... 13, 32

35 U.S.C. § 70 9

35 U.S.C. § 103 20

35 U.S.C. § 284 19

35 U.S.C. § 285 ..... *passim*

Fed. R. Civ. P. 11 ..... 12, 30, 31

D.N.J. Pat. R. 3.2A 23

D.N.J. Pat. R. 3.3 23

D.N.J. Pat. R. 3.4 23

D.N.J. Pat. R. 4 23

E.D. Tex. Pat. R. 3-1 23

E.D. Tex. Pat. R. 3-2 23

E.D. Tex. Pat. R. 3-3 23

E.D. Tex. Pat. R. 3-4 23

E.D. Tex. Pat. R. 4-1 23

E.D. Tex. Pat. R. 4-2 23

TABLE OF AUTHORITIES—Continued

Page(s)

E.D. Tex. Pat. R. 4-3 23
E.D. Tex. Pat. R. 4-4 23
N.D. Ill. Pat. R. 2.3 23
N.D. Ill. Pat. R. 2.4 23
N.D. Ill. Pat. R. 2.5 23
N.D. Ill. Pat. R. 3.1 23
N.D. Ill. Pat. R. 3.2 23
N.D. Ill. Pat. R. 3.3 23
N.D. Ill. Pat. R. 4 23

LEGISLATIVE MATERIALS

S. Rep. No. 79-1503 (1946) 7, 9

OTHER AUTHORITIES

Alan M. Ahart, *Attorneys' Fees: The Patent Experience*, 57 J. Pat. Off. Soc'y 608 (1975) 12

John R. Allison *et al.*, *Patent Quality and Settlement Among Repeat Patent Litigants*, 99 Geo. L. J. 677 (2011) 24

James Bessen *et al.*, *The Private and Social Costs of Patent Trolls*, 34 Regulation 26 (2011-2012) 23

James Bessen & Michael J. Meurer, *The Direct Costs from NPE Disputes*, B.U. School of Law Working Paper No. 12-34 (June 28, 2012) 21, 22

James Bessen & Michael J. Meurer, *The Private Costs of Patent Litigation*, 9 J.L. Econ. & Pol'y 59 (2012) 23

TABLE OF AUTHORITIES—Continued

Page(s)

Brief of Appellant, *Brooks Furniture Mfg., Inc.* v. *Dutailier Int'l Inc.*, 393 F.3d 1378 (Fed. Cir. 2005), 2003 WL 24305402 18

Brief of Appellee, *Brooks Furniture Mfg., Inc.* v. *Dutailier Int'l Inc.*, 393 F.3d 1378 (Fed. Cir. 2005), 2003 WL 24305403 18

Douglas A. Cawley, *District Court Patent Case Management Post-AIA*, 14 Sedona Conf. J. 77 (2013) 25

Colleen V. Chien, *Patent Trolls by the Numbers*, Patently-O Blog, http://www.patentlyo.com/patent/2013/03/chien-patent-trolls.html 27

Colleen V. Chien, *Reforming Software Patents*, 50 Hou. L. Rev. 325 (2012) 28

P.J. Federico, *Commentary on the New Patent Act*, 75 J. Pat. & Trademark Off. Soc'y 161 (1993) 10

Bronwyn Hall *et al.*, *A Study of Patent Thickets* (Nat'l Inst. of Econ. & Soc. Res. 2012) 26

Jay P. Kesan & Andres A. Gallo, *Why "Bad" Patents Survive in the Market and How Should We Change?*, 55 Emory L.J. 61 (2006) 26

Jay P. Kesan & Gwendolyn G. Ball, *How Are Patent Cases Resolved? An Empirical Examination of the Adjudication and Settlement of Patent Disputes*, 84 Wash. U. L. Rev. 237 (2006) 23, 24

TABLE OF AUTHORITIES—Continued

Page(s)

Patstats, *U.S. Patent Litigation Statistics* (Sept. 18, 2013), http://patstats.org/Patstats3.html 21

Hon. Randall R. Rader *et al.*, *Make Patent Trolls Pay in Court*, N.Y. Times, June 4, 2013 ..... 27, 28

Hon. Randall R. Rader, *The State of Patent Litigation*, 21 Fed. Cir. B. J. 331 (2012) 28

Reply Brief of Appellant, *Brooks Furniture Mfg., Inc.* v. *Dutailier Int'l Inc.*, 393 F.3d 1378 (Fed. Cir. 2005), 2003 WL 24305404 18

David Rosenberg & Steven Shavell, *A Model in Which Suits Are Brought for Their Nuisance Value*, 5 Int'l Rev. L. & Econ. 3 (1985) 28

Carl Shapiro, *Navigating the Patent Thicket: Cross Licenses, Patent Pools, and Standard Setting*, in *Innovation Policy & the Economy* 119 (A.B. Jaffe *et al.*, ed. 2001) 26

U.S.P.T.O, *Performance and Accountability Report, FY 2012* (2012), http://www.uspto.gov/about/stratplan/ar/USPTOFY2012PAR.pdf 20

Webster's New Int'l Dictionary (2d ed. 1954) 6

IN THE

Supreme Court of the United States

NOS. 12-1184 & 12-1163

OCTANE FITNESS, LLC,

Petitioner,

v.

ICON HEALTH & FITNESS, INC.,

Respondent.

HIGHMARK INC.,

Petitioner,

v.

ALLCARE HEALTH MANAGEMENT SYSTEMS, INC.,

Respondent.

On Writs of Certiorari
to the United States Court of Appeals
for the Federal Circuit

BRIEF OF YAHOO! INC., THE NEW YORK TIMES COMPANY, NETAPP, INC., MEDTRONIC, INC., GENERAL MILLS, INC., EMC CORPORATION, AND BOSTON SCIENTIFIC CORPORATION AS *AMICI CURIAE* IN SUPPORT OF PETITIONERS

INTEREST OF *AMICI CURIAE*

Amici are leading U.S. companies (listed and described in Appendix A) that have broad intellectual property portfolios they use to offer valuable goods and ser-

vices to the American public.[1] Cumulatively, *amici* employ over 200,000 people; have a market capitalization of over $200 billion; and contribute to the Nation's economic versatility, resiliency, and growth.

Amici operate in diverse industries—from medical devices, to multimedia news, to food products, to high-tech data storage and management—and share a strong interest in protection for intellectual property that is robust, fair, and balanced. At the same time, they share a strong belief that the Federal Circuit's current approach to attorney's fees awards for prevailing defendants unnecessarily exposes them to infringement claims that, despite their lack of merit, impose enormous legal costs and divert *amici*'s attention from the business of innovation to the management of litigation.

The Patent Act authorizes district courts to "award reasonable attorney fees to the prevailing party" in "*exceptional cases*." 35 U.S.C. § 285 (emphasis added). For decades, courts of appeals—including the Federal Circuit—interpreted that provision flexibly to permit district courts to shift fees whenever the particular facts made it grossly unjust or inequitable for the prevailing party to bear its own fees. But the Federal Circuit in recent years has restricted district courts' ability to award fees to defendants, imposing an overly stringent two-part test that is incompatible with the statute's straightforward "exceptional case" threshold. The Federal Circuit's over-

---

[1] Pursuant to Supreme Court Rule 37.6, counsel for *amici curiae* states that no counsel for a party authored this brief in whole or in part or made a monetary contribution to the preparation and submission of this brief, and no person other than *amici*, their members, or their counsel made such a contribution. All parties consented to the filing of this brief. Copies of the letters granting consent have been filed with the Clerk.

demanding standard does too little to dissuade plaintiffs with dubious claims; nor does it seriously deter aggressive practices that drive up defense costs. And it creates an imbalance by making it more difficult for defendants to obtain fees than plaintiffs. A proper construction of § 285 would help restore greater balance to the patent system. The possibility of recovering fees in appropriate cases would encourage defendants to resist weaker cases. That would, in turn, improve patent quality by "culling" dubious patents through invalidity rulings.

Amici have participated in other cases addressing similar issues and have testified before Congress on patent reforms. As both owners of intellectual property and targets of infringement lawsuits, *amici* have a balanced perspective on, and unique insights into, ensuring an appropriate construction of § 285 that respects its text and history. Properly construed, § 285 should provide district courts with the necessary flexibility to award fees and avoid gross injustice as the facts and circumstances warrant.

SUMMARY OF ARGUMENT

I. Section 285 of the Patent Act states that a district court "may award reasonable attorney fees to the prevailing party" in "exceptional cases." That provision gives district courts three guideposts to follow. It allows district courts to shift fees when a case is "exceptional," which means "uncommon" or "extraordinary." It requires prevailing plaintiffs and defendants to be treated equally. And it grants trial courts discretion to determine both whether to grant fees in the first instance and, if so, in what amount. The Federal Circuit's current approach—which precludes fees from being awarded against the patentee unless (a) the suit is brought in sub-

jective bad faith *and* (b) the litigation is objectively baseless—departs from those critical guideposts.

When Congress enacted § 285 in 1952, it codified a preexisting body of patent precedent that consistently permitted district courts to award fees to prevailing plaintiffs or defendants whenever that would avoid a gross injustice. For decades after § 285's enactment, no court of appeals required a showing of both objective baselessness and subjective bad faith. To the contrary, for decades, the federal courts, including the Federal Circuit, consistently accorded district courts flexibility to award fees where justice so required. The Federal Circuit erred when, in 2005, it departed from that longstanding approach and required both objective baselessness and subjective bad faith as a prerequisite to fee awards against patentees.

That rigid, two-part test also leads to perverse incentives. It allows claims that are *either* frivolous *or* pursued in bad faith to go unaddressed. Rather than remedy those deficiencies, the Federal Circuit has created an exception for fee-shifting in cases involving litigation misconduct or misconduct in securing a patent. Creating special categories with separate standards finds no basis in the statute itself, which allows a fee award in any exceptional case. And a judicially created "litigation misconduct" category deters fee awards and encourages unproductive accusations.

II. The Federal Circuit's approach results in differential treatment of prevailing plaintiffs and defendants. By holding prevailing defendants to a higher evidentiary standard to justify a fee award, the Federal Circuit exacerbates an already uneven landscape where plaintiffs can bring infringement claims with little downside risk and the potential for rich damages awards, while defendants

face immense risks and virtually no potential to recover even their costs. Patent infringement litigation is inherently expensive and time-consuming to defend. Those considerations often force defendants to settle, even where a patentee's claims are weak. As a result, nuisance suits have become commonplace and "junk" patents proliferate. Restoring the flexible standard that prevailed before 2005 would go a long way toward reestablishing balance to our patent system.

III. For over half a century, courts of appeals applying § 285 respected its language, reviewing district court fee awards for abuse of discretion. This Court, in analogous situations, has similarly held that an abuse-of-discretion standard should apply. The district court—which often lives with a lawsuit for years—is in a better position than an appeals court to assess all the facts and circumstances that would inform a decision to award fees. The Federal Circuit has upset that allocation of institutional prerogatives.

ARGUMENT

The presumption under the "American rule" is that each party bears its own legal fees and costs. Departing from that rule, Congress authorized district courts in patent cases to award attorney's fees to prevailing parties "in exceptional cases." 35 U.S.C. § 285. Properly construed, that standard affords a district court discretion to enter a fee award in favor of a plaintiff or defendant whenever it would be grossly unjust or inequitable for the prevailing party to bear its own costs. That standard is well-supported in the statutory text, the provision's history, and in related areas of law. And for decades, courts—including the Federal Circuit—properly understood and applied that standard with due regard for the individual circumstances of each case.

In recent years, however, the Federal Circuit has severely restricted the authority of district courts to enter fee awards in favor of defendants. "Absent misconduct in conduct of the litigation or in securing the patent," the Federal Circuit has ruled, fees cannot be awarded "against the patentee" unless "*both* (1) the litigation is brought in *subjective bad faith*, and (2) the litigation is *objectively baseless*." *Brooks Furniture Mfg., Inc.* v. *Dutailier Int'l Inc.*, 393 F.3d 1378, 1381 (Fed. Cir. 2005) (emphasis added). Those rigid requirements cannot be reconciled with the standard set forth in §285. They are incompatible with practice under §285's predecessor, decades of practice under §285 itself, and practice under parallel provisions in other areas of law. And they so restrict the availability of fees for prevailing defendants that §285 no longer serves its intended purpose.

I. SECTION 285'S CAPACIOUS "EXCEPTIONAL CASES" STANDARD ENCOMPASSES CIRCUMSTANCES WHERE FEE-SHIFTING AVOIDS INJUSTICE OR INEQUITY

A. "Exceptional Cases" Means "Exceptional Cases"—Not Just Cases That Are Both Objectively Baseless And Pursued In Subjective Bad Faith

For over 60 years, the Patent Act has provided that "[t]he court in exceptional cases may award reasonable attorney fees to the prevailing party." 35 U.S.C. §285. That succinct statutory directive provides three critical guideposts.

First, fees are to be awarded only in "exceptional cases." The word "exceptional" means "not ordinary; uncommon; rare." *Webster's New Int'l Dictionary* 889 (2d ed. 1954). "Exceptional" should thus be construed "to mean what the word is generally understood to indicate—uncommon, not run-of-the-mine." *Noxell Corp.* v.

Firehouse No. 1 Bar-B-Que Rest., 771 F.2d 521, 526 (D.C. Cir. 1985). It does not mean "subjective bad faith" or "objectively baseless" claims, let alone both. Because Congress "says in a statute what it means and means in a statute what it says," *Conn. Nat'l Bank* v. *Germain*, 503 U.S. 249, 253-254 (1992), "exceptional" means uncommon or extraordinary—neither more nor less.

While flexible, that standard fulfills a critical function. "Unlike Britain where counsel fees are regularly awarded to the prevailing party, it is the general rule in this country that unless Congress provides otherwise, parties are to bear their own attorney's fees." *Fogerty* v. *Fantasy, Inc.*, 510 U.S. 517, 533 (1994); see *Alyeska Pipeline Serv. Co.* v. *Wilderness Soc'y*, 421 U.S. 240, 247-262 (1975). By limiting fee awards to "exceptional" cases, Congress made clear that it was not making fee awards the norm or licensing ad-hoc departures in otherwise quotidian cases. Rather, Congress authorized fee awards where adhering to the traditional rule would result in "gross injustice" or similar inequity. See S. Rep. No. 79-1503, at 2 (1946).

Second, fees are available only to "prevailing parties," a well-known standard that equally encompasses prevailing defendants and plaintiffs. See *Farrar* v. *Hobby*, 506 U.S. 103, 109-112 (1992) (defining prevailing parties). The phrase "award a reasonable attorney's fee to the prevailing party" gives "no hint that successful plaintiffs are to be treated differently from successful defendants." *Fogerty*, 510 U.S. at 522. To the contrary, that text makes clear that "[p]revailing plaintiffs and prevailing defendants are to be treated alike." *Id.* at 534. Indeed, *Fogerty* invoked §285 itself as "support[ing] a party-neutral approach." *Id.* at 525 n.12. At least back when *Fogerty* was decided, courts applying §285 "generally

awarded attorney's fees in an evenhanded manner based on the same criteria," an outcome "[c]onsistent with the party-neutral language." *Ibid.* (citing *Eltech Sys. Corp.* v. *PPG Indus., Inc.*, 903 F.2d 805, 811 (Fed. Cir. 1990)).

Third, by providing that district courts "may" award fees to the prevailing party, § 285 affords courts latitude to identify, on a case-by-case basis, whether the circumstances justify a fee award. The word "may" implies discretion. See, *e.g.*, *United States* v. *Rodgers*, 461 U.S. 677, 706 (1983). That discretion is reinforced by the statutory directive that the court award a "reasonable attorney fee[ ]," rather than a fixed proportion—or the entirety—of the incurred fees. As in other contexts, district courts should survey the facts and circumstances to determine what is "reasonable," adjusting fees in relation to the reason for their imposition. See, *e.g.*, *Missouri* v. *McNeely*, 133 S. Ct. 1552, 1560 (2013).[2]

B. Pre-Enactment Practice Makes Clear That § 285 Permits Fee-Shifting As Appropriate To Avoid Injustice Or Inequity

Section 285's background and history confirm the broad flexibility Congress intended to provide. Far from writing on a clean slate when it enacted § 285, Congress acted against the backdrop of an established body of patent-law precedent, including judicial construction of § 285's predecessor. That backdrop demonstrates Congress's intent to vest courts with flexibility to award fees to defendants and plaintiffs alike in light of a range of

---

[2] For example, a district court may award partial fees where the fee is predicated on conduct in a specific phase of the litigation. See *Read Corp.* v. *Portec, Inc.*, 970 F.2d 816, 831 (Fed. Cir. 1992). A partial fee award may also be appropriate where a party prevails on only a subset of claims or defenses. Cf. *Beckman Instruments, Inc.* v. *LKB Produkter AB*, 892 F.2d 1547, 1554 (Fed. Cir. 1989).

equitable considerations. This Court generally presumes that Congress is aware of how courts have applied relevant legal concepts and, absent contrary evidence, that it intends to incorporate those existing understandings. See *Fitzgerald* v. *Barnstable Sch. Comm.*, 555 U.S. 246, 258-259 (2009); *Mac's Shell Serv., Inc.* v. *Shell Oil Prods. Co.*, 559 U.S. 175, 184-185 (2010). That presumption should control here.

1. Congress first authorized fee-shifting in patent cases when it enacted §285's predecessor in 1946. That provision declared that "[t]he court may in its discretion award reasonable attorney's fees to the prevailing party upon the entry of judgment on any patent case." 35 U.S.C. §70 (1946). By its plain terms, that provision was discretionary: It declared that a district court, on entering judgment, "may in its discretion" provide for fees. *Ibid.* Congress expected such awards to be granted when appropriate to "prevent a gross injustice to an alleged infringer." S. Rep. No. 79-1503, at 2 (1946).

Courts applying that provision understood and adhered to those boundaries. "[A]ttorneys' fees," they recognized, "are not to be allowed as a matter of course." *Associated Plastics Cos.* v. *Gits Molding Corp.*, 182 F.2d 1000, 1006 (7th Cir. 1950). Instead, fees could be granted only in the unusual case where failing to do so would result in gross injustice or similar inequity. As the Ninth Circuit summarized, fee shifting was appropriate upon

> a finding of *unfairness or bad faith* in the conduct of the losing party, *or some other equitable consideration of similar force*, which makes it *grossly unjust* that the winner of the particular law suit be left to bear the burden of his counsel fees which prevailing litigants normally bear.

Park-In-Theatres, Inc. v. *Perkins*, 190 F.2d 137, 142 (9th Cir. 1951) (emphasis added).

Courts, in some cases, "bad faith" alone was considered sufficient to shift fees, without reference to the validity of the infringement allegations. See *Turchan* v. *Cincinnati Milling Mach. Co.*, 208 F.2d 228, 229 (6th Cir. 1953). Other times, bad faith was defined broadly to encompass cases where "[t]he deficiency of the proof which the plaintiff offered at the trial could well have been taken as an indication of bad faith." *Algren Watch Findings Co.* v. *Kalinsky*, 197 F.2d 69, 72 (2d Cir. 1952). Regardless, the standard remained inherently flexible: District courts had wide discretion to determine the circumstances in which an award of fees would be justified to prevent "unfairness," compensate for "bad faith," or address any "other equitable consideration of similar force." *Park-In-Theatres*, 190 F.2d at 142.

2. Those understandings were incorporated into § 285. While this Court ordinarily presumes that Congress is aware of and intends to incorporate settled understandings, that presumption has special force here. P.J. Federico—the principal author of the 1952 Act and a chief patent examiner at the U.S. Patent & Trademark Office—explained that Congress intended to incorporate prior practice:

> Section 285, providing for the recovery of attorney fees by the prevailing party, is substantially *the same* as the corresponding sentence of the old statute, with the addition of 'in exceptional cases' *to express the intention of the old statute as shown by its legislative history and as interpreted by the courts.*

P.J. Federico, *Commentary on the New Patent Act*, 75 J. Pat. & Trademark Off. Soc'y 161, 216 (1993) (emphasis

added). Quoting that language, the Federal Circuit recognized early on that Congress intended §285 to be "substantially the same" as the prior fee-shifting provision. *Mach. Corp. of Am.* v. *Gullfiber AB*, 774 F.2d 467, 471 (Fed. Cir. 1985).

Nothing in the text of §285's predecessor incorporated a rigid, two-part requirement of "subjective bad faith" and "objective baselessness." Nothing in "its legislative history" counseled such a standard. Nor was there any suggestion that §285's predecessor, as "interpreted by the courts," had been construed to incorporate such requirements. And nothing supports superimposing that two-part requirement on §285 here.

C. The Federal Circuit's Current Test Departs From The Standard Applied In Other Circuits And, Until 2005, In The Federal Circuit Itself

For decades, courts applying §285—including the Federal Circuit—adhered to and successfully applied §285's flexible "exceptional case" standard directly, awarding fees whenever requiring the prevailing party to cover its own fees would result in gross inequity. In 2005, however, the Federal Circuit departed from the statutory guideposts and pre-enactment practice, adopting a rigid, two-part test to determine when defendants may recover fees. In *Brooks Furniture*, the court declared that "[a]bsent misconduct in conduct of the litigation or in securing the patent," attorney's fees "may be imposed *against the patentee only if both* (1) the litigation is brought in *subjective bad faith, and* (2) the litigation is *objectively baseless*." 393 F.3d at 1381.

That departure from the prior, flexible standard in favor of a rigid, two-pronged rule has no basis in the text of §285. The broad standard of "exceptional cases" nowhere suggests a strict requirement that a prevailing

party prove bad faith *and* objective baselessness to justify a fee award. Nor can that two-part test be reconciled with pre-enactment practice.[3] In fact, in announcing that test, the Federal Circuit departed from its own precedents and from the standards in related areas of law.

1. For decades, courts applied §285 consistent with prior practice and Congress's intent. Shortly after the Patent Act's enactment in 1952, for example, the Ninth Circuit explained that §285—like its predecessor—authorized fee awards based on "unfairness or bad faith in the conduct of the losing party" or any "equitable consideration of similar force" that would make it "grossly unjust" for each side to bear its own fees. *Shingle Prod. Patents, Inc.* v. *Gleason*, 211 F.2d 437, 441 (9th Cir. 1954). In *Shingle Product Patents*, the court found bad faith because the patentee "knew or should have known that the patents were invalid," a finding reinforced by the fact that the plaintiff was "set up as an asset-less corporation by the real parties in interest solely for the purpose of bringing harassing suits without liability to the real parties." *Ibid.* Other courts reached similar results. See, *e.g.*, *Colortronic Reinhard & Co., K.G.* v. *Plastic Controls, Inc.*, 668 F.2d 1, 8 (1st Cir. 1981); *Arbrook, Inc.* v. *Am. Hosp. Supply Corp.*, 645 F.2d 273, 279 (5th Cir. 1981); *Stillman* v. *Edmund Scientific Co.*, 522 F.2d 798, 800 (4th Cir. 1975); see Alan M. Ahart, *Attorneys' Fees: The Patent Experience*, 57 J. Pat. Off. Soc'y 608, 631-632

---

[3] Indeed, the Federal Circuit's current test renders §285 largely redundant in light of Rule 11, which authorizes fee awards as a sanction under a similar standard. See *ICU Med., Inc.* v. *Alaris Med. Sys., Inc.*, 558 F.3d 1368, 1381 (Fed. Cir. 2009) (Rule 11 sanctions evaluated under "a two-prong inquiry to determine (1) whether the complaint [or relevant document] is legally or factually 'baseless' from an objective perspective, and (2) if the attorney has conducted 'a reasonable and competent inquiry' before signing and filing it").

(1975) (noting the wide variety of circumstances where fees were shifted to an alleged infringer).

From its creation in 1982 until 2005, the Federal Circuit applied §285 in a similarly flexible fashion. For years, the Federal Circuit's lodestar for fee awards was whether there was "'some * * * equitable consideration * * * which makes it *grossly unjust* that the winner of the particular law suit should be left to bear the burden of his counsel fees.'" *Gullfiber AB*, 774 F.2d at 471 (quoting *Park-In-Theatres*, 190 F.2d at 142 (emphasis added)). The court nowhere insisted on a showing of bad faith and objective baselessness. Indeed, it allowed alleged infringers to recover attorney's fees from patentees based on gross negligence, *id.* at 473, or recklessness, *Eltech*, 903 F.2d at 811.

2. When construing the patent laws, this Court often consults other areas of intellectual property law. See, *e.g.*, *eBay Inc.* v. *MercExchange, L.L.C.*, 547 U.S. 388, 392 (2006). Here, the fee-shifting provision in the trademark statute parallels §285. It too states that "[t]he court in exceptional cases may award reasonable attorney fees to the prevailing party." 15 U.S.C. §1117.

As petitioner explains, the Federal Circuit's imposition of its two-prong test conflicts with every regional court of appeals' application of the identically worded fee-shifting provision in the trademark statute. See Pet. Br. 29-34. No court interprets the "exceptional case" language in the trademark statute to require a showing of both objective baselessness and subjective bad faith. That the Federal Circuit stands alone in its approach speaks volumes.

D. The Federal Circuit's Standard Is Contrary To Systemic Interests

The Federal Circuit's standard is not merely contrary to text and history. It is also inconsistent with sound principles of judicial administration. The Federal Circuit's conjunctive test—which requires *both* subjective bad faith *and* objective baselessness—does not identify "exceptional" cases so much as it produces inequitable results. A plaintiff bringing a case in subjective bad faith *will not* pay its opponent's fees so long as the claim is not totally baseless—so long as there is a scintilla of merit. And even extreme over-reaching and assertion of baseless claims will not result in fee-shifting absent a clear-and-convincing showing of the patentee's subjective bad faith. Defendants like *amici* are thus forced to spend millions of dollars defending objectively baseless or harassing lawsuits without any significant likelihood that they will be reimbursed for mounting a successful defense.

Perhaps recognizing that its two-part test departs from the statute's text and encourages inappropriate results, the Federal Circuit has attempted to limit its scope. *Brooks Furniture*'s twin requirements, the Federal Circuit has emphasized, do not apply when fees are sought for "misconduct in conduct of the litigation or in securing the patent." 393 F.3d at 1381; see, *e.g.*, *Monolithic Power Sys., Inc.* v. *O2 Micro Int'l Ltd.*, 726 F.3d 1359, 1366 (Fed. Cir. 2013) (because "it is only absent litigation misconduct or misconduct in securing the patent that we require the finding of both 'bad faith' and 'objectively baseless' litigation," "litigation misconduct alone may suffice to make a case exceptional"); *Eon-Net LP* v. *Flagstar Bancorp*, 653 F.3d 1314, 1324 (Fed. Cir. 2011) (similar).

But that new emphasis on litigation misconduct merely exacerbates the initial error.[4]

For one thing, that approach creates additional, special categories, each with its own separate standard. The *filing* of a lawsuit can result in fee-shifting only if *Brooks Furniture*'s two-part bad-faith/objective-baselessness test is met, while *litigation misconduct* or *misconduct in securing a patent* can result in fees under a *different standard*. But §285 merely directs courts to examine whether the case is sufficiently "exceptional" so as to warrant fees. It does not provide a grid that identifies different justifications for fees—the filing of a marginal suit, "litigation misconduct" in prosecuting a suit, "misconduct in securing a patent"—each with different requirements. Worse, the (judicially created) "litigation misconduct" exception to the (also judicially created) two-part *Brooks Furniture* test deters otherwise justified fee awards. Many courts may be reluctant to impugn the reputation of counsel—with potentially lasting effects—by finding "litigation misconduct." Nothing in §285 evinces Congress's intent to limit fee awards to courts that are more willing to make findings with potentially grave reputational impacts.

Nor is such a limit warranted. There may well be times where plaintiff's counsel makes a strategic decision that imposes unjustified costs on defendants. A plaintiff, for example, may delay narrowing its suit from hundreds of asserted claims to the handful it will assert at trial, prolonging discovery and imposing significant costs on

---

[4] For those reasons, this case resembles *KSR Int'l Co.* v. *Teleflex, Inc.*, 550 U.S. 398 (2007). To the extent the Federal Circuit has announced flexibility at the outer edges of its application of §285, that "do[es] not correct the errors of law made by the Court of Appeals in this case." *Id.* at 422.

defendants. Or it may assert extraordinarily broad claim constructions, requiring extensive discovery on current and past products, as well as expert reports on industry understanding of specific terms and lengthy *Markman* hearings. Such tactics may justify fee-shifting to prevent plaintiffs from imposing the gross injustice that results when the costs of marginal strategic decisions are externalized onto innocent defendants. But one need not label that strategic decision "misconduct" for fees to be warranted. If the case is "exceptional," that is enough.

The separate "litigation misconduct" category is also problematic for counsel. Practice under § 285's predecessor—and decades of practice under § 285 itself—permitted fees to be awarded if equity so required under the circumstances; there was no requirement that opposing counsel's conduct or motives be attacked or impugned. The Federal Circuit's recent cases, by contrast, encourage—and require courts to adjudicate—attacks by counsel on each other. Such accusations are damaging to the legal profession. Cf. *Therasense, Inc.* v. *Becton, Dickinson & Co.*, 649 F.3d 1276, 1289 (Fed. Cir. 2011) (en banc) (lamenting "an absolute plague" that results when "[r]eputable lawyers seem to feel compelled to make the charge against other reputable lawyers on the slenderest grounds, to represent their client's interests adequately, perhaps" (quotation marks omitted)). When such accusations are leveled with regularity, the reputation and integrity of the entire system suffers.

Successful defendants seeking to avoid a gross injustice for their clients should not be required to resort to name-calling to obtain fees. Nor should trial courts be reduced to doing likewise to award them. Some strategic calls by plaintiff's counsel may impose large costs on defendants while falling short of "litigation misconduct."

Such choices should be sufficient, in appropriate circumstances, to render the case "exceptional." If requiring the plaintiff to internalize the costs of its own strategic choices is necessary to avoid a gross injustice—misconduct or not—fees should be available.

II. The Federal Circuit's Standard Creates Inappropriate And Imbalanced Incentives

The Federal Circuit's standard results in imbalanced incentives, subjecting infringement defendants to disfavored treatment and undermining the goals § 285 was designed to serve.

A. The Federal Circuit's Standard Imposes Asymmetrical Burdens That Disfavor Defendants

Congress codified a singular standard in § 285: If the case is "exceptional," the district court may award fees to "the prevailing party." As explained above, that text does not differentiate between plaintiffs and defendants. See pp. 7-8, *supra*. And this Court has held that very similar language in the Copyright Act—that a trial court may "award a reasonable attorney's fee to the prevailing party"—dictates that "[p]revailing plaintiffs and prevailing defendants are to be treated alike." *Fogerty*, 510 U.S. at 533-534.

The Federal Circuit's 2005 decision in *Brooks Furniture* defied that directive when, rather than adhering to the statutory text, it restricted fee awards in favor of defendants by imposing a two-prong "subjective bad faith" and "objectively baseless" standard borrowed from the definition of "sham litigation" announced in *Professional Real Estate Investors, Inc.* v. *Columbia Pictures Industries, Inc.*, 508 U.S. 59 (1993) ("*PREI*"). See *Brooks Furniture*, 393 F.3d at 1381-1382. As petitioner explains, see Pet. Br. 22-25, the First Amendment concerns underlying *PREI* are inapposite in the context of fee-shifting

statutes like §285. Indeed, no party in *Brooks Furniture* even cited *PREI*—which does not address patent infringement or involve a fee-shifting statute—in the Federal Circuit briefing. See Br. of Appellant, 2003 WL 24305402 (Fed. Cir. July 14, 2003); Br. of Appellee, 2003 WL 24305403 (Fed. Cir. Aug. 20, 2003); Reply Br. of Appellant, 2003 WL 24305404 (Fed. Cir. Sept. 5, 2003). And this Court has made clear that the First Amendment right to petition at issue in *PREI* does not invalidate "statutory provisions," like §285, "that merely authorize the imposition of attorney's fees on a losing plaintiff." *BE & K Constr. Co.* v. *NLRB*, 536 U.S. 516, 537 (2002).

This Court's holding in *PREI* is not merely irrelevant to §285. It also squarely contradicts the statute's policy of treating plaintiffs and defendants equally. *PREI*'s deliberately narrow "sham litigation" exception is designed to protect parties exercising their right to petition for redress of grievances—those filing suit—from damages liability. It thus *protects plaintiffs* from adverse consequences for asserting claims. By importing that (inapposite) plaintiff-protective standard into §285—to determine when fees "may be imposed against the patentee"—the Federal Circuit predictably departed from §285's policy of treating plaintiffs and defendants equally. Instead, the Federal Circuit adopted a standard designed to favor plaintiffs.

That is precisely what the Federal Circuit's standard does in practice. The Federal Circuit ordinarily will not permit fees to be imposed *on a defendant* unless it *willfully infringed* the patent. See *In re Seagate Tech., LLC*, 497 F.3d 1360, 1371 (Fed. Cir. 2007) (en banc). According to the Federal Circuit, "willful infringement" comprises an objective element and a subjective element, and each element is purportedly equivalent to the corresponding

prong of the *Brooks Furniture* test. But that equivalence breaks down under scrutiny. Each of the prongs of the willful infringement test in practice requires patentees to meet a much less stringent standard to obtain a fee award. See Pet. Br. 28-29.

Plaintiffs and defendants also face radically different consequences from patent litigation. Patentees asserting baseless claims risk, at most, a fee award. If the (lower) standard of willful infringement is met, defendants face not merely a fee award but enhanced damages, up to a treble damages award, as well. See 35 U.S.C. §§ 284-285. The prevailing plaintiff thus is offered a pot of gold at the end of the rainbow; but the "prevailing defendant who has been wrongfully charged" is offered only the possible "recovery of attorney fees." *Scotch Whisky Ass'n* v. *Majestic Distilling Co.*, 958 F.2d 594, 600 (4th Cir. 1992).

That unequal standard undermines important interests. As this Court explained in the copyright context:

> Because copyright law ultimately serves the purpose of enriching the general public through access to creative works, it is peculiarly important that the boundaries of copyright law be demarcated as clearly as possible. To that end, defendants who seek to advance a variety of meritorious copyright defenses should be encouraged to litigate them to the same extent that plaintiffs are encouraged to litigate meritorious claims of infringement.

Fogerty, 510 U.S. at 527. That same interest is present here: Parties accused of infringement with plausible defenses should be encouraged to litigate and thereby spare the public the burden of repeat lawsuits based on overly broad constructions or potentially invalid patents. A ruling that narrows a patent's scope or invalidates the patent does not accrue merely to the benefit of the defen-

dant who obtains it. It clears the patent out of the way of other innovators, who may claim the benefit of the ruling despite not having been party to the suit. See *Blonder-Tongue Labs., Inc.* v. *Univ. of Ill. Found.*, 402 U.S. 313 (1971).

This Court has repeatedly encouraged meritorious challenges to weak patents, removing unwarranted barriers to potential defendants seeking to have a patent declared invalid. For example, the Court rejected the Federal Circuit's rigid "teaching, suggestion, or motivation" test and provided lower courts more flexibility in finding patents obvious under § 103 of the Patent Act. *KSR Int'l Co.* v. *Teleflex Inc.*, 550 U.S. 398 (2007). A party may challenge the validity of a patent it has licensed without first repudiating the license. *MedImmune, Inc.* v. *Genentech, Inc.*, 549 U.S. 118 (2007). The Court should likewise clear away the Federal Circuit's overly restrictive reading of § 285, so defendants will once again have an incentive to defend, and obtain fees, in appropriate cases.

Providing an appropriate incentive to defend is particularly critical when the defendant contests validity based on prior art. Because examiners at the PTO face a mountainous backlog of patent applications,[6] overburdened examiners may not have the ability to conduct a time-consuming and resource-intensive search for invalidating prior art. Instead, our patent system leaves that task to private litigants, who "may often be the only individuals with enough economic incentive to challenge the patentability of an inventor's discovery." *Lear, Inc.* v.

---

[6] See U.S.P.T.O., *Performance and Accountability Report, FY 2012* at 176-177 (2012), http://www.uspto.gov/about/stratplan/ar/USPTOFY2012PAR.pdf (565,566 patent applications filed in fiscal year 2012, contributing to cumulative backlog of 1.16 million pending applications).

Adkins, 395 U.S. 653, 670 (1969). An overly stringent application of §285 threatens the incentive for defendants to fulfill that important role.

B. Flexibility Is Needed To Deter Plaintiffs From Externalizing Costs

Patent infringement litigation imposes enormous costs on defendants. Not only does it require expensive outlays to present a defense. It also redirects corporate officers, key technical innovators, and other critical company employees from their focus on innovation and customer service to the business of litigation. The Federal Circuit's rigid approach to fees does little to prevent or even moderate those costs, and much to exacerbate them.

1. Patent Litigation Is Extraordinarily Costly

In 2012, 5,778 patent cases were filed in federal district courts against 12,627 named defendants. See Patstats, *U.S. Patent Litigation Statistics* (Sept. 18, 2013), http://patstats.org/Patstats3.html. For defendants, getting to judgment on the merits is a costly proposition. One study concluded that average legal costs in 2011—fees paid to "outside counsel (lead and local), experts, discovery costs, prior art searching, jury consultants, graphics, other expenses, and other related costs"—were roughly $1.5 million per defense for large companies and $420,000 for small/medium companies. James Bessen & Michael J. Meurer, *The Direct Costs from NPE Disputes*, B.U. School of Law Working Paper No. 12-34, at 12 (June 28, 2012). A survey conducted by the American Intellectual Property Law Association indicated that, for infringement cases involving potential damages of $1 million to $25 million, the mean cost of defense is $1.6 million through discovery and $2.8 million through trial. *Id.* at 14 n.15, tbl. 2 (reporting results). For cases involving amounts in controversy exceeding $25 million, the mean

costs of defending through discovery and trial are $3.6 million and $6 million, respectively. *Ibid.*

Companies accused of patent infringement have little prospect of ending a case with a motion to dismiss. Threadbare allegations are often sufficient.[6] And "demonstrating entitlement to summary judgment in a patent case tends to be particularly difficult because patent disputes are generally very fact intensive." *Schoenhaus* v. *Genesco, Inc.*, 351 F. Supp. 2d 320, 323 (E.D. Pa. 2005), *aff'd*, 440 F.3d 1354 (Fed. Cir. 2006).

Even getting to summary judgment can require years of litigation, with significant outlays of monetary and other resources. "Patent infringement analysis involves two steps: the threshold construction of the meaning and scope of the asserted claim, followed by the determination whether the accused product infringes the properly construed claim." *Athletic Alts., Inc.* v. *Prince Mfg., Inc.*, 73 F.3d 1573, 1578 (Fed. Cir. 1996). Accused infringers thus must litigate the meaning of the claims; endure extensive and often overly broad discovery about their products; and litigate the degree to which the patentee's claims map onto their products. Prior art searches related to validity can cost hundreds of thousands of dollars. Local rules may impose additional burdens, requiring invalidity contentions, infringement and non-infringement contentions, and other exacting work prod-

---

[6] For example, a plaintiff is excused from (1) "specifically includ[ing] each element of the claims of the asserted patent" in its complaint, *Phonometrics, Inc.* v. *Hospitality Franchise Sys., Inc.*, 203 F.3d 790, 794 (Fed. Cir. 2000), (2) "identify[ing] an accused device by name," *K-Tech Telecomm., Inc.* v. *Time Warner Cable, Inc.*, 714 F.3d 1277, 1286 (Fed. Cir. 2013), and (3) alleging "what device" purportedly infringed the asserted patent or "what mechanism" or "means" the defendant allegedly used in infringing, *McZeal* v. *Sprint Nextel Corp.*, 501 F.3d 1354, 1357-1358 (Fed. Cir. 2007).

uct before accused infringers can even seek a decision on the merits. See, *e.g.*, E.D. Tex. Pat. R. 3-1 to -4, 4-1 to -4; N.D. Ill. Pat. R. 2.3-2.5, 3.1-3.3, 4; D.N.J. Pat. R. 3.2A-3.4, 4.

One study found that, in 1995, obtaining summary judgment on invalidity required an average of 714 days and 187 filings with the court. Jay P. Kesan & Gwendolyn G. Ball, *How Are Patent Cases Resolved? An Empirical Examination of the Adjudication and Settlement of Patent Disputes*, 84 Wash. U. L. Rev. 237, 310 (2006). By 2000, those numbers increased to 874 days and 221 filings. *Ibid.* In the meantime, companies accused of infringement endure years of document gathering and production, employee depositions, and other distractions from their operational activities—not to mention the ongoing potential for disruption to vendor and customer relationships that can result from an infringement claim and the attendant threat of an injunction. James Bessen & Michael J. Meurer, *The Private Costs of Patent Litigation*, 9 J.L. Econ. & Pol'y 59, 60 (2012); James Bessen *et al.*, *The Private and Social Costs of Patent Trolls*, 34 Regulation 26, 31 (2011-2012); see also *eBay*, 547 U.S. at 396 (Kennedy, J., concurring) ("[A]n injunction * * * can be employed as a bargaining tool to charge exorbitant fees to companies that seek to buy licenses to practice the patent."). For those reasons, litigation of this sort deters investments in innovation. Products frequently "require customers to make complementary investments; they may not be willing to make these investments if a lawsuit poses some risk that the product will be withdrawn from the market." Bessen *et al.*, *The Private and Social Costs of Patent Trolls*, *supra*, at 31.

2. *The Federal Circuit's Standard Encourages Marginal Claims And Aggressive Strategies*

Those large costs, and the uneven consequences that plaintiffs and defendants confront, give plaintiffs strong incentives to bet on weak claims, and defendants insufficient incentives to resist. See Kesan & Ball, *supra*, at 312. One study found that, from 1995 to 2000, "approximately 80% of patent cases settle[d]." *Id.* at 259. A later study of cases filed between 2000 and 2009 found that 84% of cases involving "once-litigated" patents (defined as those that had been litigated previously once before) ended up settling; for the "most-litigated patents" (defined as patents asserted in eight or more lawsuits during the study's period), 90.5% of the cases ended in settlement. John R. Allison *et al.*, *Patent Quality and Settlement Among Repeat Patent Litigants*, 99 Geo. L. J. 677, 689 (2011). By contrast, when claims asserted on the basis of the most-litigated patents reached judgment on the merits, those claims succeeded only 10.7% of the time, compared to a success rate of 26% across all patent lawsuits and 47.3% for once-litigated patents. *Id.* at 687. These data suggest that a typical patent settlement payment represents "not the acquisition of real legal rights but a nuisance settlement over a likely invalid patent." *Id.* at 709.

In *amici*'s experience, the current system provides plaintiffs with little reason not to bring weak suits—and little reason to hold the costs of litigation down. For example, many *amici* have been sued under a patent with a narrow written description that is clearly different from the products that *amici* sell. But the plaintiff has little reason to refrain from suing so long as it can find a broad claim term and use that to assert infringement. See *Boss Control, Inc.* v. *Bombardier Inc.*, 410 F.3d 1372, 1379

(Fed. Cir. 2005). Similarly, other *amici* have been charged with infringement even though their product plainly predates the priority date of the patent-in-suit. But the plaintiff again has little reason to hold back so long as it has some chance, however remote, of overcoming that barrier—or at least a hope that the costs of litigation will deter the defendant from litigating its defense to conclusion. Under the Federal Circuit's current exceptional-case standard, an alleged infringer would have little chance to recover fees even after successfully defending against such marginal suits.

The current standard also leads to unduly aggressive tactics. Patentees often assert "scores, or even hundreds," of claims at the outset of the case. Douglas A. Cawley, *District Court Patent Case Management Post-AIA*, 14 Sedona Conf. J. 77, 84-85 (2013). They assert infringement against hundreds of products, some never identified in the complaint. And they will often resist narrowing their suit at the outset, or until after discovery, when the case is relatively close to trial. *Ibid.*; see also *In re Katz Interactive Call Processing Patent Litig.*, 639 F.3d 1303, 1313 n.9 (Fed. Cir. 2011) (patentee asserted 1,975 claims and only reduced to 40 after discovery and upon order of trial court). That forces defendants to comb through their records and identify products, make non-infringement contentions for each product, and litigate and whittle down the claims. Under the current standard, however, a fee award is essentially off-limits unless the claim of infringement was both asserted in bad faith and objectively baseless. Properly construed, § 285 should allow district courts to require losing plaintiffs to internalize the costs of such strategic decisions in appropriate circumstances. See pp. 15-16, *supra*.

The public also pays the price when the high costs of defense allow junk patents to proliferate. The current system provides courts with few opportunities to invalidate bad patents (or to limit valid patents to their proper scope). That "create[s] an environment in which incorrectly issued patents survive in the market." Jay P. Kesan & Andres A. Gallo, *Why "Bad" Patents Survive in the Market and How Should We Change?*, 55 Emory L.J. 61, 85 (2006). The persistence of low-quality patents contributes to problems such as patent thickets, or "dense web[s] of overlapping intellectual property rights that a company must hack its way through in order to actually commercialize new technology." Carl Shapiro, *Navigating the Patent Thicket: Cross Licenses, Patent Pools, and Standard Setting*, in *Innovation Policy & the Economy* 119, 120 (A.B. Jaffe *et al.*, ed. 2001). Thickets of dubious patents can stifle innovation and deter new market entrants. Bronwyn Hall *et al.*, *A Study of Patent Thickets* 53 (Nat'l Inst. of Econ. & Soc. Res. 2012).

Those adverse consequences are exacerbated by the rise of firms that "use patents not as a basis for producing and selling goods but, instead, primarily for obtaining licensing fees." *eBay*, 547 U.S. at 396 (Kennedy, J., concurring). Unlike *amici*, such firms do not have commercial activities that can be disrupted by litigation; instead, litigation (and the threat of litigation) is central to their business. They do not have mountainous files about their products that must be produced; rather, they have no products and often will have few documents. They do not have to do expensive prior art searches; only defendants do that. And their officers and key technical employees are not distracted from their central goal—creating quality products and services for the public—to manage liti-

gation instead. Litigation for them is not a distracting cost of business; it is their business.

Certainly, many repeat patent litigants (including *amici*) have real products and productive business operations. But in the years since *Brooks Furniture*, there has been an explosion of litigation by non-practicing entities that benefit from the asymmetrical incentives embedded in the Federal Circuit's current standard for fee shifting. Whereas suits brought by such litigants accounted for less than a fifth of all patent cases a decade ago, they now account for 62%.[7]

C. This Court Should Restore §285 To Its Intended Scope So That It Can Serve Its Intended Purpose

"The only protection that parties in [defendants'] position have against abusive and frivolous litigation * * * is an award of counsel fees to the unjustly accused infringer." *Abraskin* v. *Entrecap Corp.*, 55 F. Supp. 2d 224, 229 (S.D.N.Y. 1999). But §285 no longer serves that purpose. "Many patent suits are brought these days with little chance of success." *Medtronic Navigation, Inc.* v. *BrainLAB Medizinische Computersysteme GmbH*, 603 F.3d 943, 967 (Fed. Cir. 2010) (Lourie, J., concurring). As long as plaintiffs can take comfort in the Federal Circuit's excessively demanding bad-faith/objective-baselessness standard, they can pursue marginal claims and aggressive litigation postures with little risk. Only a vanishing fraction of patent cases—approximately 0.6% in 2011—see any kind of fee-shifting. See Hon. Randall R. Rader *et al.*, *Make Patent Trolls Pay in Court*, The New York Times, June 4, 2013 at A25.

---

[7] Colleen V. Chien, *Patent Trolls by the Numbers*, Patently-O Blog, http://www.patentlyo.com/patent/2013/03/chien-patent-trolls.html.

Restoring §285 to its proper scope and flexibility would help strike a more sensible balance. It would give plaintiffs that bring sufficiently weak cases, or that externalize unnecessary costs on defendants, or that engage in conduct that otherwise makes the case "exceptional," reason to think twice before doing so. The risk of having to pay the defendant's fees—to avoid injustice—lowers the expected return for would-be plaintiffs, imposes downside risk, and encourages more balanced conduct. Colleen V. Chien, *Reforming Software Patents*, 50 Hou. L. Rev. 325, 369-374 (2012). It would also "discourage cases that are brought only to obtain revenue from litigation avoidance instincts." Hon. Randall R. Rader, *The State of Patent Litigation*, 21 Fed. Cir. B. J. 331, 344 (2012). "[T]he prospect of paying fees will discourage aggressive suits and frivolous demands." Rader *et al.*, *Make Patent Trolls Pay*, *supra*, at A25.

A properly balanced approach to §285 would also give defendants incentives to litigate when appropriate. A defendant that has a realistic chance of recovering some of its costs through a fee award is more likely to fight to judgment. David Rosenberg & Steven Shavell, *A Model in Which Suits Are Brought for Their Nuisance Value*, 5 Int'l Rev. L. & Econ. 3, 4 (1985); Chien, *Reforming Software Patents*, *supra*, at 372. Doing so would improve patent quality. Defendants currently have incentives to settle even if the patent is weak. But giving defendants an incentive to fight to judgment would help "cull" weak patents—invalidating them or restricting their scope—so they can no longer be used to keep innovative products out of the market or extract tribute from would-be innovators. In light of those important considerations, Congress provided a properly balanced approach in the flexible standard set forth in §285 itself. The Federal Circuit

upset the balance by substituting a rigid two-prong test for the standard Congress provided.

III. District Court Exceptional-Case Determinations Should Be Reviewed For Abuse Of Discretion

The pernicious effects of *Brooks Furniture* have been magnified by the Federal Circuit's refusal to accord district courts the deference that, under § 285, is their due.

A. Section 285's Text And History Support Review Under An Abuse-Of-Discretion Standard

Section 285 provides that district courts "may" award fees in exceptional cases. The term "may" by itself indicates that Congress intended to vest district courts with discretion. See *Rodgers*, 461 U.S. at 706 ("The word 'may,' when used in a statute, usually implies some degree of discretion."); see also *eBay*, 547 U.S. at 392 (district court decision to issue injunction under the Patent Act reviewed for abuse of discretion in part because the Act "expressly provides that injunctions 'may' issue 'in accordance with the principles of equity' "); p. 8, *supra*.

Section 285's origins make that conclusion unavoidable. Courts interpreting § 285's predecessor repeatedly emphasized the district court's discretion. *E.g.*, *Algren Watch Findings Co.* v. *Kalinsky*, 197 F.2d 69, 72 (2d Cir. 1952); *Turchan* v. *Cincinnati Milling Mach. Co.*, 208 F.2d 228, 229 (6th Cir. 1953). Courts interpreting § 285 before the Federal Circuit's creation did so as well. Time and again they reviewed district court fee-shifting decisions for abuse of discretion. See, *e.g.*, *Specmade Prods., Inc.* v. *Barnett*, 354 F.2d 229, 230 (5th Cir. 1966); *Campbell* v. *Spectrum Automation Co.*, 601 F.2d 246, 252 (6th Cir. 1979). Before *Highmark*, even the Federal Circuit reviewed a district court's "determin[ation] whether attorney fees are appropriate * * * for an abuse of discre-

tion." *Cybor Corp.* v. *FAS Techs., Inc.*, 138 F.3d 1448, 1460 (Fed. Cir. 1998) (en banc).[8] There is no reason to depart from that longstanding practice—and every reason not to.

B. This Court's Precedents Support Abuse-Of-Discretion Review

In *Cooter & Gell* v. *Hartmarx Corp.*, 496 U.S. 384 (1990), this Court addressed "the appropriate standard of appellate review of a district court's imposition of Rule 11 sanctions." *Id.* at 388. "Determining whether an attorney has violated Rule 11 involves a consideration of three types of issues." *Id.* at 399. "The court must consider factual questions regarding the nature of the attorney's prefiling inquiry and the factual basis of the pleading or other paper." *Ibid.* "Legal issues are raised in considering whether a pleading is 'warranted by existing law or a good faith argument' for changing the law and whether the attorney's conduct violated Rule 11." *Ibid.* And a court must "exercise its discretion to tailor an 'appropriate sanction.'" *Ibid.*

This Court concluded that "an appellate court should apply an abuse-of-discretion standard in reviewing *all*

---

[8] Before *Highmark*, the Federal Circuit stated that "[t]he determination of whether a case is exceptional and, thus, eligible for an award of attorney fees under § 285 is a two-step process." *Cybor Corp.*, 138 F.3d at 1460. First, "the district court must determine whether a case is exceptional, a factual determination reviewed for clear error." *Ibid.* Second, "[a]fter determining that a case is exceptional, the district court must determine whether attorney fees are appropriate, a determination that [the Federal Circuit] review[ed] for an abuse of discretion." *Ibid.* Both steps involved abuse-of-discretion review or its equivalent: "A district court abuses its discretion when its decision is based on *clearly erroneous findings of fact*, is based on erroneous interpretations of the law, or is clearly unreasonable, arbitrary or fanciful." *Ibid.* (emphasis added).

aspects of a district court's Rule 11 determination." 496 U.S. at 405 (emphasis added). It explained that, "[w]hen an appellate court reviews a district court's factual findings, the abuse of discretion and clearly erroneous standards are indistinguishable: A court of appeals would be justified in concluding that a district court had abused its discretion in making a factual finding only if the finding were clearly erroneous." *Id.* at 401. Otherwise, an appellate court should defer to those findings. The Court also "noted the difficulty of distinguishing between legal and factual issues." *Ibid.* Such an inquiry is "particularly difficult in the Rule 11 context" because a court must consider legal issues "rooted in factual determinations" that require a court to "consider all the circumstances of a case." *Ibid.* Two years earlier, the Court likewise held that fee awards under the Equal Access to Justice Act are reviewed for abuse of discretion. *Pierce* v. *Underwood*, 487 U.S. 552, 557-563 (1988).

For the same reasons, the abuse-of-discretion standard should apply to a district court's exceptional-case determination, regardless of the standard the district court uses. The district court is "better positioned" than an appellate court to make any legal determinations rooted in questions of fact. *Cooter & Gell*, 496 U.S. at 403. "District court judges live with these cases, often for many years," making them "better situated to review the evidence, hear the testimony and evaluate the parties' conduct, behavior, and positions in the litigation." No. 12-1163, Pet. App. 200a (Moore, J., dissenting from denial of petition for rehearing en banc).

The abuse-of-discretion standard, moreover, is consistent with other areas of the law where a district court's "special vantage point," *White* v. *Regester*, 412 U.S. 755, 769 (1973), counsels appellate restraint. For example,

the Lanham Act's fee-shifting provision is identical to §285. See 15 U.S.C. §1117(a)(3). Courts of appeals almost unanimously agree that a district court's decision under that provision should be reviewed for abuse of discretion.[9] The abuse-of-discretion standard regularly applies whenever—as with §285—a district court is supposed to "tak[e] all of the facts and circumstances into account." *FilmTec Corp.* v. *Hydranautics*, 67 F.3d 931, 938 (Fed. Cir. 1995); see, *e.g.*, *Gall* v. *United States*, 552 U.S. 38, 46 (2007) ("[T]he familiar abuse-of-discretion standard of review now applies to appellate review of sentencing decisions."); *Evans* v. *Jeff D.*, 475 U.S. 717, 742 (1986) ("[W]e shall rely primarily on the sound discretion of the district courts to appraise the reasonableness of particular class-action settlements on a case-by-case basis, in the light of all the relevant circumstances."); *Doran* v. *Salem Inn, Inc.*, 422 U.S. 922, 931-932 (1975) ("[T]he standard of appellate review is simply whether the issuance of the [preliminary] injunction, in the light of the applicable standard, constituted an abuse of discretion."). The same result is warranted here.

---

[9] *Int'l Star Class Yacht Racing Ass'n* v. *Tommy Hilfiger, U.S.A., Inc.*, 80 F.3d 749, 752 (2d Cir. 1996); *Securacomm Consulting, Inc.* v. *Securacom Inc.*, 224 F.3d 273, 279 (3d Cir. 2000); *Newport News Holdings Corp.* v. *Virtual City Vision, Inc.*, 650 F.3d 423, 441 (4th Cir. 2011), *cert. denied*, 132 S. Ct. 575 (2011); *Nat'l Bus. Forms & Printing, Inc.* v. *Ford Motor Co.*, 671 F.3d 526, 537 (5th Cir. 2012); *Johnson* v. *Jones*, 149 F.3d 494, 503 (6th Cir. 1998); *BASF Corp.* v. *Old World Trading Co.*, 41 F.3d 1081, 1099 (7th Cir. 1994); *Blue Dane Simmental Corp.* v. *Am. Simmental Ass'n*, 178 F.3d 1035, 1043 (8th Cir. 1999); *Nat'l Ass'n of Prof'l Baseball Leagues, Inc.* v. *Very Minor Leagues, Inc.*, 223 F.3d 1143, 1146 (10th Cir. 2000); *Tire Kingdom, Inc.* v. *Morgan Tire & Auto, Inc.*, 253 F.3d 1332, 1336 (11th Cir. 2001); *ALPO Petfoods, Inc.* v. *Ralston Purina Co.*, 913 F.2d 958, 971 (D.C. Cir. 1990). But see *Secalt S.A.* v. *Wuxi Shenxi Constr. Mach. Co.*, 668 F.3d 677, 687 (9th Cir. 2012).

CONCLUSION

The judgments of the Federal Circuit should be reversed.

Respectfully submitted.

JOHN M. WHEALAN
4613 Merivale Rd.
Chevy Chase, MD 20815
(202) 994-2195
Counsel for Amici Curiae

KEVIN T. KRAMER
Deputy General Counsel – Intellectual Property
YAHOO! INC.
701 First Ave.
Sunnyvale, CA 94089
Counsel for Yahoo! Inc.

LUKE DOHMEN
Chief Patent Counsel
BOSTON SCIENTIFIC CORP.
1 Scimed Place
Maple Grove, MN 55311
Counsel for Boston Scientific Corp.

KRISHNENDU GUPTA
Senior Vice President, Deputy General Counsel
EMC CORPORATION
176 South Street
Hopkinton, MA 01748
Counsel for EMC Corporation

JEFFREY A. LAMKEN
Counsel of Record
MARTIN V. TOTARO
MOLOLAMKEN LLP
The Watergate, Suite 660
600 New Hampshire Ave., NW
Washington, D.C. 20037
(202) 556-2000
jlamken@mololamken.com
Counsel for Amici Curiae

DOUGLAS LUFTMAN
Vice President, Innovation Services & Chief Intellectual Property Counsel
NETAPP, INC.
495 East Java Drive
Sunnyvale, CA 94089
Counsel for NetApp, Inc.

DAVID E. MCCRAW
Vice President & Assistant General Counsel
THE NEW YORK TIMES COMPANY
620 Eighth Avenue
New York, NY 10018
Counsel for The New York Times Company

CHAD HANSON, PH.D.
Senior Legal Counsel, IP Litigation
MEDTRONIC, INC.
710 Medtronic Parkway
LC300
Minneapolis, MN 55432
Counsel for Medtronic, Inc.

WILLIAM D. MILLER
Chief Intellectual Property Counsel
GENERAL MILLS, INC.
Number One General Mills Boulevard
Minneapolis, MN 55426
Counsel for General Mills, Inc.

DECEMBER 2013

APPENDIX

APPENDIX A
LIST OF *AMICI CURIAE*

Yahoo! Inc. ("Yahoo") is a global technology company with over 12,000 employees focused on making the world's daily habits inspiring and entertaining. It provides a variety of products and services, many of them personalized, including search, content, and communications tools on the Web and on mobile devices. Between 2010 and 2012 alone, Yahoo spent more than $2.8 billion developing new technology. See Yahoo! Inc. *Annual Report (Form 10K)*, at 9 (Feb. 28, 2013), http://www.sec.gov/Archives/edgar/data/1011006/000119312513085111/d442073d10k.htm#tx4420731. As the result of investing so heavily in research and innovation, Yahoo owns a valuable patent portfolio; it licenses a great many patented technologies as well.

The New York Times Company is a leading global, multimedia news and information company. It operates newspapers, runs digital businesses, and invests in paper mills. It has approximately 5,363 full-time employees. It depends on intellectual property to protect its brands, content, services, and internally developed technology. See The New York Times Co., *Annual Report (Form 10-K)*, at 12 (Feb. 28, 2013), http://investors.nytco.com/files/doc_financials/annual/2012NYTannual.pdf.

NetApp is a Fortune® 500 company that creates innovative storage and data management solutions and services that deliver outstanding cost efficiency and accelerate business breakthroughs. The world's leading companies rely on its solutions to achieve better economics, speed, and scale of business. Enterprises, midsize businesses, government organizations, and service providers deploying business applications, cloud, and shared virtualized solutions turn to NetApp for efficient and flexible

infrastructures. NetApp also is widely recognized for its 20-year tradition of innovation, including as one of the "World's Most Innovative Companies" (Forbes), a top 300 United States patent holder (Intellectual Property Owners Association), Top 25 largest patent holders in the Silicon Valley region (San Francisco Business Times) and the best "Quality Over Quantity" patent portfolio in its industry (IEEE Spectrum). See NetApp, *Thought Leadership*, http://www.netapp.com/us/company/leadership/index.aspx.

Medtronic, Inc. is the world's largest medical technology company. With over 46,000 employees, Medtronic has transformed healthcare worldwide, improving outcomes, expanding access, and enhancing value. Medtronic is a leading innovator in the field, and capitalizes on the intellectual property it generates. In fiscal year 2012, Medtronic filed 770 original patent applications in the United States. See Medtronic, *Collaborative Culture of Innovation*, http://www.citizenshipreport.medtronic.com/collaborative-culture-of-innovation/intellectual-property/index.htm.

General Mills, Inc. is one of the world's leading food companies, operating in more than 100 countries around the world. Its brands include Cheerios, Fiber One, Häagen-Dazs, Nature Valley, Yoplait, Betty Crocker, Pillsbury, Green Giant, Old El Paso, Wanchai Ferry, Yoki, and more. Headquartered in Minneapolis, Minnesota, General Mills had fiscal 2013 worldwide sales of $17.8 billion.

EMC Corporation is a global leader in cloud computing. It helps IT departments to store, manage, protect, and analyze information. EMC employs approximately 60,000 people worldwide. EMC invests substantially in

research and development—approximately $16.5 billion since 2003. EMC is supported by thousands of technical research and development employees, who help generate the industry's broadest portfolio of systems, software, and services. EMC, *EMC at a Glance*, http://www.emc.com/corporate/emc-at-glance/corporate-profile/index.htm.

Boston Scientific Corporation is a worldwide developer, manufacturer, and marketer of medical devices that are used in a broad range of interventional medical specialties. Founded in 1979, Boston Scientific currently has approximately 24,000 employees worldwide. Boston Scientific relies on patents to protect its intellectual property. As of December 31, 2012, Boston Scientific had more than 15,000 patents worldwide. See Boston Scientific Corp., *Annual Report (Form 10-K)*, at 13 (Feb. 22, 2013), http://www.sec.gov/Archives/edgar/data/885725/000088572513000007/a2012form10k.htm.